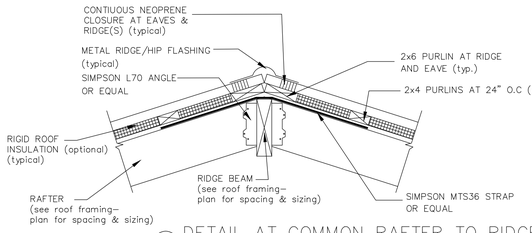

1 DETAIL AT COMMON RAFTER TO RIDGE BEAM
Scale: 1" = 1'-0"

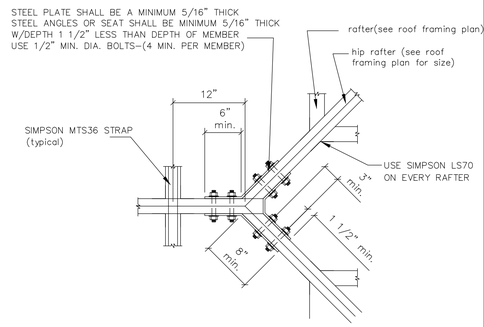

2 DETAIL AT RIDGE BEAM
Scale: 1" = 1'-0"

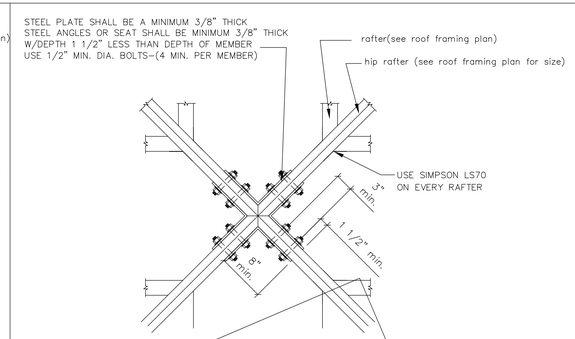

NOT APPLICABLE

3 DETAIL AT RIDGE APEX
Scale: 1" = 1'-0"

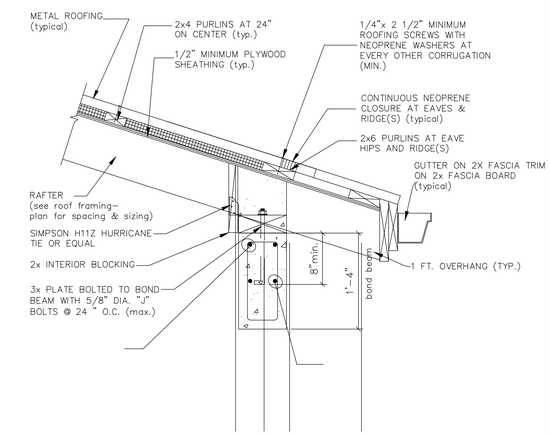

3 DETAIL AT END WALL ROOF CONNECTION
Scale: 1" = 1'-0"

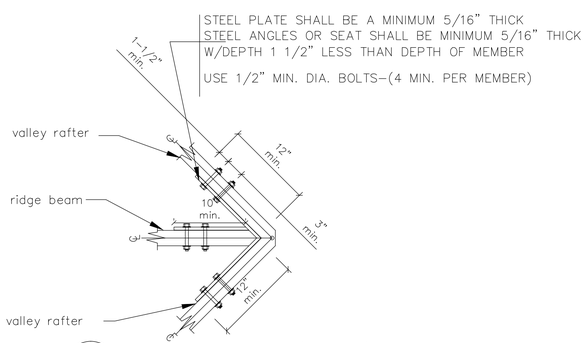

4 DETAIL AT VALLEY/RIDGE/VALLEY
SCALE: NTS

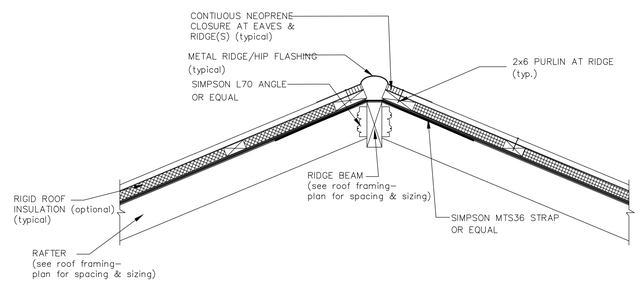

5 DETAIL AT COMMON RAFTER CONNECTION TO THE RIDGE BEAM
Scale: 1" = 1'-0"

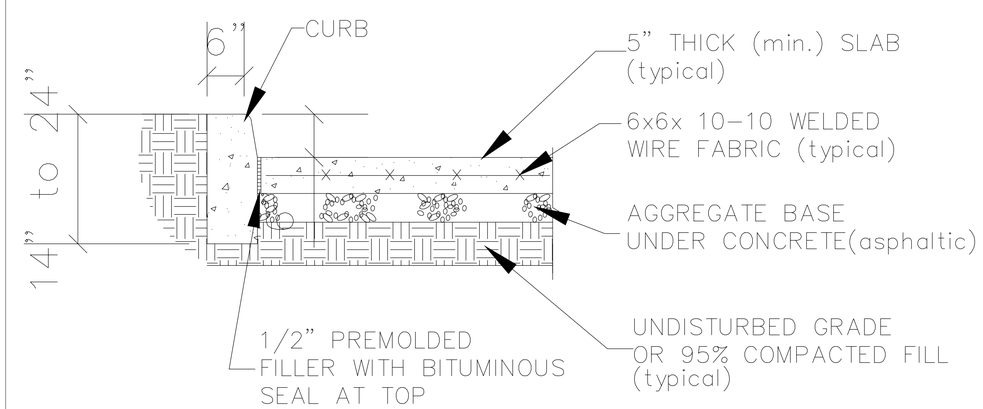

6 WALKWAY W/ CURB DETAIL

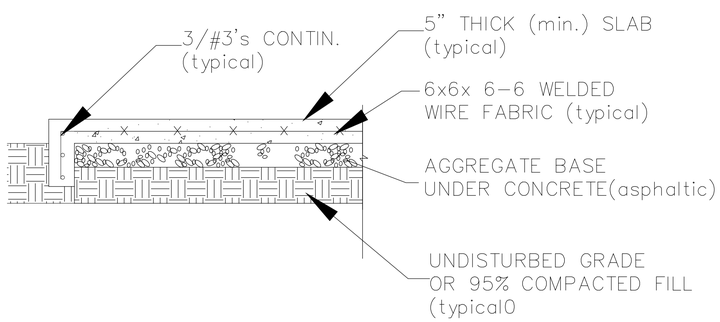

7 CONC. WALK WAY DETAIL
NTS

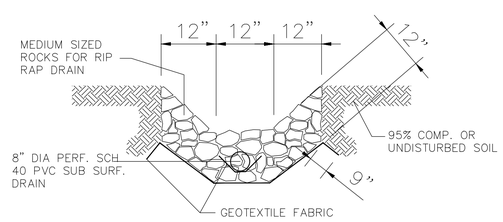

8 SECT. THRU RIP RAP DRY BED DRAIN

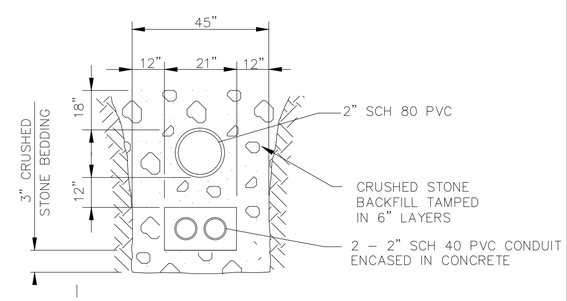

9 TYPICAL CONDUIT AND PIPE TRENCH DETAIL
NTS

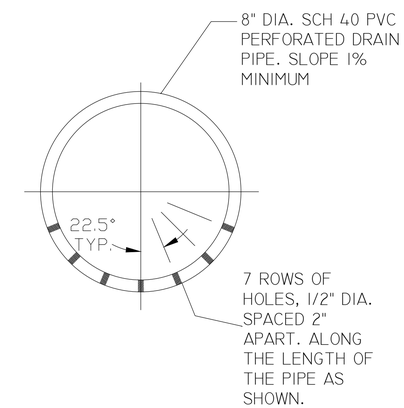

10 SUBSURFACE FRENCH
FRENCH DRAIN FRENCH
NTS

Caribbean Professional Consultants
P.O. BOX 305647
212 Bournefield
St. Thomas, U.S.V.I. 00802
Tel.: 340-690-7909
Email: dearc69@yahoo.com

REVISIONS

NO.	DATE	REMARKS

ROOF & SITE DETAILS

PROPOSED BATHROOM AND CONCESSION BUILDINGS
FOR: IEKHS TRACK & FIELD ATHLETIC FACILITY
OWNER: VIRGIN ISLANDS DEPARTMENT OF EDUCATION
No. 172 ESTATE NAZARETH, NO.1 RED HOOK QUARTER, STT USVI

DRAWN BY: LND
CHECKED BY: EJB
APPROVED BY: EJB
CONTRACT NO.: CONTRACT.NO.
PROJECT NO.: PROJ.NO.
DATE: DEC 15 2015

REGISTERED ARCHITECT
EDWARD J. BLASCH
A.I.A.
V.I.-A.

SHEET NO.: S-3
SHEET NO. # OF # SHEETS