ATTACHMENT NO. 1/ INVITATION FOR BIDS: IFB002OOGT16(C)

ADDENDUM NO. 1

February 23, 2016
GOVERNMENT OF THE UNITED STATES VIRGIN ISLANDS
through the
DEPARTMENT OF PROPERTY AND PROCUREMENT
for the
OFFICE OF THE GOVERNOR

Phase II: Office Space Renovation
Government House, 19A – 20 Kongens Gade
St. Thomas, U. S. Virgin Islands

---

1. **REVISED DESIGN DRAWINGS –**
   - *Sheets C1.0 and C2.0*
   - *Sheet 2A1.1A and 2A1.1B*
   - *Sheet 3A1.0*
   - *Sheet 3A1.1*
   - *Sheet A4.0A*
   - *Sheet A5.0*

JDG Jaredian Design Group
Architects, Engineers and Construction Managers

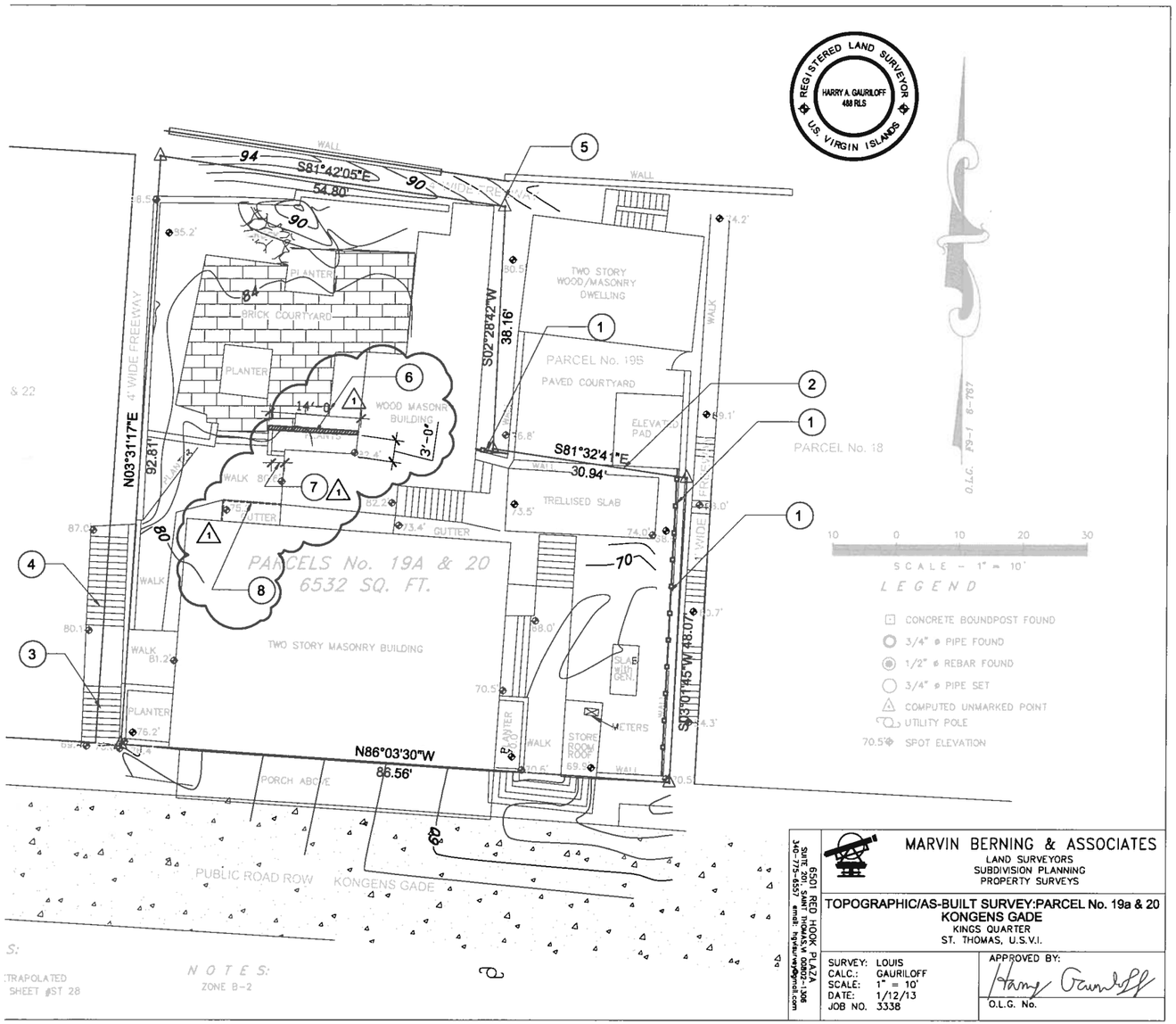

MARVIN BERNING & ASSOCIATES
LAND SURVEYORS
SUBDIVISION PLANNING
PROPERTY SURVEYS

6501 RED HOOK PLAZA
SUITE 201, ST. THOMAS, USVI 00802-1308
340-775-6537, email: hgsurvey@gmail.com

TOPOGRAPHIC/AS-BUILT SURVEY:PARCEL No. 19a & 20
KONGENS GADE
KINGS QUARTER
ST. THOMAS, U.S.V.I.

SURVEY: LOUIS
CALC.: GAURILOFF
SCALE: 1" = 10'
DATE: 1/12/13
JOB NO. 3338

APPROVED BY: Harry Gauriloff
O.L.G. No.

1	ASBUILT SURVEY
C1.0 C1.0	SCALE: 3/32"=1'-0"

CONSTRUCTION TASK NOTES

1. LOCATION OF NEW SECURITY FENCING. SEE DETAILS ON SHEET NO. C2.0
2. NEW TRELLIS PRIVACY WALL
3. LOCATION OF EXISTING BRICK STEPS TO BE REMOVED, RE-POINTED AND RESET. PROVIDE ALLOWANCE FOR APPROXIMATELY 100 SQUARE FEET OF REPLACEMENT.
4. LOCATION OF EXISTING BRICK STEPS TO BE RE-ALIGNED
5. REMOVE AND DISCARD EXISTING PLYWOOD BARRICADE AND INSTALL NEW FENCING.
6. REMOVE AND DISCARD PORTION OF GRADE ALONG THE EXISTING WALL TO INSTALL NEW 8" WIDE RETAINING WALL.SEE DETAIL 6 ON SHEET C2.0
7. SAW CUT AND REMOVE AND DISCARD PORTION OF EXISTING RETAINING WALL
8. INSTALL 12 LINEAR FEET OF 1"X1" WITH 2"X2" HOLLOW ALUMINUM POST AND TOP RAIL ON TOP OF EXISTING RETAINING WALL. RAIL HEIGHT SHALL BE 42" AND BALUSTERS SPACED AT 4" O.C .

REVISIONS

NO:	DATE:	REMARKS
1	8-14-14	REVISION NO.1
2	2/23/16	ADDENDUM NO.1

CONSULTANTS

Jaredian Design Group
Architects, Engineers, Construction Managers
No.33 Dronningens Gade - Queen's Quarter
Post Office Box 6218
St. Thomas, U.S. Virgin Islands 00804
telephone: 340.777.1600 fax: 340.777.1601
e-mail: jaredian2@vipowernet.net

THESE PLANS AND THE DESIGNS CONTAINED HEREIN ARE THE SOLE PROPERTY OF JAREDIAN DESIGN GROUP. THESE PLANS MAY NOT BE REPRODUCED WITHOUT THE WRITTEN PERMISSION OF JAREDIAN DESIGN GROUP. UNAUTHORIZED USE SHALL WAIVE A CLAIM FOR COMPENSATION. THE USE BY ANY PERSON OR FIRM OF THESE PLANS OR ANY PART THEREOF SHALL NOT IN ANY WAY SUBJECT JAREDIAN DESIGN GROUP TO ANY COST OR DAMAGES FOR ANY ERROR OR OMISSION CONTAINED THEREIN.

PHASE II RENOVATION TO
PARCEL NO 19A & 20
KONGENS GADE
KINGS QUARTER
ST. THOMAS,
U.S.V.I. 00802-5858

DATE: 12-2-15
DRAWN BY:
CHECKED BY: J.P.W.
APPROVED BY: J.P.W.

PROJECT NO: 13-002
CONTRACT NO:

SHEET NO: C1.0
ASBUILT SURVEY

REGISTERED ARCHITECT
U.S. VIRGIN ISLANDS

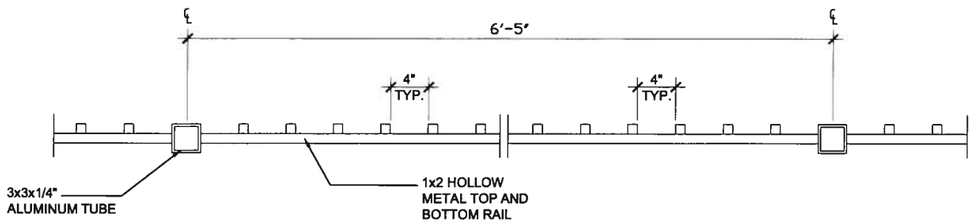

1 SECURITY FENCE ASSEMBLY PLAN

C2.0 | C2.0 SCALE: 1-1/2"=1'-0"

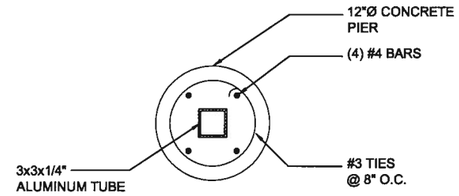

2 CONCRETE PIER PLAN

C2.0 | C2.0 SCALE: 1-1/2"=1'-0"

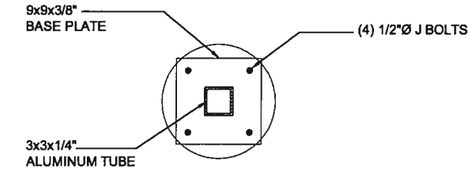

3 CONCRETE PIER PLAN

C2.0 | C2.0 SCALE: 1-1/2"=1'-0"

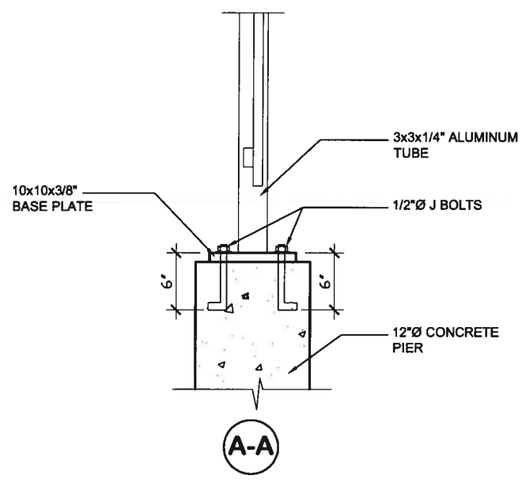

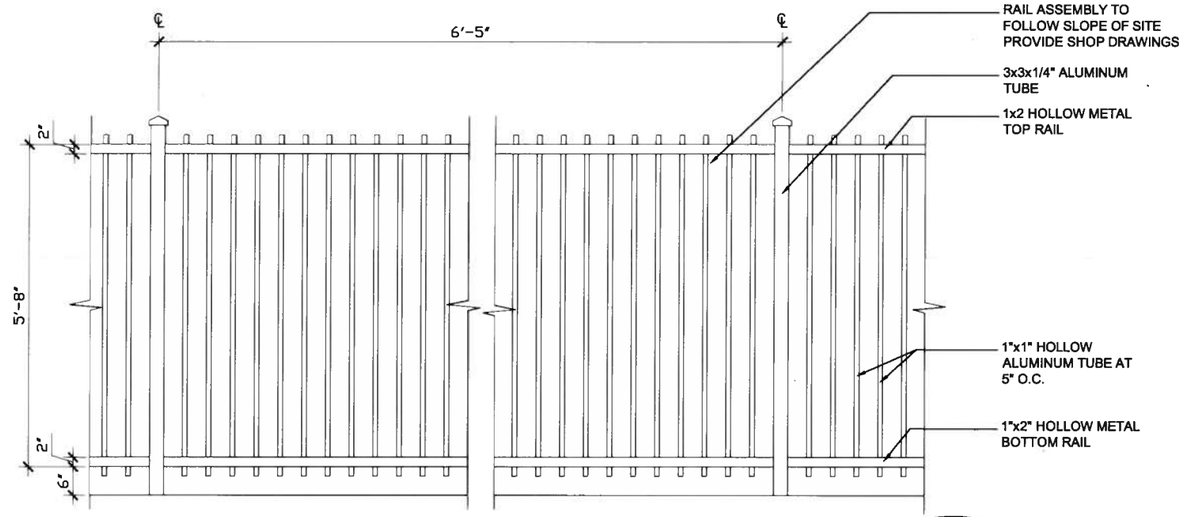

5 SECURITY FENCE ASSEMBLY

C2.0 | C2.0 SCALE: 3/4"=1'-0"

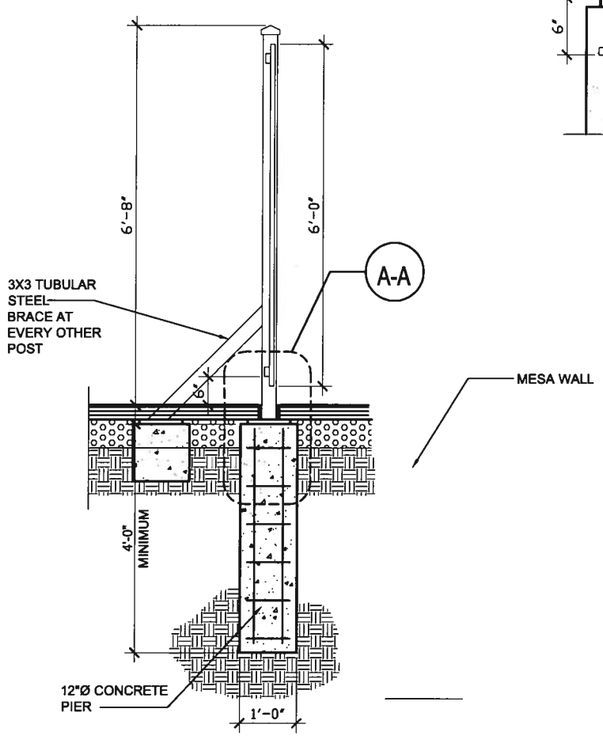

4 DETAIL

C2.0 | C2.0 SCALE: 3/4"=1'-0"

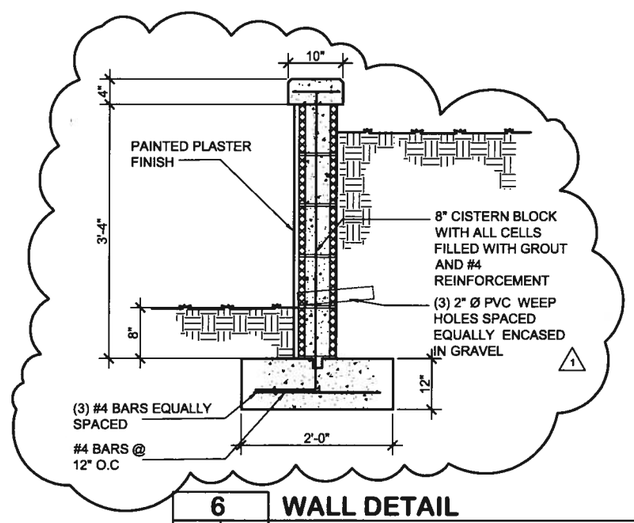

6 WALL DETAIL

C2.0 | C2.0 SCALE: 1"=1'-0"

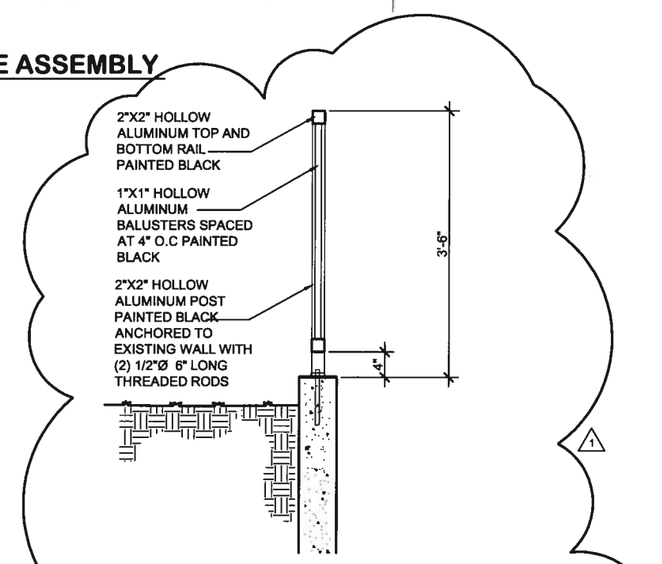

7 GUARD RAIL DETAIL

C2.0 | C2.0 SCALE: 1"=1'-0"

REVISIONS		
NO:	DATE:	REMARKS
1	2/23/16	ADDENDUM NO.1

CONSULTANTS

Jaredian Design Group
Architects, Engineers, Construction Managers
No.33 Dronningens Gade - Queen's Quarter
Post Office Box 6218
St. Thomas, U.S. Virgin Islands 00804
telephone: 340.777.1600 fax: 340.777.1601
e-mail: jaredian2@vipowernet.net

THESE PLANS AND THE DESIGNS CONTAINED HEREIN ARE THE SOLE PROPERTY OF JAREDIAN DESIGN GROUP. THESE PLANS MAY NOT BE REPRODUCED WITHOUT THE WRITTEN PERMISSION OF JAREDIAN DESIGN GROUP. UNAUTHORIZED USE SHALL INVITE A CLAIM FOR COMPENSATION. THE USE BY ANY PERSON OR FIRM OF THESE PLANS OR ANY PART THEREOF SHALL NOT IN ANY WAY SUBJECT JAREDIAN DESIGN GROUP TO ANY COST OR DAMAGES FOR ANY ERROR OR OMISSION CONTAINED THEREIN.

PHASE II RENOVATION TO
PARCEL NO 19A & 20
KONGENS GADE
KINGS QUARTER
ST. THOMAS,
U.S.V.I. 00802-5858

DATE: 12-2-15
DRAWN BY: R.O.P
CHECKED BY: J.P.W.
APPROVED BY: J.P.W.

PROJECT NO: 13-002
CONTRACT NO:

SHEET NO: C2.0
DETAILS

REGISTERED ARCHITECT U.S. VIRGIN ISLANDS

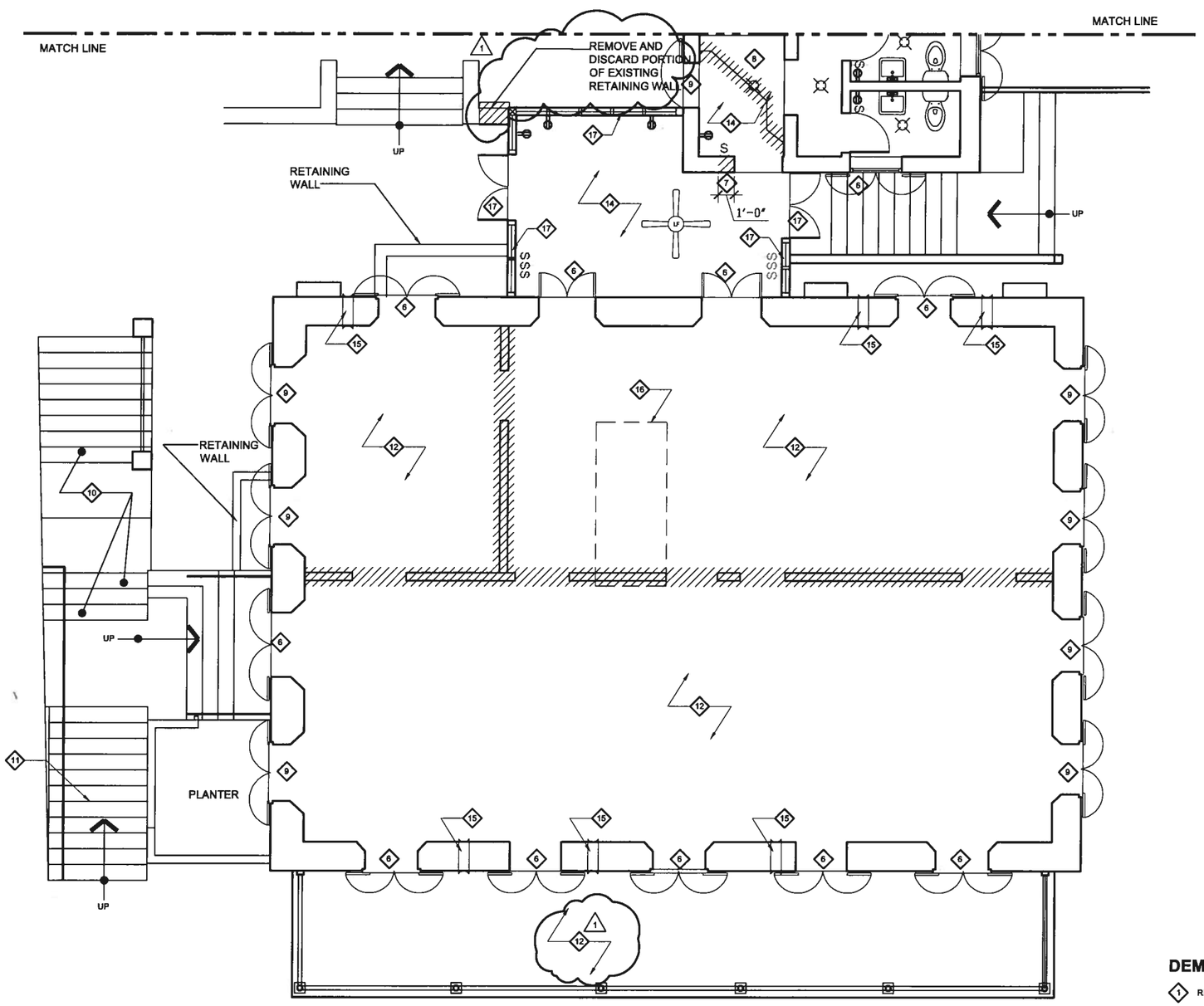

N

PLAN

1	
2A1.1A	2A1.1A

SECOND FLOOR DEMOLITION FLOOR PLAN

SCALE: 1/4"=1'-0"

DEMOLITION SYMBOL LEGEND

EXISTING WALL TO BE DEMOLISHED

EXISTING WALL TO REMAIN

GENERAL DEMOLITION NOTES

1. CONTRACTOR SHALL FIELD VERIFY ALL EXISTING CONDITIONS AND BE FAMILIAR WITH ALL SYSTEMS BEFORE DEMOLITION. ALL DEMOLITION SHALL COMPLY WITH THE RULES & REGULATIONS OF THE FEDERAL, STATE, COUNTRY AND CITY GOVERNMENTS. EXISTING SERVICES SHALL BE MAINTAINED DURING DEMOLITION. ANY SHUTDOWN OF SYSTEMS MUST BE COORDINATED & APPROVED BY THE OWNER. CONTRACTOR SHOULD COORDINATE WORK WITH ALL TRADES & PROVIDE SUPERVISION WHILE WORK IS BEING PERFORMED.
2. THE CONTRACTOR SHALL VERIFY WITH THE OWNER, ALL MATERIALS TO BE RETAINED BY THE OWNER & DELIVER & STORE SAME WHERE DIRECTED BY THE OWNER. ALL REMAINING ITEMS BECOME THE PROPERTY OF THE CONTRACTOR & SHALL BE DISPOSED OF IN A LEGAL MANNER.
3. DO NOT INTERFERE WITH USE OF ADJACENT AREAS. MAINTAIN FREE & SAFE PASSAGE TO & FROM ADJACENT AREAS. PROVIDE, ERECT & MAINTAIN BARRICADES & LIGHTING AS REQUIRED BY APPLICABLE REGULATORY ADVISORY TO PROTECT OCCUPANTS OF THE BUILDING & WORKERS.
4. REMOVE EXISTING ELEMENTS AS INDICATED BY LEGEND. SURFACES OF EXISTING AREAS WHICH HAVE BEEN ALTERED BY DEMOLITION NOT SPECIFICALLY CALLED FOR SHALL BE REPAIRED & FINISHED TO MATCH THE ADJACENT SURFACES. PROTECT ALL EXISTING OR REMAINING SURFACES, FLOORS, WALLS & CEILINGS FROM AREAS OF DEMOLITION & NEW CONSTRUCTION.
5. CONTRACTOR SHALL FIELD VERIFY THE EXISTING CONDITIONS & NOTIFY THE ARCHITECT OF DISSIMILARITIES BEFORE PROCEEDING WITH DEMOLITION WORK. ALL WORK SHALL BE COORDINATED WITH DRAWINGS FOR NEW CONSTRUCTION.
6. CONTRACTOR SHALL FIELD VERIFY ALL DIMENSIONS PRIOR TO DEMOLITION OR CONSTRUCTION IN EXISTING AREAS
7. ERECT & MAINTAIN DUSTPROOF PARTITIONS AS REQUIRED TO PREVENT THE SPREAD OF DUST, FUMES & SMOKE TO OTHER PARTS OF THE BUILDING. MAINTAIN EXIT REQUIREMENTS, COORDINATE EXACT LOCATION WITH OWNER. ON COMPLETION OF WORK, REMOVE TEMPORARY PARTITIONS & REPAIR DAMAGED SURFACES TO MATCH ADJACENT SURFACES.
8. ARRANGE & PAY FOR DISCONNECTING, REMOVING & CAPPING UTILITY SERVICES WITHIN AREAS OF DEMOLITION. DISCONNECT & STUB-OFF, NOTIFY THE AFFECTED UTILITY COMPANY & OBTAIN APPROVAL BEFORE STARTING THIS WORK.
9. REMOVE FROM THE SITE ALL CONTAMINATED, VERMIN INFESTED OR DANGEROUS MATERIALS ENCOUNTERED & DISPOSE OF BY LEGAL MEANS. DO NOT ENDANGER THE HEALTH OF WORKERS OF THE PUBLIC.
10. THE OWNER RESERVES THE RIGHT TO SALVAGE ANY MATERIAL OR PORTION THEREOF FROM DEMOLISHED MATERIAL BEFORE IT IS DISPOSED OF.
11. ALL PLUMBING (POTABLE, SANITARY, ETC.) REQUIRED FOR OTHER FLOORS ABOVE OR BELOW SHALL NOT BE DISRUPTED OR REMOVED. CONTRACTOR SHALL BE RESPONSIBLE TO VERIFY ALL SERVICES PRIOR TO REMOVAL OR DISCONNECTION OF ALL SERVICES (ELECTRICAL, HVAC, PLUMBING, SECURITY & TEL./DATA) FOR ADJOINING OCCUPIED SPACES SHALL BE MAINTAINED. CONTRACTOR TO MAKE MINOR ADJUSTMENTS AS REQUIRED TO MAINTAIN PLUMBING, ELECTRICAL & TEL/DATA TO OCCUPIED AREAS.
12. THE CONTRACTOR SHALL REMOVE & DISCARD ALL PLUMBING FIXTURES. THEY SHALL CAP ALL PIPES TEMPORALLY FOR RE-USE.
13. WHERE EXISTING WALLS ARE INDICATED TO BE REMOVED, PATCH INTERSECTING WALLS TO REMAIN FLUSH TO ACCEPT NEW FINISH.
14. CONTRACTOR SHALL REMOVE & DISCARD ALL DOORS, FRAMES, HARDWARE, ETC. UNLESS SPECIFICALLY NOTED OTHERWISE.
15. CONTRACTOR SHALL USE SELF LEVELING COMPOUND IN AREAS WHERE WALLS OR FLOOR TILES HAVE BEEN REMOVED OR ALTERED IN ORDER TO MAINTAIN A LEVEL SURFACE THROUGHOUT. THEY MUST ALSO USE IT IN AREAS WHERE A TRANSITION IS NEEDED BETWEEN SURFACES THAT ARE DIFFERENT IN MATERIAL OR HEIGHT.
16. EXISTING WOOD SHUTTER TO BE REMOVED AND REFURNISHED.
17. CONTRACTOR SHALL STRIP AND SAND EXISTING WOOD FLOORING FOR PREPARATION OF NEW FINISH . CONTRACTOR SHALL ALLOW FOR 200 SQ.FT. OF REPLACEMENT. 1
18. EXISTING REDWOOD LOUVER POST AND DOOR ASSEMBLY TO BE REMOVED AND DISCARDED AND REPLACE WITH NEW IMPACT RESISTANT GLASS DOOR AND WINDOW ASSEMBLY IN EXTRUDED ALUMINUM FRAME.
19. THE CONTRACTOR SHALL SURVEY THE EXISTING EQUIPMENT & FURNISHINGS & DISCARD ALL EQUIPMENT & FURNISHINGS NOT DESIGNATED BY OWNER OR OWNER'S REPRESENTATIVE TO BE SALVAGED.
20. EXISTING BASEBOARD TO BE REMOVED AND DISCARDED.
21. EXISTING WOOD DECKING ON PORCH TO BE SANDED AND REPAINTED.
22. CONTRACTOR SHALL REMOVE ALL LOOSE PORTIONS OF EXISTING MASS MASONRY WALL. INSTALL A SCRATCH COAT OF LIME PLASTER PRIOR TO INSTALLATION OF THE FURRED WALL SYSTEM.
23. CONTRACTOR SHALL REMOVE AND DISCARD ALL OBSOLETE AND NONFUNCTIONAL CONDUITS,WIRE AND EQUIPMENT OF THE BUILDING.
24. REMOVE AND DISCARD EXISTING METAL ROOFING SYSTEM COMPLETE.

DEMOLITION NOTES LEGEND

1. REMOVE AND DISCARD EXISTING DOOR TRIM AND CASING.
2. REMOVE AND DISCARD EXISTING LIGHT FIXTURES AND CEILING FANS.
3. REMOVE AND DISCARD EXISTING WINDOW.
4. REMOVE AND DISCARD EXISTING TILES ON FLOOR AND WALLS.
5. REMOVE AND DISCARD EXISTING BATHROOM FIXTURES.
6. EXISTING WOOD SHUTTER TO BE REFURBISHED.
7. REMOVE PORTION OF EXISTING MASS MASONRY WALL AND FRAME, FINISH WITH BRICK AND STONE. PROVIDE NEW 3X12 HEADER AND FRAME TO MATCH EXISTING.CONTRACTOR SHALL RE-POINT FINISH EDGE WITH BRICK AND STONE TO INSURE A TRANSITION BETWEEN NEW AND EXISTING.
8. REMOVE PORTION OF EXISTING STAIRS AS REQUIRED TO ACCOMMODATE NEW STAIR CONFIGURATION.
9. REPLACE EXISTING SHUTTER.
10. LOCATION OF PORTION OF EXISTING BRICK STAIRS TO BE REMOVED AND RE-ALLIGNED. (SEE PLANS)
11. LOCATION OF EXISTING BRICK STEPS TO BE REMOVED, RE-POINTED AND RESET. PROVIDE ALLOWANCE FOR APPROXIMATELY 100 SQUARE FEET OF REPLACEMENT.
12. CONTRACTOR SHALL STRIP AND SAND EXISTING WOOD FLOOR IN PREPARATION OF NEW FINISH.ALLOW FOR APPROXIMATELY 200 SQUARE FEET OF REPLACEMENT.
13. PROTECT EXISTING QUARRY TILE FLOORING FROM DAMAGE.
14. REMOVE EXISTING QUARRY TILE FLOORING.
15. LOCATION OF EXISTING HOLE IN WALL LEFT BY AC DRAIN TO BE PATCH, REPAIRED AND IN-FILLED.
16. EXISTING SOLID WOOD PANEL TO BE REMOVED AND REPLACE WITH HARD WOOD FLOORING TO MATCH.
17. REMOVED AND DISCARD EXISTING REDWOOD LOUVER AND DOOR ASSEMBLY.

REVISIONS		
NO:	DATE:	REMARKS
1	2/23/16	ADDENDUM NO.1

CONSULTANTS

Jaredian Design Group
Architects, Engineers, Construction Managers
No.33 Dronningens Gade - Queen's Quarter
Post Office Box 6218
St. Thomas, U.S. Virgin Islands 00804
telephone: 340.777.1600 fax: 340.777.1601
e-mail: jaredian2@vipowernet.net

THESE PLANS AND THE DESIGNS CONTAINED HEREIN ARE THE SOLE PROPERTY OF JAREDIAN DESIGN GROUP. THESE PLANS MAY NOT BE REPRODUCED WITHOUT THE WRITTEN PERMISSION OF JAREDIAN DESIGN GROUP. UNAUTHORIZED USE SHALL WAIVE A CLAIM FOR COMPENSATION. THE USE BY ANY PERSON OR FIRM OF THESE PLANS OR ANY PART THEREOF SHALL NOT IN ANY WAY SUBJECT JAREDIAN DESIGN GROUP TO ANY COST OR DAMAGES FOR ANY ERROR OR OMISSION CONTAINED THEREIN.

PHASE II RENOVATION TO
PARCEL NO 19A & 20
KONGENS GADE
KINGS QUARTER
ST. THOMAS,
U.S.V.I. 00802-5858

DATE:	12-2-15
DRAWN BY:	R.O.P
CHECKED BY:	J.P.W.
APPROVED BY:	J.P.W.

PROJECT NO: 13-002

CONTRACT NO:

SHEET NO:

2A1.1A

SECOND FLOOR DEMOLITION PLAN

REGISTERED ARCHITECT U.S. VIRGIN ISLANDS

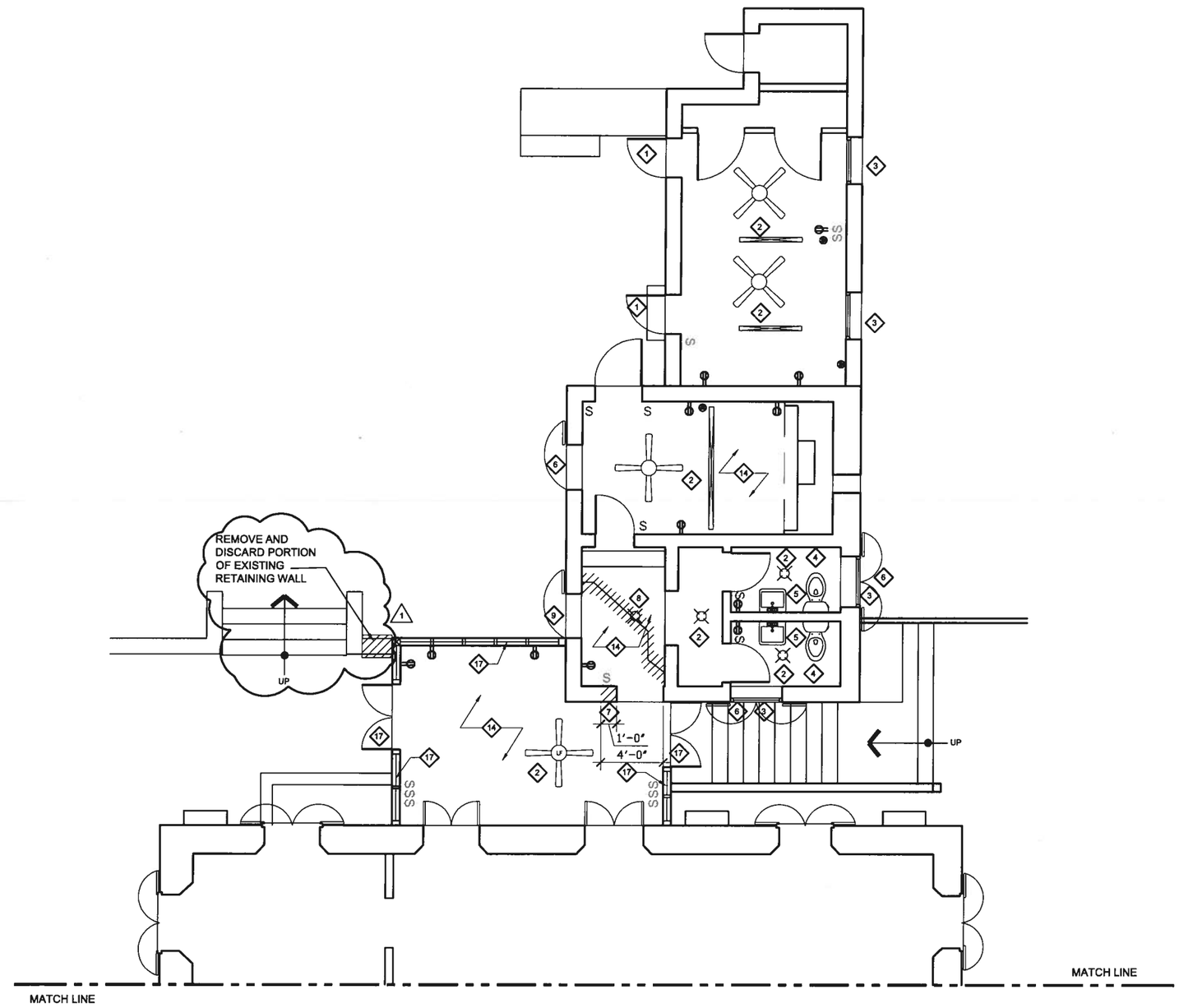

PLAN

1	
2A1.1B	2A1.1B

SECOND FLOOR DEMOLITION FLOOR PLAN

SCALE: 1/4"=1'-0"

DEMOLITION SYMBOL LEGEND

EXISTING WALL TO BE DEMOLISHED

EXISTING WALL TO REMAIN

GENERAL DEMOLITION NOTES

1. CONTRACTOR SHALL FIELD VERIFY ALL EXISTING CONDITIONS AND BE FAMILIAR WITH ALL SYSTEMS BEFORE DEMOLITION. ALL DEMOLITION SHALL COMPLY WITH THE RULES & REGULATIONS OF THE FEDERAL, STATE, COUNTRY AND CITY GOVERNMENTS. EXISTING SERVICES SHALL BE MAINTAINED DURING DEMOLITION. ANY SHUTDOWN OF SYSTEMS MUST BE COORDINATED & APPROVED BY THE OWNER. CONTRACTOR SHOULD COORDINATE WORK WITH ALL TRADES & PROVIDE SUPERVISION WHILE WORK IS BEING PERFORMED.
2. THE CONTRACTOR SHALL VERIFY WITH THE OWNER, ALL MATERIALS TO BE RETAINED BY THE OWNER & DELIVER & STORE SAME WHERE DIRECTED BY THE OWNER. ALL REMAINING ITEMS BECOME THE PROPERTY OF THE CONTRACTOR & SHALL BE DISPOSED OF IN A LEGAL MANNER.
3. DO NOT INTERFERE WITH USE OF ADJACENT AREAS. MAINTAIN FREE & SAFE PASSAGE TO & FROM ADJACENT AREAS. PROVIDE, ERECT & MAINTAIN BARRICADES & LIGHTING AS REQUIRED BY APPLICABLE REGULATORY ADVISORY TO PROTECT OCCUPANTS OF THE BUILDING & WORKERS.
4. REMOVE EXISTING ELEMENTS AS INDICATED BY LEGEND. SURFACES OF EXISTING AREAS WHICH HAVE BEEN ALTERED BY DEMOLITION NOT SPECIFICALLY CALLED FOR SHALL BE REPAIRED & FINISHED TO MATCH THE ADJACENT SURFACES. PROTECT ALL EXISTING OR REMAINING SURFACES, FLOORS, WALLS & CEILINGS FROM AREAS OF DEMOLITION & NEW CONSTRUCTION.
5. CONTRACTOR SHALL FIELD VERIFY THE EXISTING CONDITIONS & NOTIFY THE ARCHITECT OF DISSIMILARITIES BEFORE PROCEEDING WITH DEMOLITION WORK. ALL WORK SHALL BE COORDINATED WITH DRAWINGS FOR NEW CONSTRUCTION.
6. CONTRACTOR SHALL FIELD VERIFY ALL DIMENSIONS PRIOR TO DEMOLITION OR CONSTRUCTION IN EXISTING AREAS
7. ERECT & MAINTAIN DUSTPROOF PARTITIONS AS REQUIRED TO PREVENT THE SPREAD OF DUST, FUMES & SMOKE TO OTHER PARTS OF THE BUILDING. MAINTAIN EXIT REQUIREMENTS, COORDINATE EXACT LOCATION WITH OWNER. ON COMPLETION OF WORK, REMOVE TEMPORARY PARTITIONS & REPAIR DAMAGED SURFACES TO MATCH ADJACENT SURFACES.
8. ARRANGE & PAY FOR DISCONNECTING, REMOVING & CAPPING UTILITY SERVICES WITHIN AREAS OF DEMOLITION. DISCONNECT & STUB-OFF, NOTIFY THE AFFECTED UTILITY COMPANY & OBTAIN APPROVAL BEFORE STARTING THIS WORK.
9. REMOVE FROM THE SITE ALL CONTAMINATED, VERMIN INFESTED OR DANGEROUS MATERIALS ENCOUNTERED & DISPOSE OF BY LEGAL MEANS. DO NOT ENDANGER THE HEALTH OF WORKERS OF THE PUBLIC.
10. THE OWNER RESERVES THE RIGHT TO SALVAGE ANY MATERIAL OR PORTION THEREOF FROM DEMOLISHED MATERIAL BEFORE IT IS DISPOSED OF.
11. ALL PLUMBING (POTABLE, SANITARY, ETC.) REQUIRED FOR OTHER FLOORS ABOVE OR BELOW SHALL NOT BE DISRUPTED OR REMOVED. CONTRACTOR SHALL BE RESPONSIBLE TO VERIFY ALL SERVICES PRIOR TO REMOVAL OR DISCONNECTION OF ALL SERVICES (ELECTRICAL, HVAC, PLUMBING, SECURITY & TEL./DATA) FOR ADJOINING OCCUPIED SPACES SHALL BE MAINTAINED. CONTRACTOR TO MAKE MINOR ADJUSTMENTS AS REQUIRED TO MAINTAIN PLUMBING, ELECTRICAL & TEL/DATA TO OCCUPIED AREAS.
12. THE CONTRACTOR SHALL REMOVE & DISCARD ALL PLUMBING FIXTURES. THEY SHALL CAP ALL PIPES TEMPORALLY FOR RE-USE.
13. WHERE EXISTING WALLS ARE INDICATED TO BE REMOVED, PATCH INTERSECTING WALLS TO REMAIN FLUSH TO ACCEPT NEW FINISH.
14. CONTRACTOR SHALL REMOVE & DISCARD ALL DOORS, FRAMES, HARDWARE, ETC. UNLESS SPECIFICALLY NOTED OTHERWISE.
15. CONTRACTOR SHALL USE SELF LEVELING COMPOUND IN AREAS WHERE WALLS OR FLOOR TILES HAVE BEEN REMOVED OR ALTERED IN ORDER TO MAINTAIN A LEVEL SURFACE THROUGHOUT. THEY MUST ALSO USE IT IN AREAS WHERE A TRANSITION IS NEEDED BETWEEN SURFACES THAT ARE DIFFERENT IN MATERIAL OR HEIGHT.
16. EXISTING WOOD SHUTTER TO BE REMOVED AND REFURNISHED.
17. CONTRACTOR SHALL STRIP AND SAND EXISTING WOOD FLOORING FOR PREPARATION OF NEW FINISH . CONTRACTOR SHALL ALLOW FOR 200 SQ.FT. OF REPLACEMENT. 1
18. EXISTING REDWOOD LOUVER POST AND DOOR ASSEMBLY TO BE REMOVED AND DISCARDED AND REPLACE WITH NEW IMPACT RESISTANT GLASS DOOR AND WINDOW ASSEMBLY IN EXTRUDED ALUMINUM FRAME.
19. THE CONTRACTOR SHALL SURVEY THE EXISTING EQUIPMENT & FURNISHINGS & DISCARD ALL EQUIPMENT & FURNISHINGS NOT DESIGNATED BY OWNER OR OWNER'S REPRESENTATIVE TO BE SALVAGED.
20. EXISTING BASEBOARD TO BE REMOVED AND DISCARDED.
21. EXISTING WOOD DECKING ON PORCH TO BE SANDED AND REPAINTED.
22. CONTRACTOR SHALL REMOVE ALL LOOSE PORTIONS OF EXISTING MASS MASONRY WALL. INSTALL A SCRATCH COAT OF LIME PLASTER PRIOR TO INSTALLATION OF THE FURRED WALL SYSTEM.
23. CONTRACTOR SHALL REMOVE AND DISCARD ALL OBSOLETE AND NONFUNCTIONAL CONDUITS,WIRE AND EQUIPMENT OF THE BUILDING.
24. REMOVE AND DISCARD EXISTING METAL ROOFING SYSTEM COMPLETE.

DEMOLITION NOTES LEGEND

1. REMOVE AND DISCARD EXISTING DOOR TRIM AND CASING.
2. REMOVE AND DISCARD EXISTING LIGHT FIXTURES AND CEILING FANS.
3. REMOVE AND DISCARD EXISTING WINDOW.
4. REMOVE AND DISCARD EXISTING TILES ON FLOOR AND WALLS.
5. REMOVE AND DISCARD EXISTING BATHROOM FIXTURES.
6. EXISTING WOOD SHUTTER TO BE REFURBISHED.
7. REMOVE PORTION OF EXISTING MASS MASONRY WALL AND FRAME, FINISH WITH BRICK AND STONE. PROVIDE NEW 3X12 HEADER AND FRAME TO MATCH EXISTING.CONTRACTOR SHALL RE-POINT FINISH EDGE WITH BRICK AND STONE TO INSURE A TRANSITION BETWEEN NEW AND EXISTING.
8. REMOVE PORTION OF EXISTING STAIRS AS REQUIRED TO ACCOMMODATE NEW STAIR CONFIGURATION.
9. REPLACE EXISTING SHUTTER.
10. LOCATION OF PORTION OF EXISTING BRICK STAIRS TO BE REMOVED AND RE-ALLIGNED. (SEE PLANS)
11. LOCATION OF EXISTING BRICK STEPS TO BE REMOVED, RE-POINTED AND RESET. PROVIDE ALLOWANCE FOR APPROXIMATELY 100 SQUARE FEET OF REPLACEMENT.
12. CONTRACTOR SHALL STRIP AND SAND EXISTING WOOD FLOOR IN PREPARATION OF NEW FINISH.ALLOW FOR APPROXIMATELY 200 SQUARE FEET OF REPLACEMENT.
13. PROTECT EXISTING QUARRY TILE FLOORING FROM DAMAGE.
14. REMOVE EXISTING QUARRY TILE FLOORING.
15. LOCATION OF EXISTING HOLE IN WALL LEFT BY AC DRAIN TO BE PATCH, REPAIRED AND IN-FILLED.
16. EXISTING SOLID WOOD PANEL TO BE REMOVED AND REPLACE WITH HARD WOOD FLOORING TO MATCH.
17. REMOVED AND DISCARD EXISTING REDWOOD LOUVER AND DOOR ASSEMBLY.

REVISIONS		
NO:	DATE:	REMARKS
1	2/23/16	ADDENDUM NO.1

CONSULTANTS

Jaredian Design Group
Architects, Engineers, Construction Managers
No.33 Dronningens Gade - Queen's Quarter
Post Office Box 6218
St. Thomas, U.S. Virgin Islands 00804
telephone: 340.777.1600 fax: 340.777.1601
e-mail: jaredian2@vipowernet.net

THESE PLANS AND THE DESIGNS CONTAINED HEREIN ARE THE SOLE PROPERTY OF JAREDIAN DESIGN GROUP. THESE PLANS MAY NOT BE REPRODUCED WITHOUT THE WRITTEN PERMISSION OF JAREDIAN DESIGN GROUP. UNAUTHORIZED USE SHALL INVITE A CLAIM FOR COMPENSATION. THE USE BY ANY PERSON OR FIRM OF THESE PLANS OR ANY PART THEREOF SHALL NOT IN ANY WAY SUBJECT JAREDIAN DESIGN GROUP TO ANY COST OR DAMAGES FOR ANY ERROR OR OMISSION CONTAINED THEREIN.

PHASE II RENOVATION TO
PARCEL NO 19A & 20
KONGENS GADE
KINGS QUARTER
ST. THOMAS,
U.S.V.I. 00802-5858

DATE: 12-2-15
DRAWN BY: R.O.P
CHECKED BY: J.P.W.
APPROVED BY: J.P.W.

PROJECT NO: 13-002
CONTRACT NO:

SHEET NO:
2A1.1B
SECOND FLOOR DEMOLITION PLAN

REGISTERED ARCHITECT U.S. VIRGIN ISLANDS

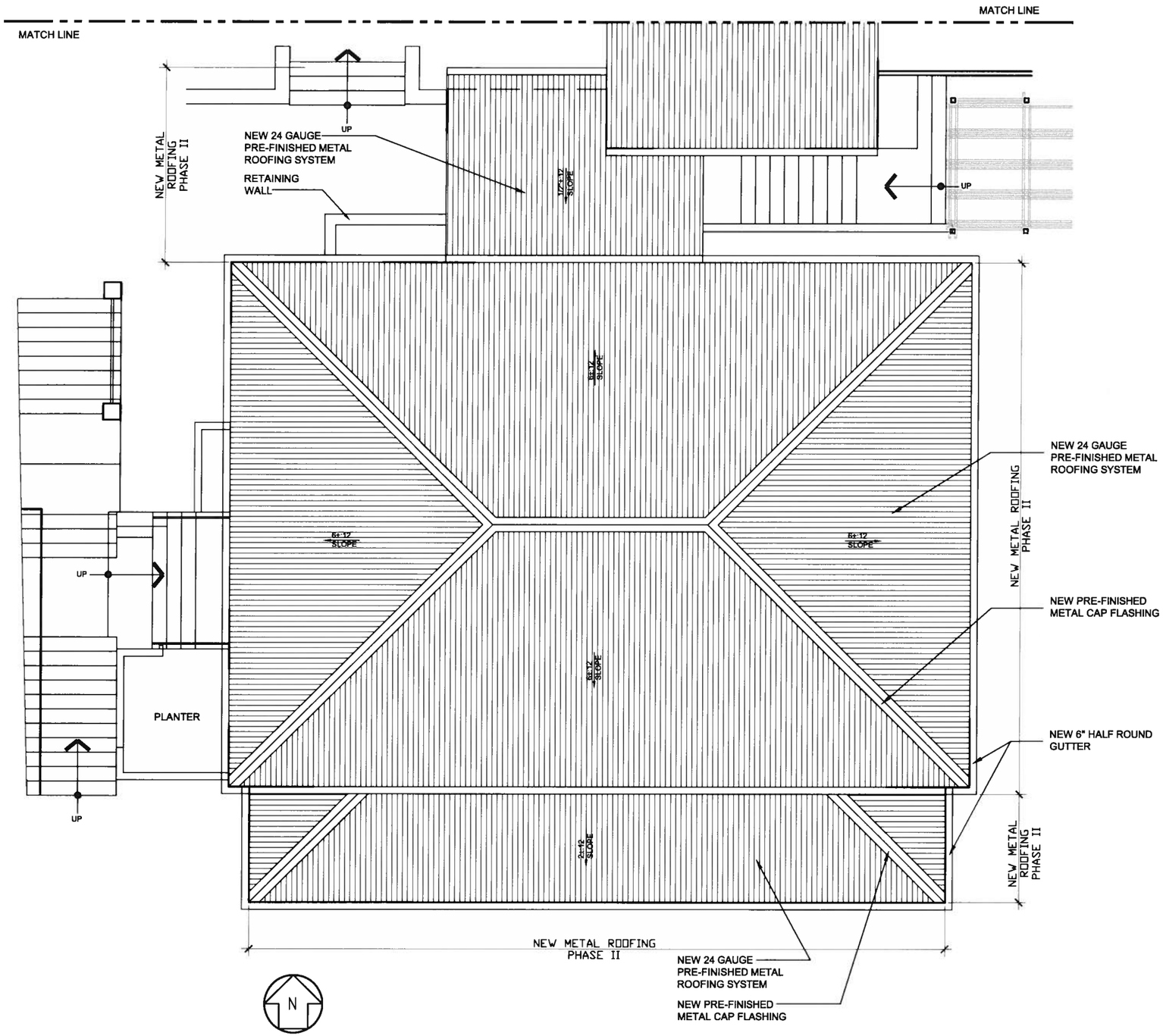

PLAN

1	ARCHITECTURAL ROOF PLAN
3A1.0 3A1.0	SCALE: 1/4"=1'-0"

ROOF NOTE

1. CONTRACTOR SHALL REMOVE AND DISCARD EXISTING C-PANEL METAL ROOFING SYSTEM COMPLETE WITH CAP FLASHING, PURLINS ETC.
2. CONTRACTOR SHALL INSTALL NEW 24 GAUGE C-PANEL ROOFING SYSTEM OVER NEW PRESSURE TREATED 2X4 PURLINS SPACED @ 24" O.C.
3. CONTRACTOR SHALL INSTALL 2X6 PURLINS @ ALL HIPS, RIDGES AND EAVES.
4. CONTRACTOR SHALL INSTALL 30LB FELT PAPER OVER DECKING.
5. CONTRACTOR SHALL INSTALL NEW 1½" RIGID INSULATION OVER EXISTING DECKING.
6. ALL LUMBER USED SHALL BE PRESSURE TREATED.
7. FB OF RAFTERS SHALL BE 1300 PSI MINIMUM.
8. ALL PURLINS TO RAFTERS SHALL HAVE #10 SCREWS 4' LONG.
9. ALL SIMPSON CONNECTORS SHALL HAVE MANUFACTURER'S APPROVED FASTENERS.
10. ALL ROOFING CONNECTORS SHALL BE 16 GAUGE MINIMUM AND HOT DIPPED GALVANIZED.
11. PROVIDE GALVANIZED DOWN SPOUT SUPPORT BRACKET TO WALL SPACED @ 3'-0" O.C. MAX.
12. PLUMBING VENTS SHALL BE EXTENDED 12" ABOVE THE ROOF AND SHALL BE FLASHED ACCORDING TO THE GALVANIZE METAL ROOF MANUFACTURER'S SPECIFICATION.
13. LAY FELT PARALLEL TO THE EAVES WITH A 2" END LAP NAILED SUFFICIENTLY TO HOLD IN PLACE LAP 2" HORIZONTAL AND 6" VERTICAL MINIMUM.
14. THE CONTRACTOR SHALL NOTIFY THE ARCHITECT OF ANY DISCREPANCIES OR ERRORS AND SHALL FIELD VERIFY ALL DIMENSIONS PRIOR TO THE CONSTRUCTION OF THE ROOF.
15. ALL METAL PANEL LAPS SHALL BE SECURED WITH DOUBLE BEAD LAP TAPE.

REVISIONS

NO:	DATE:	REMARKS
1	2/23/16	ADDENDUM NO.1

CONSULTANTS

Jaredian Design Group
Architects, Engineers, Construction Managers
No.33 Dronningens Gade - Queen's Quarter
Post Office Box 6218
St. Thomas, U.S. Virgin Islands 00804
telephone: 340.777.1600 fax: 340.777.1601
e-mail: jaredian2@vipowernet.net

THESE PLANS AND THE DESIGNS CONTAINED HEREIN ARE THE SOLE PROPERTY OF JAREDIAN DESIGN GROUP. THESE PLANS MAY NOT BE REPRODUCED WITHOUT THE WRITTEN PERMISSION OF JAREDIAN DESIGN GROUP. UNAUTHORIZED USE SHALL INVITE A CLAIM FOR COMPENSATION. THE USE BY ANY PERSON OR FIRM OF THESE PLANS OR ANY PART THEREOF SHALL NOT IN ANY WAY SUBJECT JAREDIAN DESIGN GROUP TO ANY COST OR DAMAGES FOR ANY ERROR OR OMISSION CONTAINED THEREIN.

PHASE II RENOVATION TO
PARCEL NO 19A & 20
KONGENS GADE
KINGS QUARTER
ST. THOMAS,
U.S.V.I. 00802–5858

DATE: 12–2–15
DRAWN BY: R.O.P
CHECKED BY: J.P.W.
APPROVED BY: J.P.W.

PROJECT NO: 13–002
CONTRACT NO:

SHEET NO:
3A1.0
ARCHITECTURAL ROOF PLAN

REGISTERED ARCHITECT U.S. VIRGIN ISLANDS

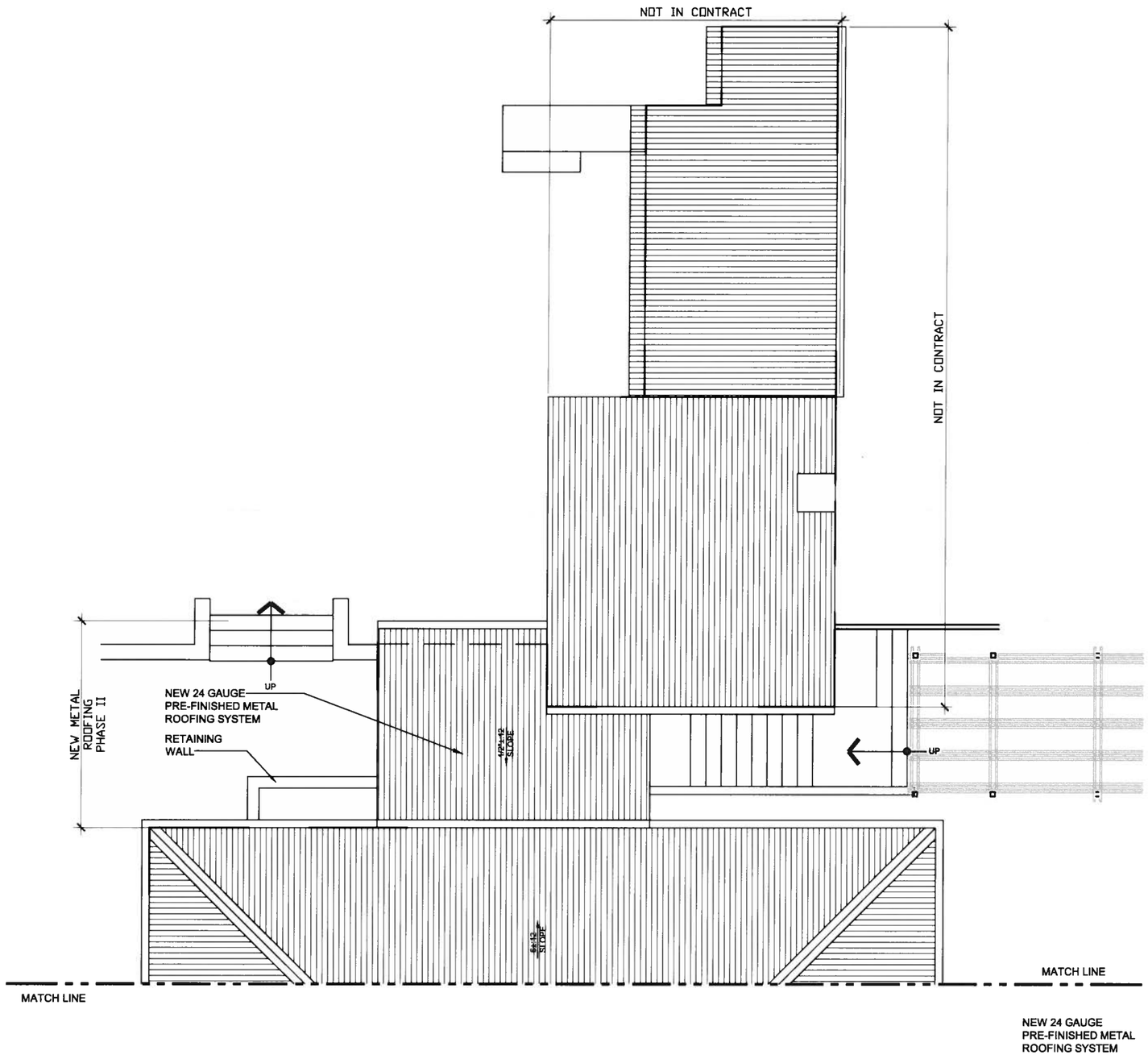

PLAN

1	
3A1.1	3A1.1

ARCHITECTURAL ROOF PLAN

SCALE: 1/4"=1'-0"

ROOF NOTE

1. CONTRACTOR SHALL REMOVE AND DISCARD EXISTING C-PANEL METAL ROOFING SYSTEM COMPLETE WITH CAP FLASHING, PURLINS ETC.
2. CONTRACTOR SHALL INSTALL NEW 24 GAUGE C-PANEL ROOFING SYSTEM OVER NEW PRESSURE TREATED 2X4 PURLINS SPACED @ 24" O.C.
3. CONTRACTOR SHALL INSTALL 2X6 PURLINS @ ALL HIPS, RIDGES AND EAVES.
4. CONTRACTOR SHALL INSTALL 30LB FELT PAPER OVER DECKING.
5. CONTRACTOR SHALL INSTALL NEW 1½" RIGID INSULATION OVER EXISTING DECKING.
6. ALL LUMBER USED SHALL BE PRESSURE TREATED.
7. FB OF RAFTERS SHALL BE 1300 PSI MINIMUM.
8. ALL PURLINS TO RAFTERS SHALL HAVE #10 SCREWS 4' LONG.
9. ALL SIMPSON CONNECTORS SHALL HAVE MANUFACTURER'S APPROVED FASTENERS.
10. ALL ROOFING CONNECTORS SHALL BE 16 GAUGE MINIMUM AND HOT DIPPED GALVANIZED.
11. PROVIDE GALVANIZED DOWN SPOUT SUPPORT BRACKET TO WALL SPACED @ 3'-0" O.C. MAX.
12. PLUMBING VENTS SHALL BE EXTENDED 12" ABOVE THE ROOF AND SHALL BE FLASHED ACCORDING TO THE GALVANIZE METAL ROOF MANUFACTURER'S SPECIFICATION.
13. LAY FELT PARALLEL TO THE EAVES WITH A 2" END LAP NAILED SUFFICIENTLY TO HOLD IN PLACE LAP 2" HORIZONTAL AND 6" VERTICAL MINIMUM.
14. THE CONTRACTOR SHALL NOTIFY THE ARCHITECT OF ANY DISCREPANCIES OR ERRORS AND SHALL FIELD VERIFY ALL DIMENSIONS PRIOR TO THE CONSTRUCTION OF THE ROOF.
15. ALL METAL PANEL LAPS SHALL BE SECURED WITH DOUBLE BEAD LAP TAPE.

REVISIONS

NO:	DATE:	REMARKS
1	2/23/16	SHEET ADDED
		ADDENDUM NO.1

CONSULTANTS

Jaredian Design Group
Architects, Engineers, Construction Managers
No.33 Dronningens Gade - Queen's Quarter
Post Office Box 6218
St. Thomas, U.S. Virgin Islands 00804
telephone: 340.777.1600 fax: 340.777.1601
e-mail: jaredian2@vipowernet.net

THESE PLANS AND THE DESIGNS CONTAINED HEREIN ARE THE SOLE PROPERTY OF JAREDIAN DESIGN GROUP. THESE PLANS MAY NOT BE REPRODUCED WITHOUT THE WRITTEN PERMISSION OF JAREDIAN DESIGN GROUP. UNAUTHORIZED USE SHALL WAIVE A CLAIM FOR COMPENSATION. THE USE BY ANY PERSON OR FIRM OF THESE PLANS OR ANY PART THEREOF SHALL NOT IN ANY WAY SUBJECT JAREDIAN DESIGN GROUP TO ANY COST OR DAMAGES FOR ANY ERROR OR OMISSION CONTAINED THEREIN.

PHASE II RENOVATION TO
PARCEL NO 19A & 20
KONGENS GADE
KINGS QUARTER
ST. THOMAS,
U.S.V.I. 00802-5858

DATE: 12-2-15
DRAWN BY: R.O.P
CHECKED BY: J.P.W.
APPROVED BY: J.P.W.

PROJECT NO: 13-002
CONTRACT NO:

SHEET NO:
3A1.1
ARCHITECTURAL ROOF PLAN

REGISTERED ARCHITECT U.S. VIRGIN ISLANDS

SECOND FLOOR ROOM FINISH SCHEDULE

ROOM NO	NAME	FLOOR MATL	FLOOR FIN	BASE MATL	BASE FIN	WALL NORTH MATL	WALL NORTH FIN	WALL EAST MATL	WALL EAST FIN	WALL SOUTH MATL	WALL SOUTH FIN	WALL WEST MATL	WALL WEST FIN	CEILING MATL	CEILING FIN	CEILING HEIGHT	REMARKS
SECOND FLOOR																	
200	RECEPTION LOBBY	T		B1	PNT												PAINT ALL WALLS
201	TRAINING/ CONFERENCE ROOM	HW	PNT	B2	PNT	GWB	PNT	GWB	PNT	GWB	PNT	GWB	PNT	GWB	PNT		WAINSCOT ALL WALLS
202	OFFICE	HW	PNT	B2	PNT	GWB	PNT	GWB	PNT	GWB	PNT	GWB	PNT	GWB	PNT		WAINSCOT ALL WALLS
203	OFFICE	HW	PNT	B2	PNT	GWB	PNT	GWB	PNT	GWB	PNT	GWB	PNT	GWB	PNT		WAINSCOT ALL WALLS
204	TERRACE	HW	PNT	B2	PNT	E.S	PNT							E.S	PNT		INSTALL BIRD SPIKES
205	OFFICE	HW	PNT	B2	PNT	GWB	PNT	GWB	PNT	GWB	PNT	GWB	PNT	GWB	PNT		WAINSCOT ALL WALLS
206	OFFICE	HW	PNT	B2	PNT	GWB	PNT	GWB	PNT	GWB	PNT	GWB	PNT	GWB	PNT		WAINSCOT ALL WALLS
207	OFFICE	HW	PNT	B2	PNT	GWB	PNT	GWB	PNT	GWB	PNT	GWB	PNT	GWB	PNT		WAINSCOT ALL WALLS
208	COPIER	HW	PNT	B2	PNT	GWB	PNT	GWB	PNT	GWB	PNT	GWB	PNT	GWB	PNT		
209	MECHANICAL	HW	PNT	B2	PNT	GWB	PNT	GWB	PNT	GWB	PNT	GWB	PNT	GWB	PNT		
210	CORRIDOR	HW	PNT	B2	PNT	GWB	PNT	GWB	PNT	GWB	PNT	GWB	PNT	GWB	PNT		WAINSCOT ALL WALLS
211	OFFICE	HW	PNT	B2	PNT	GWB	PNT	GWB	PNT	GWB	PNT	GWB	PNT	GWB	PNT		WAINSCOT ALL WALLS
212	OFFICE	HW	PNT	B2	PNT	GWB	PNT	GWB	PNT	GWB	PNT	GWB	PNT	GWB	PNT		WAINSCOT ALL WALLS
213	FILE STORAGE	HW	PNT	B2	PNT	GWB	PNT	GWB	PNT	GWB	PNT	GWB	PNT				WAINSCOT ALL WALLS
214	RESTROOM	T		B1	PNT	GWB	PNT	GWB	PNT	GWB	PNT	GWB	PNT	E.S	PNT		SEE RESTROOM ELEV.
214.1	VESTIBULE	T		B2	PNT		PNT		PNT		PNT		PNT	E.S	PNT		
215	RESTROOM	T		B1	PNT	GWB	PNT	GWB	PNT	GWB	PNT	GWB	PNT	E.S	PNT		SEE RESTROOM ELEV.
216	BREAK ROOM	T		B2	PNT		PNT		PNT		PNT		PNT	E.S	PNT		
217	STORE ROOM	CONC.	PNT	B2	PNT		PNT		PNT		PNT		PNT	E.S	PNT		
218	STORAGE	CONC.	PNT	B2	PNT		PNT		PNT		PNT		PNT	E.S	PNT		

FLOOR		BASE		WALL		CEILING	
CONC.	CONCRETE	B-1	TILE	T	PORCELAIN TILE	GWB	GYPSUM BOARD
CT	CARPET TILE	B-2	1X6 WITH ROUTED EDGES	CMU	CONCRETE MASONRY UNIT	CONC.	CONCRETE
T	PORCELAIN TILE	VCB	VINYL COVE BASE	CWB	CEMENT WALL BOARD	PNT.	PAINTED FINISH
HW	HARD WOOD	PNT	PAINTED FINISH	GWB	GYPSUM WALL BOARD	ACT	ACOUSTIC CEILING TILE
				PNT	PAINTED FINISH	E.S	EXPOSED STRUCTURE
				BB	PLYWOOD BEAD BOARD SHEATHING		
				EMW	EXISTING MASONRY WALL		

SECOND FLOOR DOOR SCHEDULE

DOOR NUMBER	DESCRIPTION	TYPE	QTY	SIZE W	SIZE H	SIZE T	HARDWARE	CLOSURE (Y, N)	KICK PLATES	REMARKS
200A	SINGLE PANE FRENCH			48"	80"					MEDIUM STILE AND RAIL IMPACT RESISTANT GLASS SINGLE DOOR
200B	SINGLE PANE FRENCH			48"	80"					MEDIUM STILE AND RAIL IMPACT RESISTANT GLASS SINGLE DOOR
201	FRENCH DOOR	C		42"	108"					PROVIDE NEW HARDWARE,DOOR TRIM AND FRAME
202	WOOD SINGLE PANE GLASS	D		36"	84"					DOOR WITH SIDELIGHT ASSEMBLY
203	WOOD SINGLE PANE GLASS	D		36"	84"					DOOR WITH SIDELIGHT ASSEMBLY
204A	FRENCH DOOR	C		36"	108"					PROVIDE NEW HARDWARE,DOOR TRIM AND FRAME
204B	FRENCH DOOR	C		36"	108"					PROVIDE NEW HARDWARE,DOOR TRIM AND FRAME
205	WOOD SINGLE PANE GLASS	E		36"	84"					DOOR WITH SIDELIGHT ASSEMBLY
206	WOOD SINGLE PANE GLASS	E		36"	84"					DOOR WITH SIDELIGHT ASSEMBLY ADD ALTERNATE NO.1
207	WOOD SINGLE PANE GLASS	E		36"	84"					DOOR WITH SIDELIGHT ASSEMBLY ADD ALTERNATE NO.1
209	SOLID CORE WOOD STYLE AND RAIL	A		36	80					DOOR WITH SIDELIGHT ASSEMBLY ADD ALTERNATE NO.1
210	FRENCH DOOR	C		42"	108"					PROVIDE NEW HARDWARE,DOOR TRIM AND FRAME
211	WOOD SINGLE PANE GLASS	D		36"	84"					DOOR WITH SIDELIGHT ASSEMBLY
212	WOOD SINGLE PANE GLASS	D		36"	84"					DOOR WITH SIDELIGHT ASSEMBLY
213	FRENCH DOOR	C		36"	108"					PROVIDE NEW HARDWARE,DOOR TRIM AND FRAME
214	SOLID CORE WOOD STYLE AND RAIL	A		36"	80"					
215	SOLID CORE WOOD STYLE AND RAIL	A		36"	80"					
216A	SOLID CORE WOOD STYLE AND RAIL	A		36"	80"					
216B	SOLID CORE WOOD			36"	80"					EXISTING DOOR TO BE REPAINTED
217A	HOLLOW METAL	F		30"	84"					
217B	HOLLOW METAL	F		30"	84"					
217C	SOLID CORE WOOD STYLE AND RAIL	A		36"	80"					DOOR TO REMAIN
217D	SOLID CORE WOOD STYLE AND RAIL	A		36"	80"					DOOR TO REMAIN
218	HOLLOW METAL	A		36"	80"					

NOTE:
SEE SHEET A4.0 FOR DOOR ELEVATIONS.

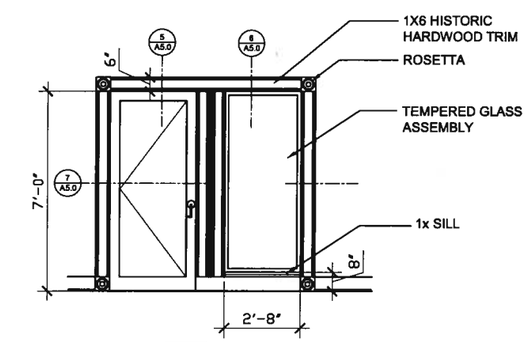

D

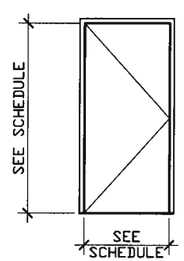

F

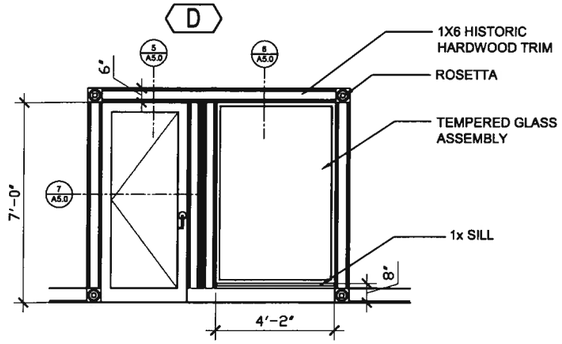

E

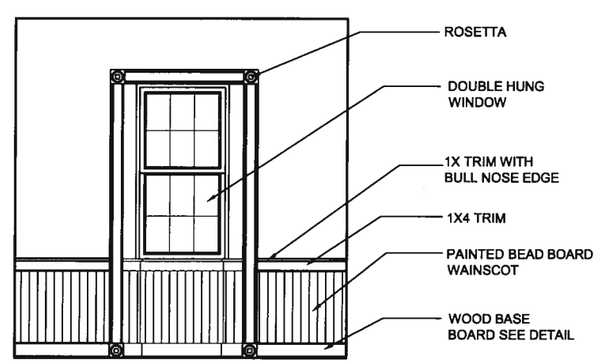

1 | A4.0A | A4.0A
TYPICAL WINDOW DETAIL
SCALE: 3/8"=1'-0"

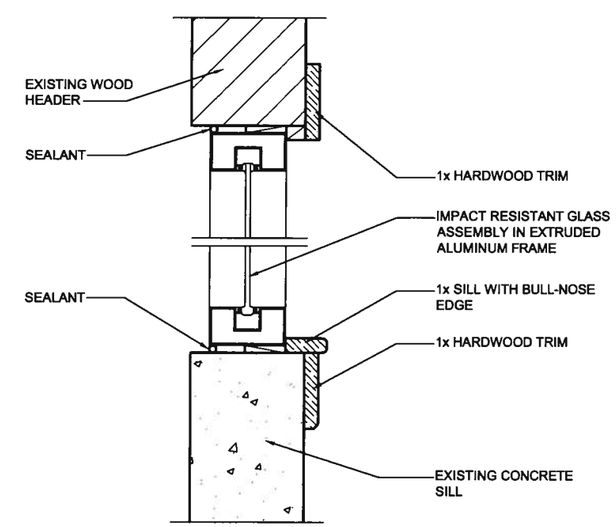

2 | A4.0A | A4.0A
HEADER AND SILL DETAIL
SCALE: 3"=1'-0"

REVISIONS

NO:	DATE:	REMARKS
1	2/23/16	ADDENDUM NO.1

CONSULTANTS

Jaredian Design Group
Architects, Engineers, Construction Managers
No.33 Dronningens Gade - Queen's Quarter
Post Office Box 6218
St. Thomas, U.S. Virgin Islands 00804
telephone: 340.777.1500 fax: 340.777.1601
e-mail: jaredian2@vipowernet.net

THESE PLANS AND THE DESIGNS CONTAINED HEREIN ARE THE SOLE PROPERTY OF JAREDIAN DESIGN GROUP. THESE PLANS MAY NOT BE REPRODUCED WITHOUT THE WRITTEN PERMISSION OF JAREDIAN DESIGN GROUP. UNAUTHORIZED USE SHALL INVITE A CLAIM FOR COMPENSATION. THE USE BY ANY PERSON OR FIRM OF THESE PLANS OR ANY PART THEREOF SHALL NOT IN ANY WAY SUBJECT JAREDIAN DESIGN GROUP TO ANY COST OR DAMAGES FOR ANY ERROR OR OMISSION CONTAINED THEREIN.

PHASE II RENOVATION TO
PARCEL NO 19A & 20
KONGENS GADE
KINGS QUARTER
ST. THOMAS,
U.S.V.I. 00802-5858

DATE: 12-2-15
DRAWN BY: R.O.P
CHECKED BY: J.P.W.
APPROVED BY: J.P.W.
PROJECT NO: 13-002
CONTRACT NO:
SHEET NO: A4.0A
SCHEDULES

REGISTERED ARCHITECT U.S. VIRGIN ISLANDS

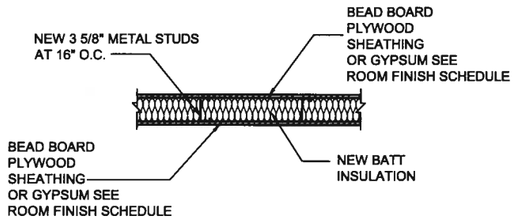

1 WALL DETAIL TYPE W1

A5.0 | A5.0 SCALE: 1"=1'-0"

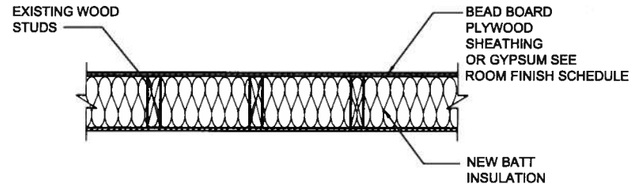

2 WALL DETAIL TYPE W2

A5.0 | A5.0 SCALE: 1"=1'-0"

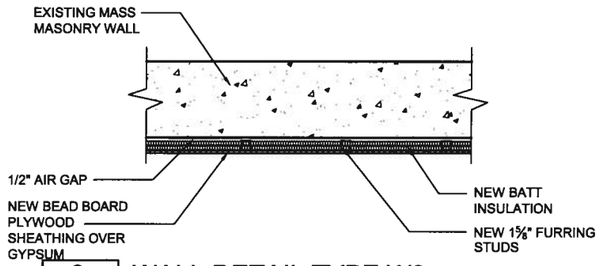

3 WALL DETAIL TYPE W3

A5.0 | A5.0 SCALE: 1"=1'-0"

NOTE:

NEW 5/8" MOISTURE AND MOLD RESISTANT GYPSUM BOARD SHEATHING SHALL BE USED FOR THE INTERIOR WALLS OF THE RESTROOM

WALLS THAT ARE NOTED TO TO RECEIVE BEAD BOARD SHEATHING WAINSCOT SHALL BE FINISHED WITH GYPSUM BOARD SUB SHEATHING .

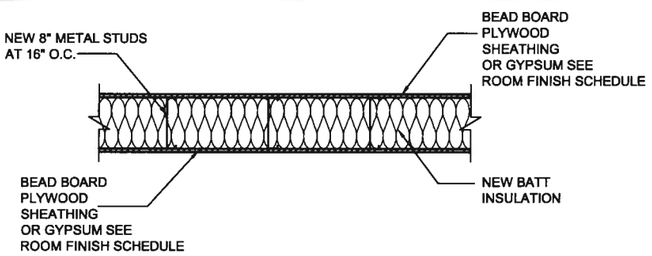

4 WALL DETAIL TYPE W2

A5.0 | A5.0 SCALE: 1"=1'-0"

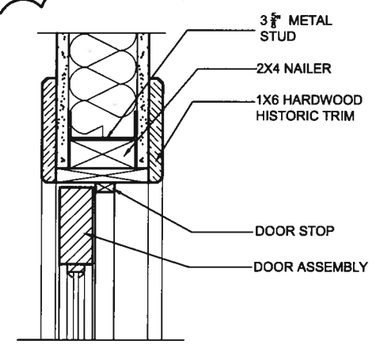

5 DOOR HEADER DETAIL

A5.0 | A5.0 SCALE: 3"=1'-0"

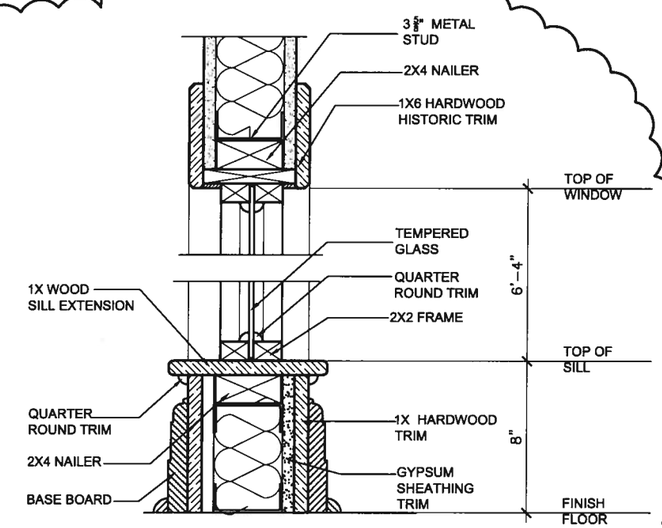

6 WINDOW HEAD AND SILL DETAIL

A5.0 | A5.0 SCALE: 3"=1'-0"

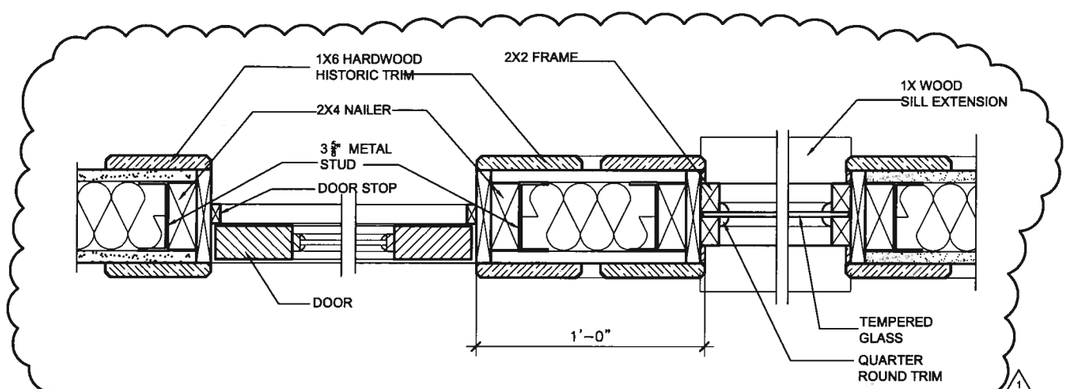

7 DOOR AND WINDOW JAMB DETAIL

A5.0 | A5.0 SCALE: 3"=1'-0"

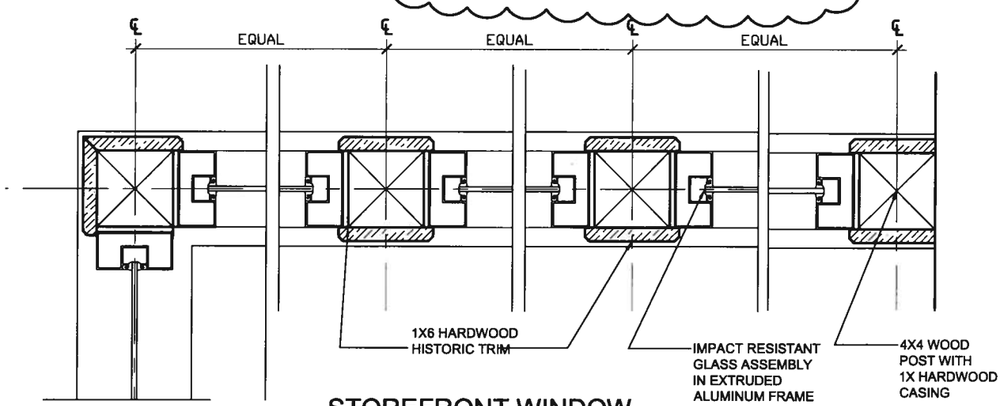

8 STOREFRONT WINDOW JAMB DETAIL

A5.0 | A5.0 SCALE: 3"=1'-0"

REVISIONS		
NO:	DATE:	REMARKS
1	8-14-14	REVISION NO.1
1	2/23/15	ADDENDUM NO.1

CONSULTANTS

Jaredian Design Group
Architects, Engineers, Construction Managers
No.33 Dronningens Gade - Queen's Quarter
Post Office Box 6218
St. Thomas, U.S. Virgin Islands 00804
telephone: 340.777.1600 fax: 340.777.1601
e-mail: jaredian2@vipowernet.net

THESE PLANS AND THE DESIGNS CONTAINED HEREIN ARE THE SOLE PROPERTY OF JAREDIAN DESIGN GROUP . THESE PLANS MAY NOT BE REPRODUCED WITHOUT THE WRITTEN PERMISSION OF JAREDIAN DESIGN GROUP. UNAUTHORIZED USE SHALL WAIVE A CLAIM FOR COMPENSATION. THE USE BY ANY PERSON OR FIRM OF THESE PLANS OR ANY PART THEREOF SHALL NOT IN ANY WAY SUBJECT JAREDIAN DESIGN GROUP TO ANY COST OR DAMAGES FOR ANY ERROR OR OMISSION CONTAINED THEREIN.

PHASE II RENOVATION TO
PARCEL NO 19A & 20
KONGENS GADE
KINGS QUARTER
ST. THOMAS,
U.S.V.I. 00802-5858

DATE: 12-2-15
DRAWN BY: R.O.P
CHECKED BY: J.P.W.
APPROVED BY: J.P.W.

PROJECT NO: 13-002
CONTRACT NO:

SHEET NO:
A5.0
WALL DETAILS

REGISTERED ARCHITECT U.S. VIRGIN ISLANDS