PHASE II RENOVATION TO PARCEL NO.19A AND 20

KONGENS GADE
KINGS QUARTER
ST. THOMAS, USVI 00802-5858

PREPARED BY

JDG Jaredian Design Group

Architects, Engineers and Planners

No. 33 Dronningens Gade- Queen's Quarter
Post Office Box 6218
St. Thomas, U.S. Virgin Islands
Telephone 340.777.1600 Fax 340.777.1601

SITE

LOCATION MAP

NOT TO SCALE

INDEX OF DRAWINGS

A0.0	COVER SHEET
A0.1	NOTES AND ABBREVIATIONS
C1.0	AS BUILT SURVEY
C2.0	SITE DETAILS
2A1.0A	SECOND FLOOR EXISTING PLAN
2A1.0B	SECOND FLOOR EXISTING PLAN
2A1.1A	SECOND FLOOR DEMOLITION PLAN
2A1.1B	SECOND FLOOR DEMOLITION PLAN
2A1.2A	PROPOSED IDENTIFICATION FLOOR PLAN
2A1.2B	PROPOSED IDENTIFICATION FLOOR PLAN
2A1.3A	SECOND FLOOR PLAN DIMENSION
2A1.3B	SECOND FLOOR PLAN DIMENSION
2A1.4A	SECOND FLOOR REFLECTED CEILING PLAN
2A1.4B	SECOND FLOOR REFLECTED CEILING PLAN
3A1.0	ARCHITECTURAL ROOF PLAN
A2.0	EXISTING ELEVATIONS
A2.1	EXISTING ELEVATIONS
A2.2	EXISTING ELEVATIONS
A2.3	PROPOSED ELEVATIONS
A2.4	PROPOSED ELEVATIONS
A2.5	PROPOSED ELEVATIONS
A3.1	ENLARGED RESTROOM PLANS
A3.1A	ENLARGED PLANS
A3.2	RESTROOM ELEVATIONS
A3.3	CASEWORK ELEVATIONS
A4.0	DOOR,WINDOW AND ROOM FINISH SCHEDULE
A4.0A	DOOR AND ROOM FINISH SCHEDULE
A4.1	WINDOW ELEVATIONS
A5.0	WALL DETAILS
A5.1	DETAILS
A5.2	DETAILS
A5.3	DETAILS
A5.4	DETAILS
M0.1	HVAC LEGEND SCHEDULES AND NOTES
M0.2	HVAC SCHEDULES
2M1.2A	SECOND FLOOR HVAC PLAN
2M1.2B	SECOND FLOOR HVAC PLAN
M2.0	HVAC DETAILS
M2.1	HVAC DETAILS
P0.0	PLUMBING NOTES AND LEGEND
P2.0	SECOND FLOOR PLUMBING PLAN
P2.1	SECOND FLOOR PLUMBING PLAN
E0.1	ELECTRICAL NOTES AND PANEL SCHEDULES
2E1.1A	SECOND FLOOR POWER PLAN
2E1.1B	SECOND FLOOR POWER PLAN
2E1.2A	SECOND FLOOR POWER PLAN
2E1.2B	SECOND FLOOR POWER PLAN

GENERAL NOTES:

1. THE INTENT OF THIS CONTRACT IS TO PROVIDE FOR THE CONSTRUCTION AND COMPLETION OF THE WORK DESCRIBED IN THE DRAWINGS. THE PRECISE DETAILS OF PERFORMING THE WORK ARE NOT STIPULATED EXCEPT AS CONSIDERED ESSENTIAL FOR THE SUCCESSFUL COMPLETION OF THE WORK. FURNISH ALL LABOR, MATERIAL, EQUIPMENT, TOOLS, TRANSPORTATION, AND SUPPLIES NECESSARY TO COMPLETE THE WORK ACCORDING TO THE CONTRACT.

2. THE CONTRACTOR SHALL NOTIFY THE ARCHITECT OF ALL PROPOSED SOURCES OF MATERIAL BEFORE DELIVERY TO THE PROJECT SITE TO EXPEDITE MATERIAL INSPECTION AND TESTING IF REQUIRED BY THE ARCHITECT. STORED MATERIAL PREVIOUSLY APPROVED FOR PAYMENT MAY AGAIN BE INSPECTED BY THE ARCHITECT FOR COMPLIANCE WITH APPLICABLE CONTRACT SPECIFICATION PRIOR TO BEING INCORPORATED INTO THE WORK.

3. THE CONTRACTOR IS RESPONSIBLE FOR THE SECURITY OF ALL STORED MATERIAL.

4. THE CONTRACTOR SHALL PROVIDE ALL SPACE OUTSIDE THE CONSTRUCTION LIMITS NEEDED FOR STORAGE OF MATERIAL. DO NOT USE PRIVATE PROPERTY FOR STORAGE WITHOUT WRITTEN PERMISSION OF THE OWNER OR LESSEE. FURNISH COPIES OF ALL SUCH AGREEMENTS TO THE ARCHITECT. ANY AREA PROVIDED BY THE OWNER FOR THE STORAGE OF MATERIAL SHALL BE RESTORED TO THEIR ORIGINAL CONDITION AT THE END OF THE CONTRACT.

5. THE EXISTING UTILITIES SHOWN ARE FOR INFORMATION ONLY. THERE MAY BE OTHER UTILITIES NOT SHOWN ON THESE PLANS, AND THE ARCHITECT ASSUMES NO RESPONSIBILITY FOR THEIR LOCATION. IT SHALL BE THE RESPONSIBILITY OF THE CONTRACTOR TO VERIFY THE LOCATIONS IN THE FIELD WITHIN THE LIMITS OF THE WORK. ALL DAMAGE MADE TO EXISTING UTILITIES, WHETHER SHOWN OR NOT ON THE PLANS SHALL BE REPAIRED AT THE CONTRACTOR'S EXPENSE.

6. ALL EXCESS MATERIAL SHALL BE REMOVED FROM THE CONSTRUCTION SITE AND DISPOSED OF BY THE CONTRACTOR AT HIS OWN EXPENSE.

7. WORK THAT DOES NOT CONFORM TO THE CONTRACT, OR TO PREVAILING INDUSTRY STANDARDS WHERE NO SPECIFIC CONTRACT REQUIREMENTS ARE NOTED SHALL BE REMOVED AND REPLACED AT NO COST TO THE OWNER.

8. DO NOT DISTURB AREAS OUTSIDE OF THE LIMITS OF THE AREAS SHOWN ON THE PLANS. DISTURBANCES OUTSIDE THESE LIMITS SHALL BE REPAIRED AND/OR REPLACED AT CONTRACTOR'S EXPENSE.

9. THE CONTRACTOR SHALL PROVIDE DUST CONTROL AND STREET PROTECTION AT ALL TIMES. STREET SHALL NOT BE LEFT IN AN UNSAFE OR MUDDY CONDITION.

10. ALL WORK SHALL BE PERFORMED IN A FINISHED AND WORKMANLIKE MANNER TO THE SATISFACTION OF THE OWNER, AND IN ACCORDANCE WITH THE BEST RECOGNIZED TRADE PRACTICES.

11. THE ARCHITECT SHALL BE NOTIFIED A MINIMUM OF 48 HOURS PRIOR TO STARTUP OF CONSTRUCTION BY THE CONTRACTOR.

12. DEVIATION OF THESE PLANS AND SPECIFICATIONS WITHOUT THE PRIOR WRITTEN CONSENT OF THE ARCHITECT MAY BE CAUSE FOR THE WORK TO BE REJECTED BY THE ARCHITECT.

13. CONTRACTOR WARRANTS THAT HIS EMPLOYEES, AGENTS, AND SUBCONTRACTORS POSSESS THE EXPERIENCE, KNOWLEDGE AND CHARACTER NECESSARY TO QUALIFY THEM INDIVIDUALLY FOR THE PARTICULAR CONSTRUCTION TECHNIQUES THEY PERFORM IN CONNECTION WITH THE TASKS TO BE PERFORMED UNDER THE CONTRACT. THE CONTRACTOR SHALL ENSURE THAT ALL CONSTRUCTION BE IN STRICT COMPLIANCE WITH ALL OSHA (OCCUPATIONAL SAFETY AND HEALTH ADMINISTRATION), AND LOCAL HEALTH AND SAFETY CODES.

14. THE CONTRACTOR SHALL CHECK, REVIEW, AND VERIFY ALL PLANS, DIMENSIONS, AND SITE CONDITIONS PRIOR TO CONSTRUCTION. ANY DISCREPANCIES OR OMMISIONS NOTED ON THE DRAWINGS OR IN THE SPECIFICATIONS OR ANY VARIATIONS NEEDED IN ORDER TO CONFORM TO CODE, RULES, AND REGULATIONS SHALL BE REPORTED IN WRITING TO THE ARCHITECT.

15. ALL MATERIALS AND CONSTRUCTION SHALL COMPLY WITH THE LATEST EDITIONS OF THE U.S. VIRGIN ISLANDS BUILDING CODE, THE ACI, AND THE ASTM.

16. THE PREMISES SHALL BE KEPT FROM ACCUMULATION OF WASTE MATERIAL AND DEBRIS, AND AT THE END OF THE JOB THE CONTRACTOR SHALL REMOVE ALL RUBBISH, SURPLUS MATERIAL, AND TOOLS AND LEAVE THE WORK AREA BROOM CLEAN.

ARCHTECTURAL ABBREVIATIONS

ACT.	ACOUSTIC CEILING TILE
AES.	ARCHITECTURALLY EXPOSED STEEL
A.F.F.	ABOVE FINISH FLOOR
B.T.W.	BOTTOM OF WALL
BLDG.	BUILDING
BB	BEAD BOARD SHEATHING
CONC.	CONCRETE
CMU.	CONCRETE MASONRY UNIT
CWB.	CEMENT WALL BOARD
DIA.	DIAMETER
EA.	EACH
EL.	ELEVATION
E.S.	EXPOSED STRUCTURE
EQ.	EQUAL
EXIST.	EXISTING
F.D	FLOOR DRAIN
F.F.	FINISH FLOOR
FIN.	FINISH
FLG.	FLOORING
FTG.	FOOTING
GALV.	GALVANIZED
GWB.	GYPSUM WALL BOARD
GYP.	GYPSUM
HOR.	HORIZONTAL
MTL.	METAL
MO.	MASONRY OPENING
O.C.	ON CENTER
O.D.	OUTSIDE DIAMETER
PLYW.	PLYWOOD
PNL.	PANEL
PNT.	PAINT
PTD.	PAINTED
R.W.L.	RAIN WATER LEADER
T.O.W.	TOP OF WALL
T.S.	TUBULAR STEEL
U.N.O	UNLESS NOTED OTHERWISE
VBC.	VINYL BASECOVE
VCT.	VINYL COMPOSITION TILE
WD.	WOOD

ARCHITECTURAL SYMBOLS:

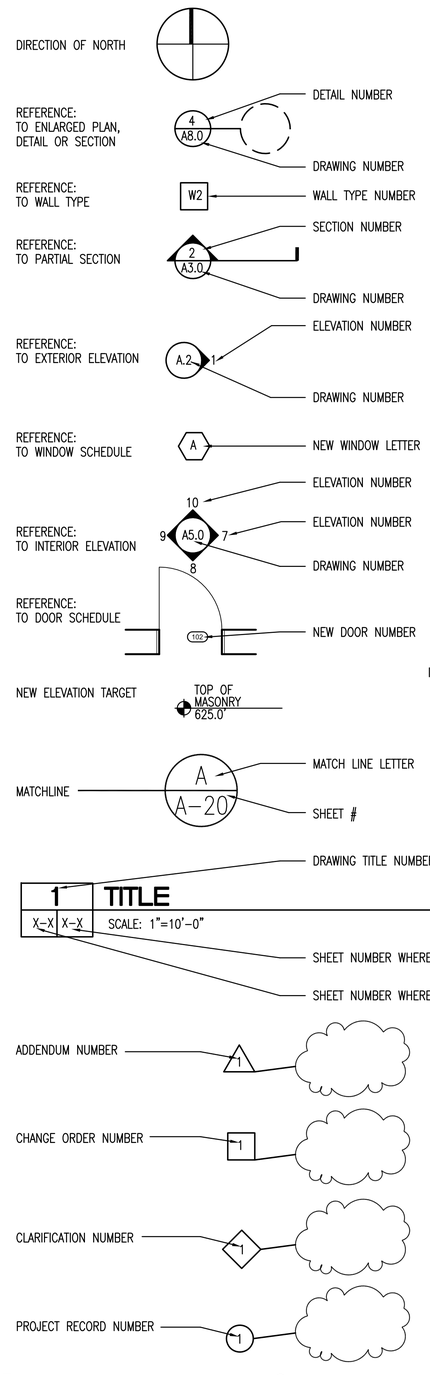

MATERIALS LEGEND:

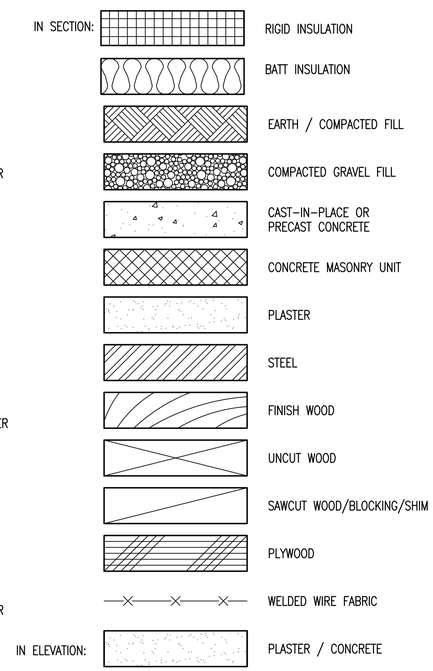

REVISIONS		
NO:	DATE:	REMARKS
1	8-14-14	REVISION NO.1

CONSULTANTS

Jaredian Design Group
Architects, Engineers, Construction Managers
No.33 Dronningens Gade - Queen's Quarter
Post Office Box 6218
St. Thomas, U.S. Virgin Islands 00804
telephone: 340.777.1600 fax: 340.777.1601
e-mail: jaredian2@vipowernet.net

THESE PLANS AND THE DESIGNS CONTAINED HEREIN ARE THE SOLE PROPERTY OF JAREDIAN DESIGN GROUP. THESE PLANS MAY NOT BE REPRODUCED WITHOUT THE WRITTEN PERMISSION OF JAREDIAN DESIGN GROUP. UNAUTHORIZED USE SHALL INVITE A CLAIM FOR COMPENSATION. THE USE BY ANY PERSON OR FIRM OF THESE PLANS OR ANY PART THEREOF SHALL NOT IN ANY WAY SUBJECT JAREDIAN DESIGN GROUP TO ANY COST OR DAMAGES FOR ANY ERROR OR OMISSION CONTAINED THEREIN.

PHASE II RENOVATION TO
PARCEL NO 19A & 20
KONGENS GADE
KINGS QUARTER
ST. THOMAS,
U.S.V.I. 00802-5858

DATE: 12-2-15
DRAWN BY: R.O.P.
CHECKED BY: J.P.W.
APPROVED BY: J.P.W.

PROJECT NO: 13-002
CONTRACT NO:

SHEET NO: **A0.1**

GENERAL NOTES AND ABBREVIATIONS

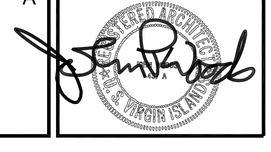

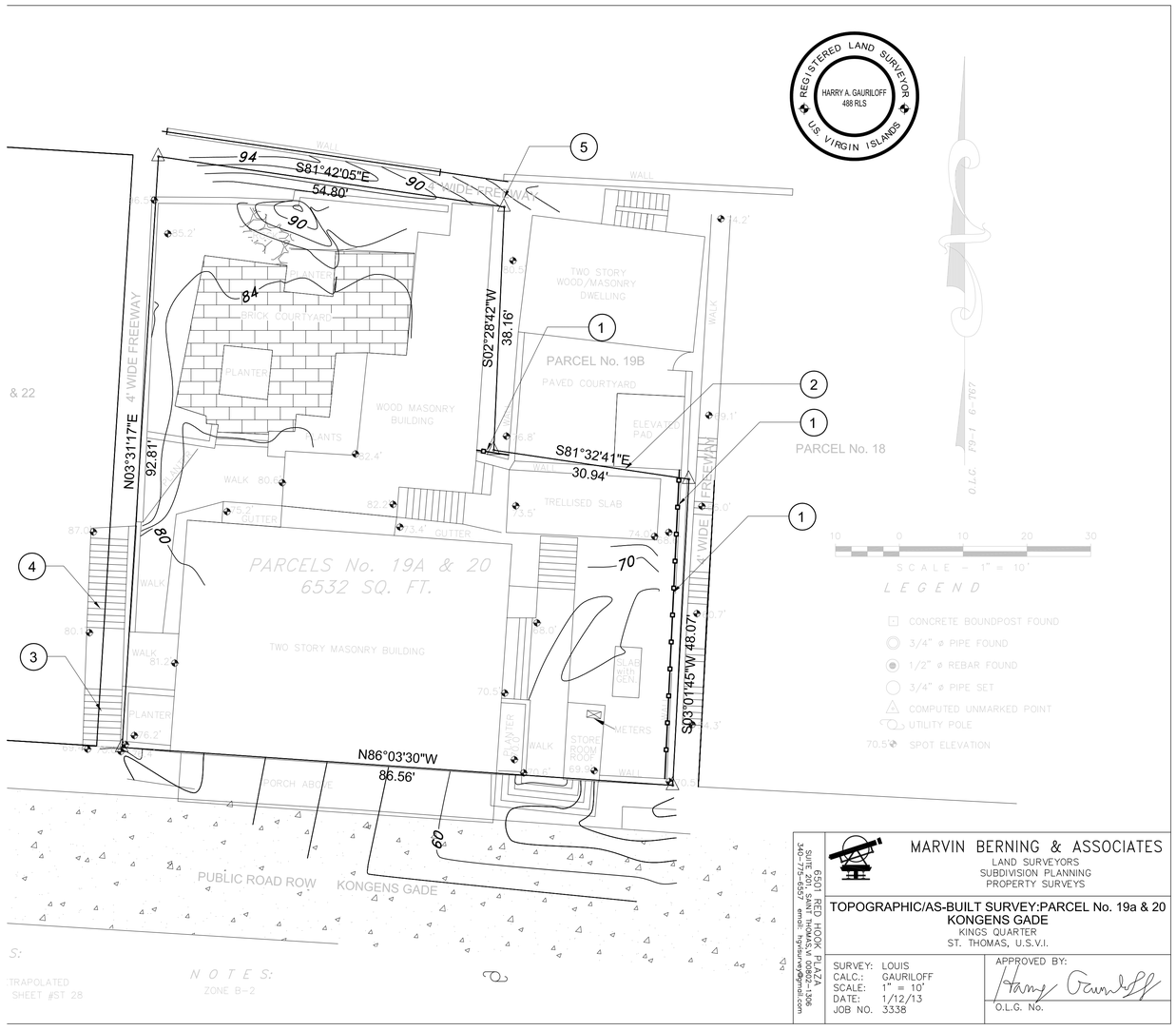

MARVIN BERNING & ASSOCIATES
LAND SURVEYORS
SUBDIVISION PLANNING
PROPERTY SURVEYS

SUITE 6301 RED HOOK PLAZA
ST. THOMAS, U.S.V.I. 00802-1206
340-775-6537 email: hgvsurvey@gmail.com

TOPOGRAPHIC/AS-BUILT SURVEY:PARCEL No. 19a & 20
KONGENS GADE
KINGS QUARTER
ST. THOMAS, U.S.V.I.

SURVEY: LOUIS
CALC.: GAURILOFF
SCALE: 1" = 10'
DATE: 1/12/13
JOB NO. 3338

APPROVED BY:
O.L.G. No.

1	ASBUILT SURVEY
C1.0 C1.0	SCALE: 3/32"=1'-0"

CONSTRUCTION TASK NOTES

1. LOCATION OF NEW SECURITY FENCING. SEE DETAILS ON SHEET NO. C2.0
2. NEW TRELLIS PRIVACY WALL
3. LOCATION OF EXISTING BRICK STEPS TO BE REMOVED, RE-POINTED AND RESET. PROVIDE ALLOWANCE FOR APPROXIMATELY 100 SQUARE FEET OF REPLACEMENT.
4. LOCATION OF EXISTING BRICK STEPS TO BE RE-ALIGNED
5. REMOVE AND DISCARD EXISTING PLYWOOD BARRICADE AND INSTALL NEW FENCING.

REVISIONS

NO:	DATE:	REMARKS
1	8-14-14	REVISION NO.1

CONSULTANTS

Jaredian Design Group
Architects, Engineers, Construction Managers
No.33 Dronningens Gade - Queen's Quarter
Post Office Box 6218
St. Thomas, U.S. Virgin Islands 00804
telephone: 340.777.1600 fax: 340.777.1601
e-mail: jaredian2@vipowernet.net

THESE PLANS AND THE DESIGNS CONTAINED HEREIN ARE THE SOLE PROPERTY OF JAREDIAN DESIGN GROUP. THESE PLANS MAY NOT BE REPRODUCED WITHOUT THE WRITTEN PERMISSION OF JAREDIAN DESIGN GROUP. UNAUTHORIZED USE SHALL INVITE A CLAIM FOR COMPENSATION. THE USE BY ANY PERSON OR FIRM OF THESE PLANS OR ANY PART THEREOF SHALL NOT IN ANY WAY SUBJECT JAREDIAN DESIGN GROUP TO ANY COST OR DAMAGES FOR ANY ERROR OR OMISSION CONTAINED THEREIN.

PHASE II RENOVATION TO
PARCEL NO 19A & 20
KONGENS GADE
KINGS QUARTER
ST. THOMAS,
U.S.V.I. 00802-5858

DATE: 12-2-15
DRAWN BY:
CHECKED BY: J.P.W.
APPROVED BY: J.P.W.

PROJECT NO: 13-002
CONTRACT NO:

SHEET NO: C1.0
ASBUILT SURVEY

REGISTERED ARCHITECT
U.S. VIRGIN ISLANDS

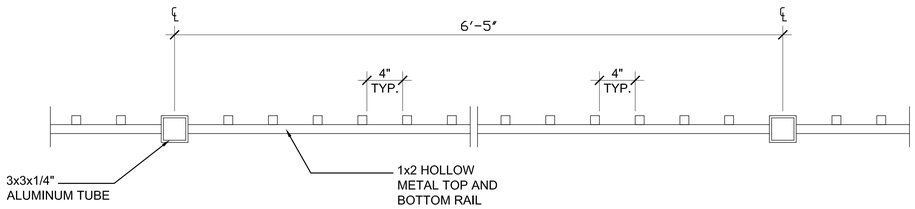

1 SECURITY FENCE ASSEMBLY PLAN

C2.0 | C2.0 SCALE: 1-1/2"=1'-0"

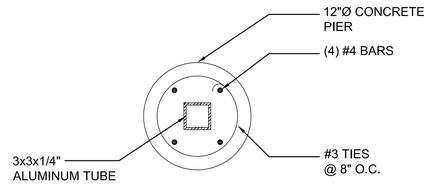

2 CONCRETE PIER PLAN

C2.0 | C2.0 SCALE: 1-1/2"=1'-0"

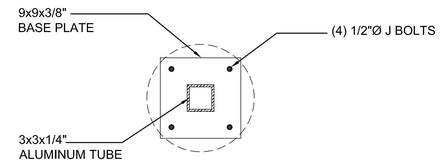

3 CONCRETE PIER PLAN

C2.0 | C2.0 SCALE: 1-1/2"=1'-0"

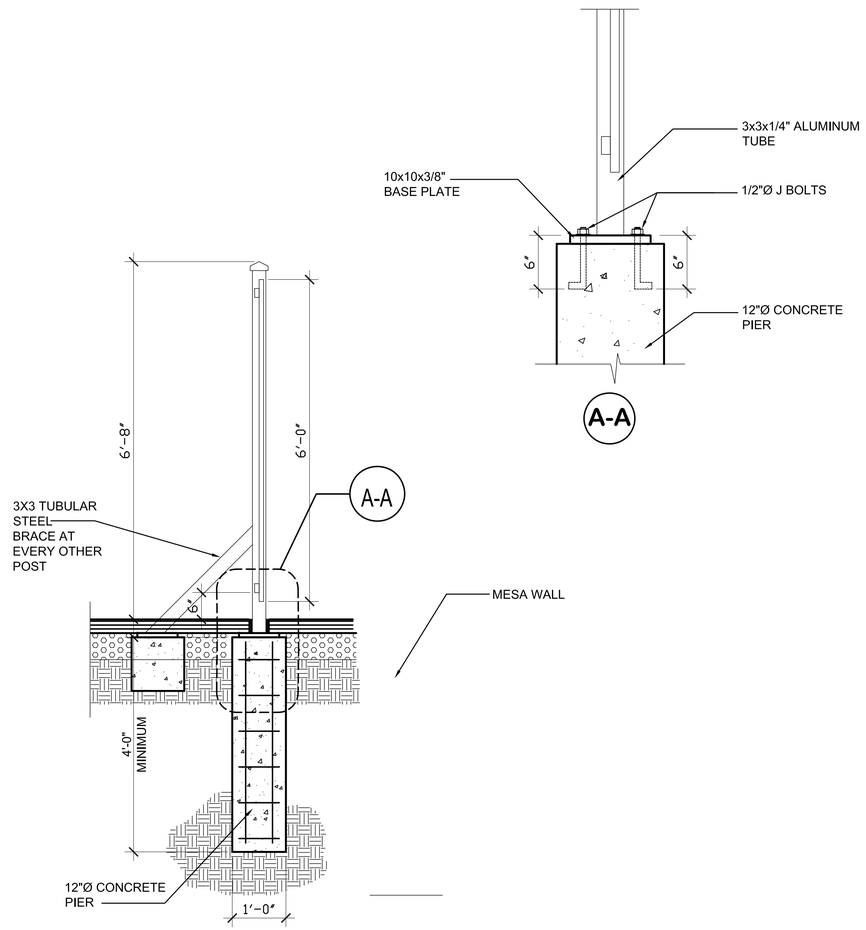

4 DETAIL

C2.0 | C2.0 SCALE: 3/4"=1'-0"

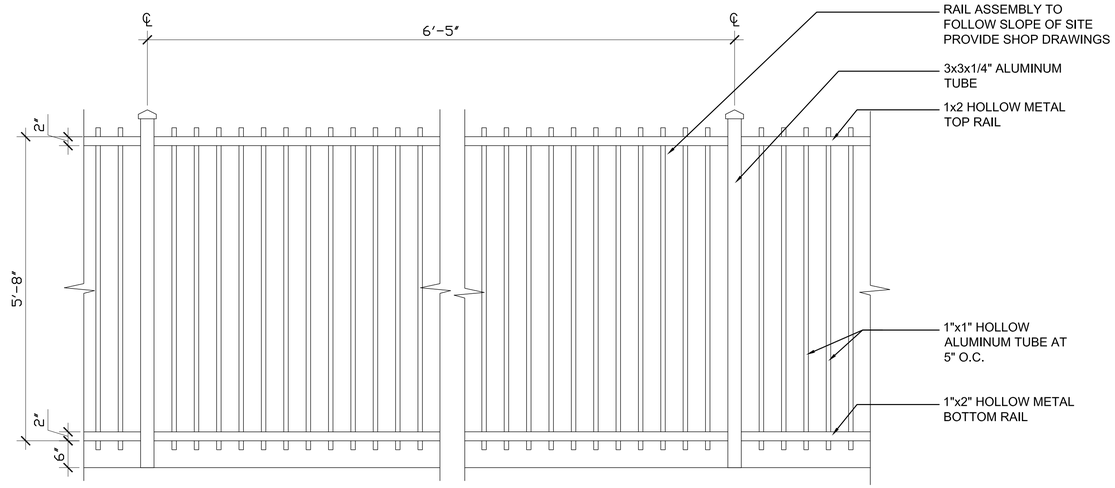

5 SECURITY FENCE ASSEMBLY

C2.0 | C2.0 SCALE: 3/4"=1'-0"

REVISIONS		
NO:	DATE:	REMARKS

CONSULTANTS

Jaredian Design Group
Architects, Engineers, Construction Managers
No.33 Dronningens Gade - Queen's Quarter
Post Office Box 6218
St. Thomas, U.S. Virgin Islands 00804
telephone: 340.777.1600 fax: 340.777.1601
e-mail: jaredian2@vipowernet.net

THESE PLANS AND THE DESIGNS CONTAINED HEREIN ARE THE SOLE PROPERTY OF JAREDIAN DESIGN GROUP. THESE PLANS MAY NOT BE REPRODUCED WITHOUT THE WRITTEN PERMISSION OF JAREDIAN DESIGN GROUP. UNAUTHORIZED USE SHALL INVITE A CLAIM FOR COMPENSATION. THE USE BY ANY PERSON OR FIRM OF THESE PLANS OR ANY PART THEREOF SHALL NOT IN ANY WAY SUBJECT JAREDIAN DESIGN GROUP TO ANY COST OR DAMAGES FOR ANY ERROR OR OMISSION CONTAINED THEREIN.

PHASE II RENOVATION TO
PARCEL NO 19A & 20
KONGENS GADE
KINGS QUARTER
ST. THOMAS,
U.S.V.I. 00802-5858

DATE: 12-2-15
DRAWN BY: R.O.P
CHECKED BY: J.P.W.
APPROVED BY: J.P.W.

PROJECT NO: 13-002
CONTRACT NO:

SHEET NO:
C2.0
DETAILS

REGISTERED ARCHITECT U.S. VIRGIN ISLANDS

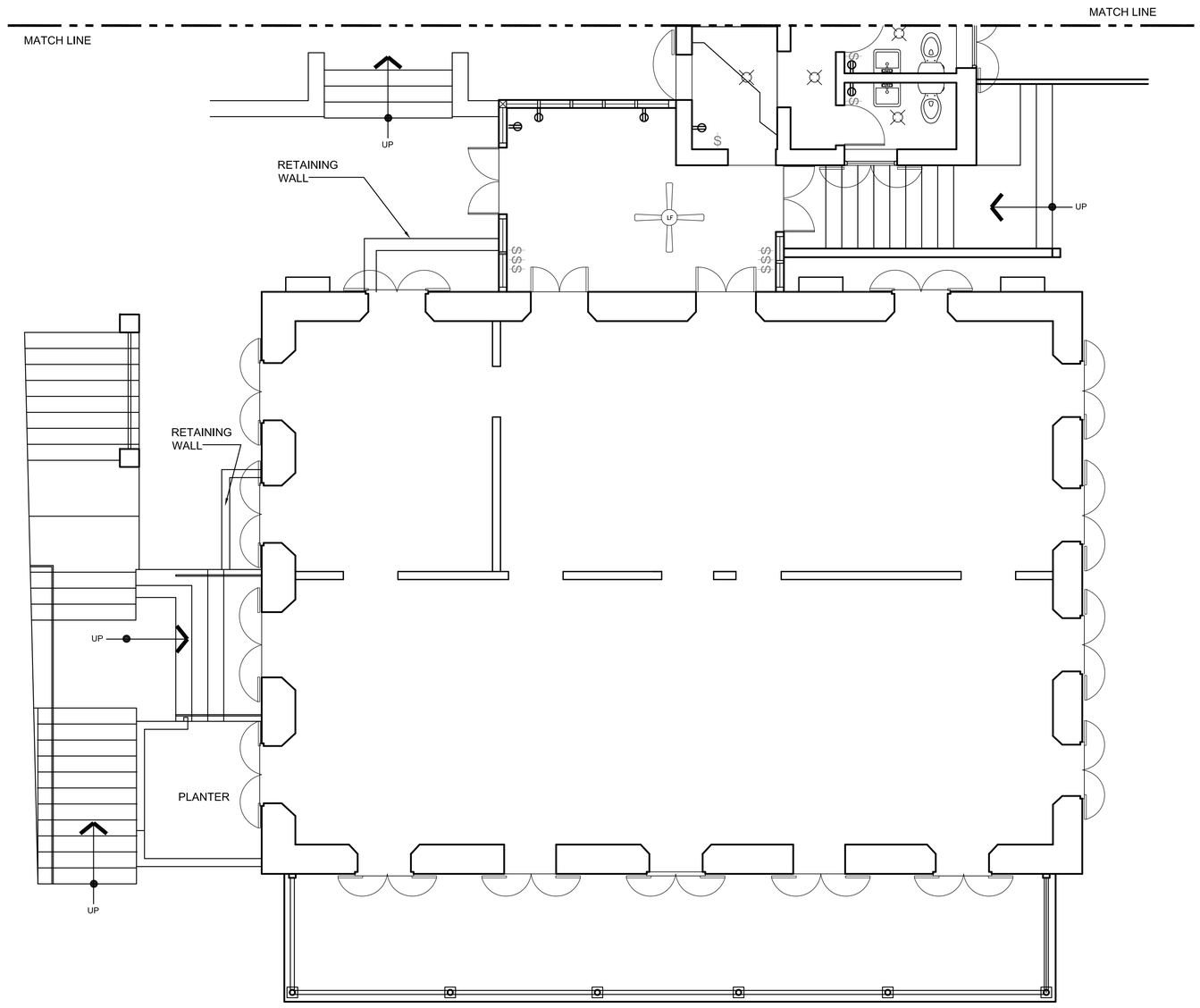

LEGEND

- ELECTRICAL RECEPTACLE
- DATA/PHONE PORT
- LIGHT SWITCH
- PANEL BOX
- CEILING MOUNTED LIGHT FIXTURE
- WALL MOUNTED LIGHT FIXTURE
- TRACK LIGHTS
- FLUORESCENT LIGHT FIXTURE
- COMBINATION CEILING FAN WITH LIGHT KIT
- CEILING FAN

N

PLAN

1	
2A1.0A	2A1.0A

SECOND FLOOR EXISTING FLOOR PLAN

SCALE: 1/4"=1'-0"

REVISIONS

NO:	DATE:	REMARKS

CONSULTANTS

Jaredian Design Group
Architects, Engineers, Construction Managers
No.33 Dronningens Gade - Queen's Quarter
Post Office Box 6218
St. Thomas, U.S. Virgin Islands 00804
telephone: 340.777.1600 fax: 340.777.1601
e-mail: jaredian2@vipowernet.net

THESE PLANS AND THE DESIGNS CONTAINED HEREIN ARE THE SOLE PROPERTY OF JAREDIAN DESIGN GROUP. THESE PLANS MAY NOT BE REPRODUCED WITHOUT THE WRITTEN PERMISSION OF JAREDIAN DESIGN GROUP. UNAUTHORIZED USE SHALL INVITE A CLAIM FOR COMPENSATION. THE USE BY ANY PERSON OR FIRM OF THESE PLANS OR ANY PART THEREOF SHALL NOT IN ANY WAY SUBJECT JAREDIAN DESIGN GROUP TO ANY COST OR DAMAGES FOR ANY ERROR OR OMISSION CONTAINED THEREIN.

PHASE II RENOVATION TO
PARCEL NO 19A & 20
KONGENS GADE
KINGS QUARTER
ST. THOMAS,
U.S.V.I. 00802-5858

DATE: 12-2-15
DRAWN BY: R.O.P
CHECKED BY: J.P.W.
APPROVED BY: J.P.W.

PROJECT NO: 13-002
CONTRACT NO:

SHEET NO:
2A1.0A
EXISTING SECOND FLOOR PLAN

REGISTERED ARCHITECT
U.S. VIRGIN ISLANDS

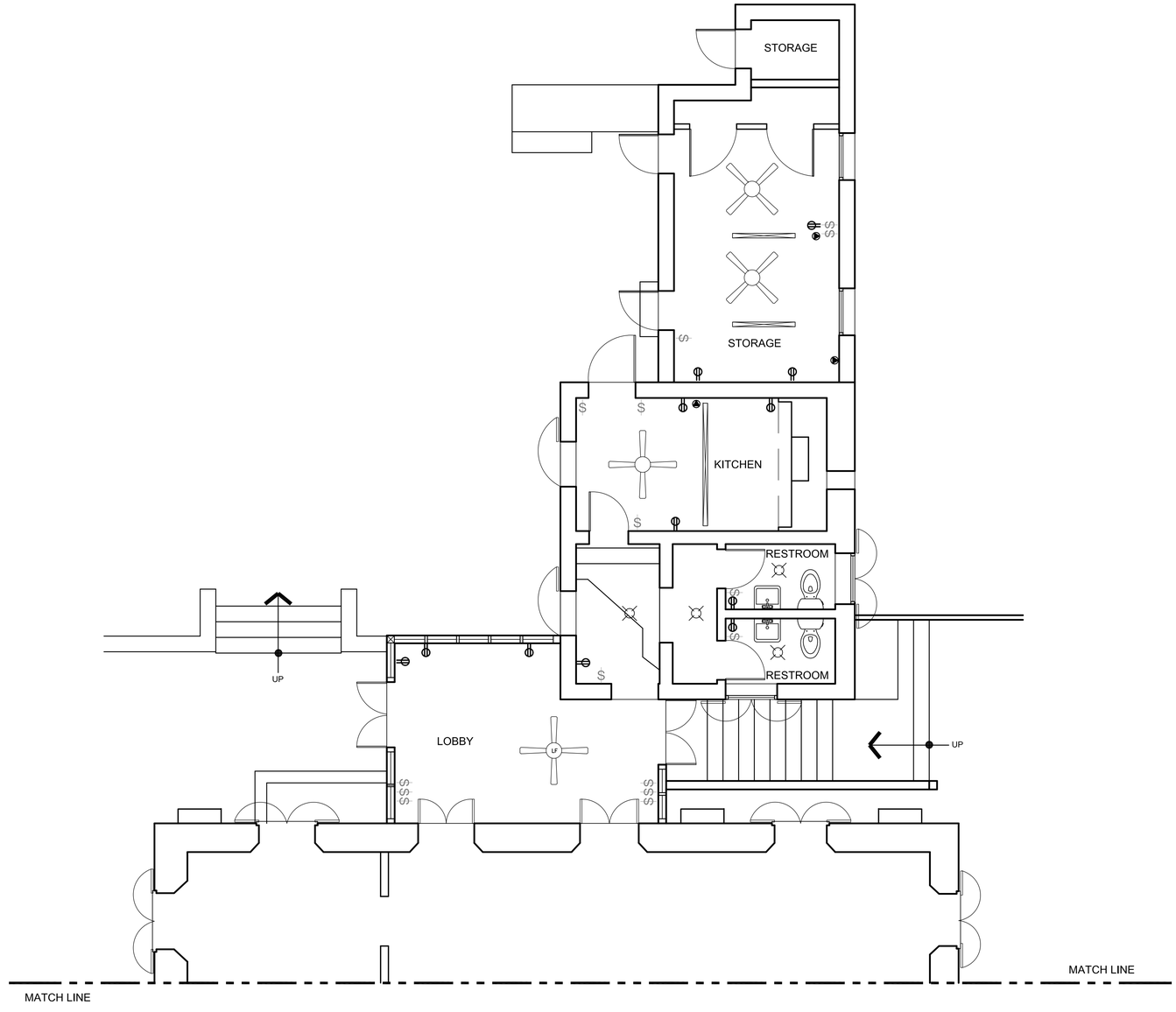

LEGEND

- ELECTRICAL RECEPTACLE
- DATA/PHONE PORT
- LIGHT SWITCH
- PANEL BOX
- CEILING MOUNTED LIGHT FIXTURE
- WALL MOUNTED LIGHT FIXTURE
- TRACK LIGHTS
- FLUORESCENT LIGHT FIXTURE
- COMBINATION CEILING FAN WITH LIGHT KIT
- CEILING FAN

N

PLAN

1	
2A1.0B	2A1.0B

SECOND FLOOR EXISTING FLOOR PLAN

SCALE: 1/4"=1'-0"

REVISIONS

NO:	DATE:	REMARKS

CONSULTANTS

Jaredian Design Group
Architects, Engineers, Construction Managers
No.33 Dronningens Gade - Queen's Quarter
Post Office Box 6218
St. Thomas, U.S. Virgin Islands 00804
telephone: 340.777.1600 fax: 340.777.1601
e-mail: jaredian2@vipowernet.net

THESE PLANS AND THE DESIGNS CONTAINED HEREIN ARE THE SOLE PROPERTY OF JAREDIAN DESIGN GROUP. THESE PLANS MAY NOT BE REPRODUCED WITHOUT THE WRITTEN PERMISSION OF JAREDIAN DESIGN GROUP. UNAUTHORIZED USE SHALL INVITE A CLAIM FOR COMPENSATION. THE USE BY ANY PERSON OR FIRM OF THESE PLANS OR ANY PART THEREOF SHALL NOT IN ANY WAY SUBJECT JAREDIAN DESIGN GROUP TO ANY COST OR DAMAGES FOR ANY ERROR OR OMISSION CONTAINED THEREIN.

PHASE II RENOVATION TO
PARCEL NO 19A & 20
KONGENS GADE
KINGS QUARTER
ST. THOMAS,
U.S.V.I. 00802-5858

DATE: 12-2-15
DRAWN BY: R.O.P
CHECKED BY: J.P.W.
APPROVED BY: J.P.W.

PROJECT NO: 13-002
CONTRACT NO:

SHEET NO:
2A1.0B
EXISTING
SECOND FLOOR PLAN

REGISTERED ARCHITECT
U.S. VIRGIN ISLANDS

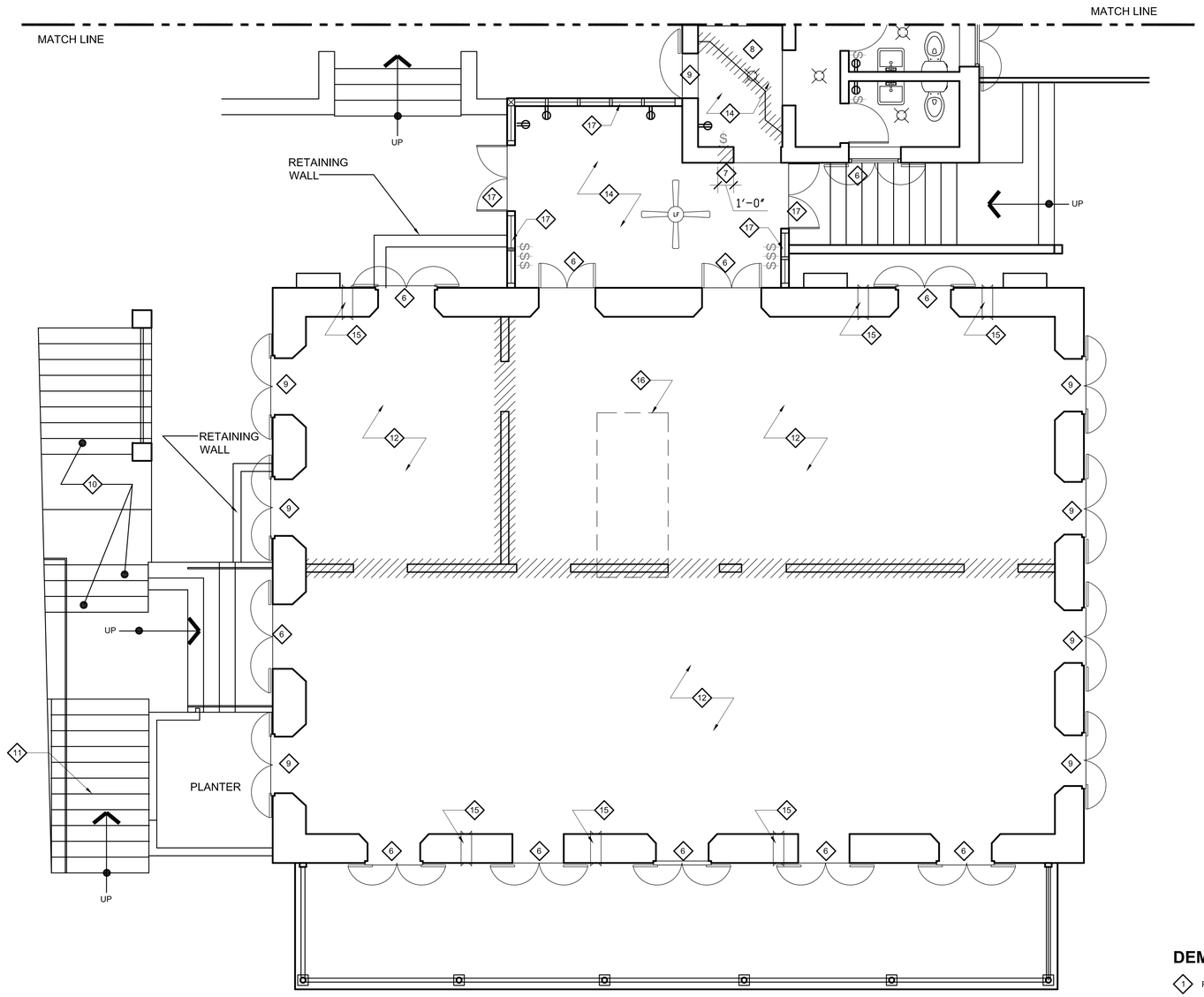

N

PLAN

1	
2A1.1A	2A1.1A

SECOND FLOOR DEMOLITION FLOOR PLAN

SCALE: 1/4"=1'-0"

GENERAL DEMOLITION NOTES

1. CONTRACTOR SHALL FIELD VERIFY ALL EXISTING CONDITIONS AND BE FAMILIAR WITH ALL SYSTEMS BEFORE DEMOLITION. ALL DEMOLITION SHALL COMPLY WITH THE RULES & REGULATIONS OF THE FEDERAL, STATE, COUNTRY AND CITY GOVERNMENTS. EXISTING SERVICES SHALL BE MAINTAINED DURING DEMOLITION. ANY SHUTDOWN OF SYSTEMS MUST BE COORDINATED & APPROVED BY THE OWNER. CONTRACTOR SHOULD COORDINATE WORK WITH ALL TRADES & PROVIDE SUPERVISION WHILE WORK IS BEING PERFORMED.
2. THE CONTRACTOR SHALL VERIFY WITH THE OWNER, ALL MATERIALS TO BE RETAINED BY THE OWNER & DELIVER & STORE SAME WHERE DIRECTED BY THE OWNER. ALL REMAINING ITEMS BECOME THE PROPERTY OF THE CONTRACTOR & SHALL BE DISPOSED OF IN A LEGAL MANNER.
3. DO NOT INTERFERE WITH USE OF ADJACENT AREAS. MAINTAIN FREE & SAFE PASSAGE TO & FROM ADJACENT AREAS. PROVIDE, ERECT & MAINTAIN BARRICADES & LIGHTING AS REQUIRED BY APPLICABLE REGULATORY ADVISORY TO PROTECT OCCUPANTS OF THE BUILDING & WORKERS.
4. REMOVE EXISTING ELEMENTS AS INDICATED BY LEGEND. SURFACES OF EXISTING AREAS WHICH HAVE BEEN ALTERED BY DEMOLITION NOT SPECIFICALLY CALLED FOR SHALL BE REPAIRED & FINISHED TO MATCH THE ADJACENT SURFACES. PROTECT ALL EXISTING OR REMAINING SURFACES, FLOORS, WALLS & CEILINGS FROM AREAS OF DEMOLITION & NEW CONSTRUCTION.
5. CONTRACTOR SHALL FIELD VERIFY THE EXISTING CONDITIONS & NOTIFY THE ARCHITECT OF DISSIMILARITIES BEFORE PROCEEDING WITH DEMOLITION WORK. ALL WORK SHALL BE COORDINATED WITH DRAWINGS FOR NEW CONSTRUCTION.
6. CONTRACTOR SHALL FIELD VERIFY ALL DIMENSIONS PRIOR TO DEMOLITION OR CONSTRUCTION IN EXISTING AREAS
7. ERECT & MAINTAIN DUSTPROOF PARTITIONS AS REQUIRED TO PREVENT THE SPREAD OF DUST, FUMES & SMOKE TO OTHER PARTS OF THE BUILDING. MAINTAIN EXIT REQUIREMENTS, COORDINATE EXACT LOCATION WITH OWNER. ON COMPLETION OF WORK, REMOVE TEMPORARY PARTITIONS & REPAIR DAMAGED SURFACES TO MATCH ADJACENT SURFACES.
8. ARRANGE & PAY FOR DISCONNECTING, REMOVING & CAPPING UTILITY SERVICES WITHIN AREAS OF DEMOLITION. DISCONNECT & STUB-OFF, NOTIFY THE AFFECTED UTILITY COMPANY & OBTAIN APPROVAL BEFORE STARTING THIS WORK.
9. REMOVE FROM THE SITE ALL CONTAMINATED, VERMIN INFESTED OR DANGEROUS MATERIALS ENCOUNTERED & DISPOSE OF BY LEGAL MEANS. DO NOT ENDANGER THE HEALTH OF WORKERS OF THE PUBLIC.
10. THE OWNER RESERVES THE RIGHT TO SALVAGE ANY MATERIAL OR PORTION THEREOF FROM DEMOLISHED MATERIAL BEFORE IT IS DISPOSED OF.
11. ALL PLUMBING (POTABLE, SANITARY, ETC.) REQUIRED FOR OTHER FLOORS ABOVE OR BELOW SHALL NOT BE DISRUPTED OR REMOVED. CONTRACTOR SHALL BE RESPONSIBLE TO VERIFY ALL SERVICES PRIOR TO REMOVAL OR DISCONNECTION OF ALL SERVICES (ELECTRICAL, HVAC, PLUMBING, SECURITY & TEL./DATA) FOR ADJOINING OCCUPIED SPACES SHALL BE MAINTAINED. CONTRACTOR TO MAKE MINOR ADJUSTMENTS AS REQUIRED TO MAINTAIN PLUMBING, ELECTRICAL & TEL./DATA TO OCCUPIED AREAS.
12. THE CONTRACTOR SHALL REMOVE & DISCARD ALL PLUMBING FIXTURES. THEY SHALL CAP ALL PIPES TEMPORALLY FOR RE-USE.
13. WHERE EXISTING WALLS ARE INDICATED TO BE REMOVED, PATCH INTERSECTING WALLS TO REMAIN FLUSH TO ACCEPT NEW FINISH.
14. CONTRACTOR SHALL REMOVE & DISCARD ALL DOORS, FRAMES, HARDWARE, ETC. UNLESS SPECIFICALLY NOTED OTHERWISE.
15. CONTRACTOR SHALL USE SELF LEVELING COMPOUND IN AREAS WHERE WALLS OR FLOOR TILES HAVE BEEN REMOVED OR ALTERED IN ORDER TO MAINTAIN A LEVEL SURFACE THROUGHOUT. THEY MUST ALSO USE IT IN AREAS WHERE A TRANSITION IS NEEDED BETWEEN SURFACES THAT ARE DIFFERENT IN MATERIAL OR HEIGHT.
16. EXISTING WOOD SHUTTER TO BE REMOVED AND REFURNISHED.
17. CONTRACTOR SHALL STRIP AND SAND EXISTING WOOD FLOORING FOR PREPARATION OF NEW FINISH . CONTRACTOR SHALL ALLOW FOR 200Ø OF REPLACEMENT.
18. EXISTING REDWOOD LOUVER POST AND DOOR ASSEMBLY TO BE REMOVED AND DISCARDED AND REPLACE WITH NEW IMPACT RESISTANT GLASS DOOR AND WINDOW ASSEMBLY IN EXTRUDED ALUMINUM FRAME.
19. THE CONTRACTOR SHALL SURVEY THE EXISTING EQUIPMENT & FURNISHINGS & DISCARD ALL EQUIPMENT & FURNISHINGS NOT DESIGNATED BY OWNER OR OWNER'S REPRESENTATIVE TO BE SALVAGED.
20. EXISTING BASEBOARD TO BE REMOVED AND DISCARDED.
21. EXISTING WOOD DECKING ON PORCH TO BE SANDED AND REPAINTED.
22. CONTRACTOR SHALL REMOVE ALL LOOSE PORTIONS OF EXISTING MASS MASONRY WALL. INSTALL A SCRATCH COAT OF LIME PLASTER PRIOR TO INSTALLATION OF THE FURRED WALL SYSTEM.
23. CONTRACTOR SHALL REMOVE AND DISCARD ALL OBSOLETE AND NONFUNCTIONAL CONDUITS,WIRE AND EQUIPMENT OF THE BUILDING.
24. REMOVE AND DISCARD EXISTING METAL ROOFING SYSTEM COMPLETE.

DEMOLITION NOTES LEGEND

1. REMOVE AND DISCARD EXISTING DOOR TRIM AND CASING.
2. REMOVE AND DISCARD EXISTING LIGHT FIXTURES AND CEILING FANS.
3. REMOVE AND DISCARD EXISTING WINDOW.
4. REMOVE AND DISCARD EXISTING TILES ON FLOOR AND WALLS.
5. REMOVE AND DISCARD EXISTING BATHROOM FIXTURES.
6. EXISTING WOOD SHUTTER TO BE REFURBISHED.
7. REMOVE PORTION OF EXISTING MASS MASONRY WALL AND FRAME, FINISH WITH BRICK AND STONE. PROVIDE NEW 3X12 HEADER AND FRAME TO MATCH EXISTING.CONTRACTOR SHALL RE-POINT FINISH EDGE WITH BRICK AND STONE TO INSURE A TRANSITION BETWEEN NEW AND EXISTING.
8. REMOVE PORTION OF EXISTING STAIRS AS REQUIRED TO ACCOMMODATE NEW STAIR CONFIGURATION.
9. REPLACE EXISTING SHUTTER.
10. LOCATION OF PORTION OF EXISTING BRICK STAIRS TO BE REMOVED AND RE-ALLIGNED. (SEE PLANS)
11. LOCATION OF EXISTING BRICK STEPS TO BE REMOVED, RE-POINTED AND RESET. PROVIDE ALLOWANCE FOR APPROXIMATELY 100 SQUARE FEET OF REPLACEMENT.
12. CONTRACTOR SHALL STRIP AND SAND EXISTING WOOD FLOOR IN PREPARATION OF NEW FINISH.ALLOW FOR APPROXIMATELY 200 SQUARE FEET OF REPLACEMENT.
13. PROTECT EXISTING QUARRY TILE FLOORING FROM DAMAGE.
14. REMOVE EXISTING QUARRY TILE FLOORING.
15. LOCATION OF EXISTING HOLE IN WALL LEFT BY AC DRAIN TO BE PATCH, REPAIRED AND IN-FILLED.
16. EXISTING SOLID WOOD PANEL TO BE REMOVED AND REPLACE WITH HARD WOOD FLOORING TO MATCH.
17. REMOVED AND DISCARD EXISTING REDWOOD LOUVER AND DOOR ASSEMBLY.

DEMOLITION SYMBOL LEGEND

EXISTING WALL TO BE DEMOLISHED

EXISTING WALL TO REMAIN

REVISIONS		
NO:	DATE:	REMARKS

CONSULTANTS

Jaredian Design Group
Architects, Engineers, Construction Managers
No.33 Dronningens Gade - Queen's Quarter
Post Office Box 6218
St. Thomas, U.S. Virgin Islands 00804
telephone: 340.777.1600 fax: 340.777.1601
e-mail: jaredian2@vipowernet.net

THESE PLANS AND THE DESIGNS CONTAINED HEREIN ARE THE SOLE PROPERTY OF JAREDIAN DESIGN GROUP. THESE PLANS MAY NOT BE REPRODUCED WITHOUT THE WRITTEN PERMISSION OF JAREDIAN DESIGN GROUP. UNAUTHORIZED USE SHALL INVITE A CLAIM FOR COMPENSATION. THE USE BY ANY PERSON OR FIRM OF THESE PLANS OR ANY PART THEREOF SHALL NOT IN ANY WAY SUBJECT JAREDIAN DESIGN GROUP TO ANY COST OR DAMAGES FOR ANY ERROR OR OMISSION CONTAINED THEREIN.

PHASE II RENOVATION TO
PARCEL NO 19A & 20
KONGENS GADE
KINGS QUARTER
ST. THOMAS,
U.S.V.I. 00802-5858

DATE: 12-2-15
DRAWN BY: R.O.P
CHECKED BY: J.P.W.
APPROVED BY: J.P.W.

PROJECT NO: 13-002
CONTRACT NO:

SHEET NO:
2A1.1A
SECOND FLOOR DEMOLITION PLAN

REGISTERED ARCHITECT
U.S. VIRGIN ISLANDS

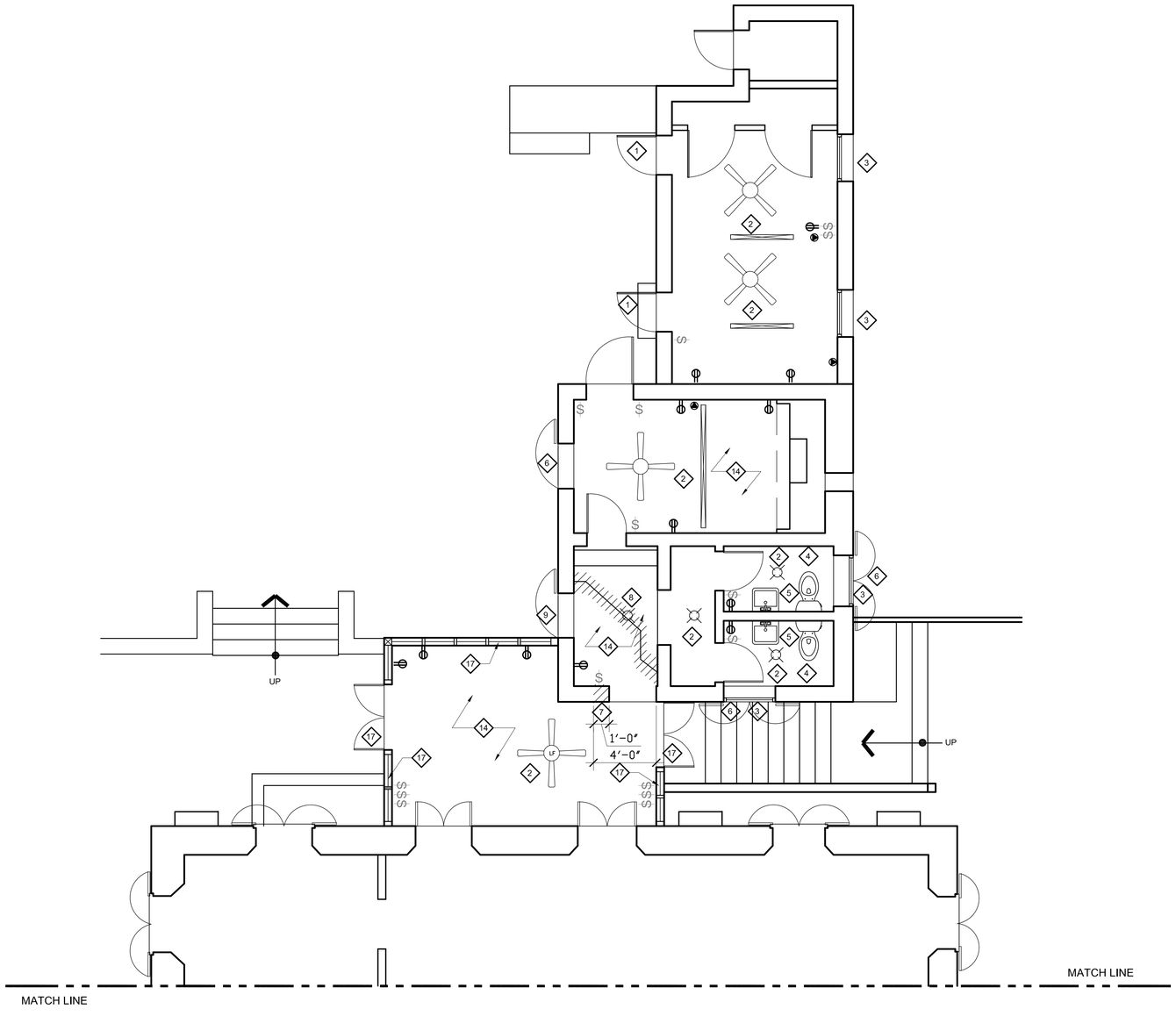

N

PLAN

1	
2A1.1B	2A1.1B

SECOND FLOOR DEMOLITION FLOOR PLAN

SCALE: 1/4"=1'-0"

DEMOLITION SYMBOL LEGEND

EXISTING WALL TO BE DEMOLISHED

EXISTING WALL TO REMAIN

GENERAL DEMOLITION NOTES

1. CONTRACTOR SHALL FIELD VERIFY ALL EXISTING CONDITIONS AND BE FAMILIAR WITH ALL SYSTEMS BEFORE DEMOLITION. ALL DEMOLITION SHALL COMPLY WITH THE RULES & REGULATIONS OF THE FEDERAL, STATE, COUNTRY AND CITY GOVERNMENTS. EXISTING SERVICES SHALL BE MAINTAINED DURING DEMOLITION. ANY SHUTDOWN OF SYSTEMS MUST BE COORDINATED & APPROVED BY THE OWNER. CONTRACTOR SHOULD COORDINATE WORK WITH ALL TRADES & PROVIDE SUPERVISION WHILE WORK IS BEING PERFORMED.
2. THE CONTRACTOR SHALL VERIFY WITH THE OWNER, ALL MATERIALS TO BE RETAINED BY THE OWNER & DELIVER & STORE SAME WHERE DIRECTED BY THE OWNER. ALL REMAINING ITEMS BECOME THE PROPERTY OF THE CONTRACTOR & SHALL BE DISPOSED OF IN A LEGAL MANNER.
3. DO NOT INTERFERE WITH USE OF ADJACENT AREAS. MAINTAIN FREE & SAFE PASSAGE TO & FROM ADJACENT AREAS. PROVIDE, ERECT & MAINTAIN BARRICADES & LIGHTING AS REQUIRED BY APPLICABLE REGULATORY ADVISORY TO PROTECT OCCUPANTS OF THE BUILDING & WORKERS.
4. REMOVE EXISTING ELEMENTS AS INDICATED BY LEGEND. SURFACES OF EXISTING AREAS WHICH HAVE BEEN ALTERED BY DEMOLITION NOT SPECIFICALLY CALLED FOR SHALL BE REPAIRED & FINISHED TO MATCH THE ADJACENT SURFACES. PROTECT ALL EXISTING OR REMAINING SURFACES, FLOORS, WALLS & CEILINGS FROM AREAS OF DEMOLITION & NEW CONSTRUCTION.
5. CONTRACTOR SHALL FIELD VERIFY THE EXISTING CONDITIONS & NOTIFY THE ARCHITECT OF DISSIMILARITIES BEFORE PROCEEDING WITH DEMOLITION WORK. ALL WORK SHALL BE COORDINATED WITH DRAWINGS FOR NEW CONSTRUCTION.
6. CONTRACTOR SHALL FIELD VERIFY ALL DIMENSIONS PRIOR TO DEMOLITION OR CONSTRUCTION IN EXISTING AREAS
7. ERECT & MAINTAIN DUSTPROOF PARTITIONS AS REQUIRED TO PREVENT THE SPREAD OF DUST, FUMES & SMOKE TO OTHER PARTS OF THE BUILDING. MAINTAIN EXIT REQUIREMENTS, COORDINATE EXACT LOCATION WITH OWNER. ON COMPLETION OF WORK, REMOVE TEMPORARY PARTITIONS & REPAIR DAMAGED SURFACES TO MATCH ADJACENT SURFACES.
8. ARRANGE & PAY FOR DISCONNECTING, REMOVING & CAPPING UTILITY SERVICES WITHIN AREAS OF DEMOLITION. DISCONNECT & STUB-OFF, NOTIFY THE AFFECTED UTILITY COMPANY & OBTAIN APPROVAL BEFORE STARTING THIS WORK.
9. REMOVE FROM THE SITE ALL CONTAMINATED, VERMIN INFESTED OR DANGEROUS MATERIALS ENCOUNTERED & DISPOSE OF BY LEGAL MEANS. DO NOT ENDANGER THE HEALTH OF WORKERS OF THE PUBLIC.
10. THE OWNER RESERVES THE RIGHT TO SALVAGE ANY MATERIAL OR PORTION THEREOF FROM DEMOLISHED MATERIAL BEFORE IT IS DISPOSED OF.
11. ALL PLUMBING (POTABLE, SANITARY, ETC.) REQUIRED FOR OTHER FLOORS ABOVE OR BELOW SHALL NOT BE DISRUPTED OR REMOVED. CONTRACTOR SHALL BE RESPONSIBLE TO VERIFY ALL SERVICES PRIOR TO REMOVAL OR DISCONNECTION OF ALL SERVICES (ELECTRICAL, HVAC, PLUMBING, SECURITY & TEL./DATA) FOR ADJOINING OCCUPIED SPACES SHALL BE MAINTAINED. CONTRACTOR TO MAKE MINOR ADJUSTMENTS AS REQUIRED TO MAINTAIN PLUMBING, ELECTRICAL & TEL./DATA TO OCCUPIED AREAS.
12. THE CONTRACTOR SHALL REMOVE & DISCARD ALL PLUMBING FIXTURES. THEY SHALL CAP ALL PIPES TEMPORALLY FOR RE-USE.
13. WHERE EXISTING WALLS ARE INDICATED TO BE REMOVED, PATCH INTERSECTING WALLS TO REMAIN FLUSH TO ACCEPT NEW FINISH.
14. CONTRACTOR SHALL REMOVE & DISCARD ALL DOORS, FRAMES, HARDWARE, ETC. UNLESS SPECIFICALLY NOTED OTHERWISE.
15. CONTRACTOR SHALL USE SELF LEVELING COMPOUND IN AREAS WHERE WALLS OR FLOOR TILES HAVE BEEN REMOVED OR ALTERED IN ORDER TO MAINTAIN A LEVEL SURFACE THROUGHOUT. THEY MUST ALSO USE IT IN AREAS WHERE A TRANSITION IS NEEDED BETWEEN SURFACES THAT ARE DIFFERENT IN MATERIAL OR HEIGHT.
16. EXISTING WOOD SHUTTER TO BE REMOVED AND REFURNISHED.
17. CONTRACTOR SHALL STRIP AND SAND EXISTING WOOD FLOORING FOR PREPARATION OF NEW FINISH . CONTRACTOR SHALL ALLOW FOR 200Ø OF REPLACEMENT.
18. EXISTING REDWOOD LOUVER POST AND DOOR ASSEMBLY TO BE REMOVED AND DISCARDED AND REPLACE WITH NEW IMPACT RESISTANT GLASS DOOR AND WINDOW ASSEMBLY IN EXTRUDED ALUMINUM FRAME.
19. THE CONTRACTOR SHALL SURVEY THE EXISTING EQUIPMENT & FURNISHINGS & DISCARD ALL EQUIPMENT & FURNISHINGS NOT DESIGNATED BY OWNER OR OWNER'S REPRESENTATIVE TO BE SALVAGED.
20. EXISTING BASEBOARD TO BE REMOVED AND DISCARDED.
21. EXISTING WOOD DECKING ON PORCH TO BE SANDED AND REPAINTED.
22. CONTRACTOR SHALL REMOVE ALL LOOSE PORTIONS OF EXISTING MASS MASONRY WALL. INSTALL A SCRATCH COAT OF LIME PLASTER PRIOR TO INSTALLATION OF THE FURRED WALL SYSTEM.
23. CONTRACTOR SHALL REMOVE AND DISCARD ALL OBSOLETE AND NONFUNCTIONAL CONDUITS,WIRE AND EQUIPMENT OF THE BUILDING.
24. REMOVE AND DISCARD EXISTING METAL ROOFING SYSTEM COMPLETE.

DEMOLITION NOTES LEGEND

1. REMOVE AND DISCARD EXISTING DOOR TRIM AND CASING.
2. REMOVE AND DISCARD EXISTING LIGHT FIXTURES AND CEILING FANS.
3. REMOVE AND DISCARD EXISTING WINDOW.
4. REMOVE AND DISCARD EXISTING TILES ON FLOOR AND WALLS.
5. REMOVE AND DISCARD EXISTING BATHROOM FIXTURES.
6. EXISTING WOOD SHUTTER TO BE REFURBISHED.
7. REMOVE PORTION OF EXISTING MASS MASONRY WALL AND FRAME, FINISH WITH BRICK AND STONE. PROVIDE NEW 3X12 HEADER AND FRAME TO MATCH EXISTING.CONTRACTOR SHALL RE-POINT FINISH EDGE WITH BRICK AND STONE TO INSURE A TRANSITION BETWEEN NEW AND EXISTING.
8. REMOVE PORTION OF EXISTING STAIRS AS REQUIRED TO ACCOMMODATE NEW STAIR CONFIGURATION.
9. REPLACE EXISTING SHUTTER.
10. LOCATION OF PORTION OF EXISTING BRICK STAIRS TO BE REMOVED AND RE-ALLIGNED. (SEE PLANS)
11. LOCATION OF EXISTING BRICK STEPS TO BE REMOVED, RE-POINTED AND RESET. PROVIDE ALLOWANCE FOR APPROXIMATELY 100 SQUARE FEET OF REPLACEMENT.
12. CONTRACTOR SHALL STRIP AND SAND EXISTING WOOD FLOOR IN PREPARATION OF NEW FINISH.ALLOW FOR APPROXIMATELY 200 SQUARE FEET OF REPLACEMENT.
13. PROTECT EXISTING QUARRY TILE FLOORING FROM DAMAGE.
14. REMOVE EXISTING QUARRY TILE FLOORING.
15. LOCATION OF EXISTING HOLE IN WALL LEFT BY AC DRAIN TO BE PATCH, REPAIRED AND IN-FILLED.
16. EXISTING SOLID WOOD PANEL TO BE REMOVED AND REPLACE WITH HARD WOOD FLOORING TO MATCH.
17. REMOVED AND DISCARD EXISTING REDWOOD LOUVER AND DOOR ASSEMBLY.

REVISIONS		
NO:	DATE:	REMARKS

CONSULTANTS

Jaredian Design Group
Architects, Engineers, Construction Managers
No.33 Dronningens Gade - Queen's Quarter
Post Office Box 6218
St. Thomas, U.S. Virgin Islands 00804
telephone: 340.777.1600 fax: 340.777.1601
e-mail: jaredian2@vipowernet.net

THESE PLANS AND THE DESIGNS CONTAINED HEREIN ARE THE SOLE PROPERTY OF JAREDIAN DESIGN GROUP. THESE PLANS MAY NOT BE REPRODUCED WITHOUT THE WRITTEN PERMISSION OF JAREDIAN DESIGN GROUP. UNAUTHORIZED USE SHALL INVITE A CLAIM FOR COMPENSATION. THE USE BY ANY PERSON OR FIRM OF THESE PLANS OR ANY PART THEREOF SHALL NOT IN ANY WAY SUBJECT JAREDIAN DESIGN GROUP TO ANY COST OR DAMAGES FOR ANY ERROR OR OMISSION CONTAINED THEREIN.

PHASE II RENOVATION TO
PARCEL NO 19A & 20
KONGENS GADE
KINGS QUARTER
ST. THOMAS,
U.S.V.I. 00802-5858

DATE: 12-2-15

DRAWN BY: R.O.P

CHECKED BY: J.P.W.

APPROVED BY: J.P.W.

PROJECT NO: 13-002

CONTRACT NO:

SHEET NO:

2A1.1B

SECOND FLOOR DEMOLITION PLAN

REGISTERED ARCHITECT
U.S. VIRGIN ISLANDS

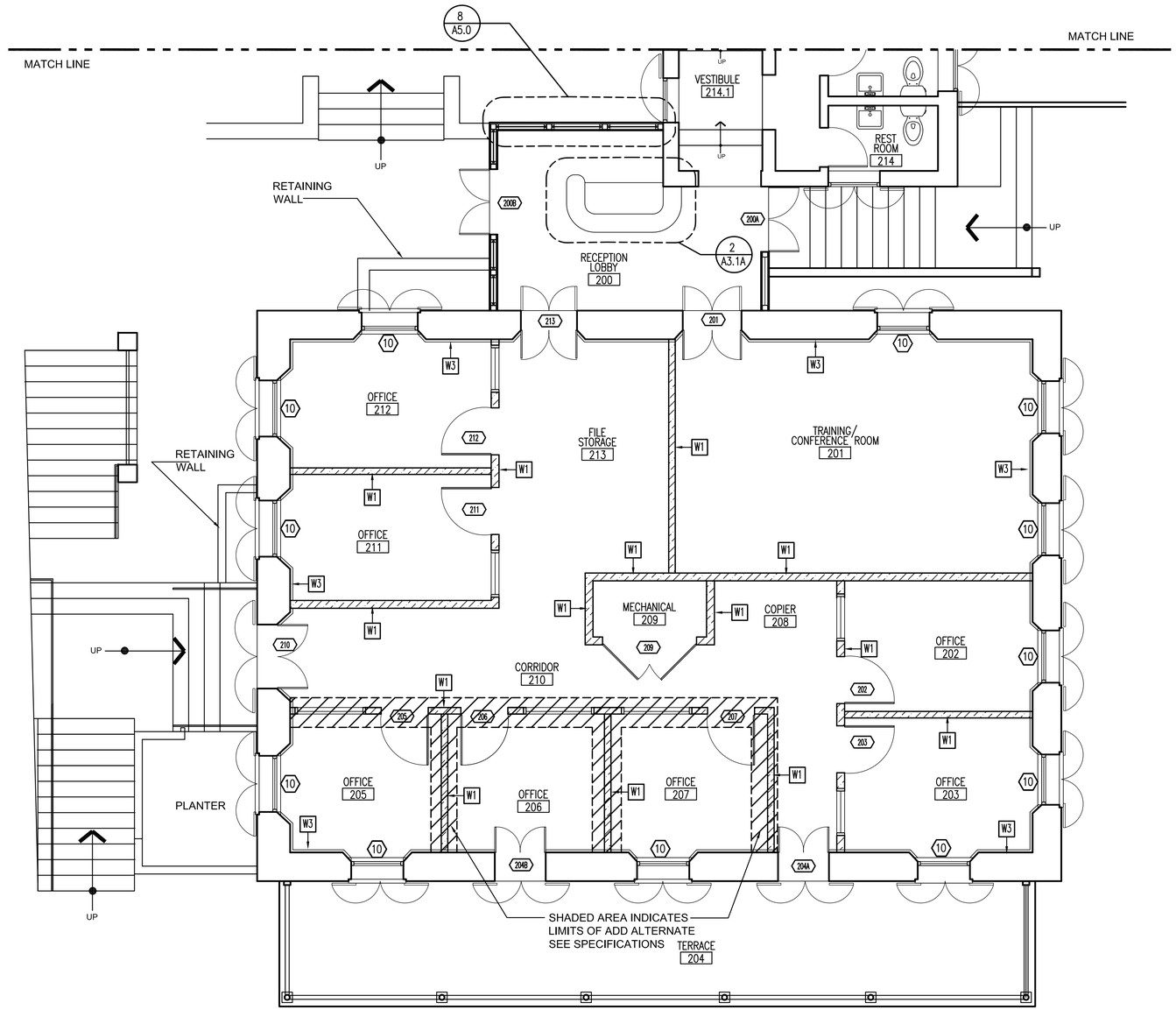

GENERAL NOTES

1. SEE SHEET A4.0 FOR DOOR, WINDOW AND ROOM FINISH SCHEDULES.
2. SEE SHEET A5.0 FOR WALL DETAILS
3. CENTER NEW WINDOW ASSEMBLY IN EXISTING OPENING

N

PLAN

1	
2A1.2A	2A1.2A

SECOND FLOOR IDENTIFICATION FLOOR PLAN

SCALE: 1/4"=1'-0"

REVISIONS		
NO:	DATE:	REMARKS

CONSULTANTS

Jaredian Design Group
Architects, Engineers, Construction Managers
No.33 Dronningens Gade - Queen's Quarter
Post Office Box 6218
St. Thomas, U.S. Virgin Islands 00804
telephone: 340.777.1600 fax: 340.777.1601
e-mail: jaredian2@vipowernet.net

THESE PLANS AND THE DESIGNS CONTAINED HEREIN ARE THE SOLE PROPERTY OF JAREDIAN DESIGN GROUP. THESE PLANS MAY NOT BE REPRODUCED WITHOUT THE WRITTEN PERMISSION OF JAREDIAN DESIGN GROUP. UNAUTHORIZED USE SHALL INVITE A CLAIM FOR COMPENSATION. THE USE BY ANY PERSON OR FIRM OF THESE PLANS OR ANY PART THEREOF SHALL NOT IN ANY WAY SUBJECT JAREDIAN DESIGN GROUP TO ANY COST OR DAMAGES FOR ANY ERROR OR OMISSION CONTAINED THEREIN.

PHASE II RENOVATION TO
PARCEL NO 19A & 20
KONGENS GADE
KINGS QUARTER
ST. THOMAS,
U.S.V.I. 00802-5858

DATE: 12-2-15
DRAWN BY: R.O.P
CHECKED BY: J.P.W.
APPROVED BY: J.P.W.

PROJECT NO: 13-002
CONTRACT NO:

SHEET NO:
2A1.2A
SECOND FLOOR IDENTIFICATION PLAN

REGISTERED ARCHITECT
U.S. VIRGIN ISLANDS

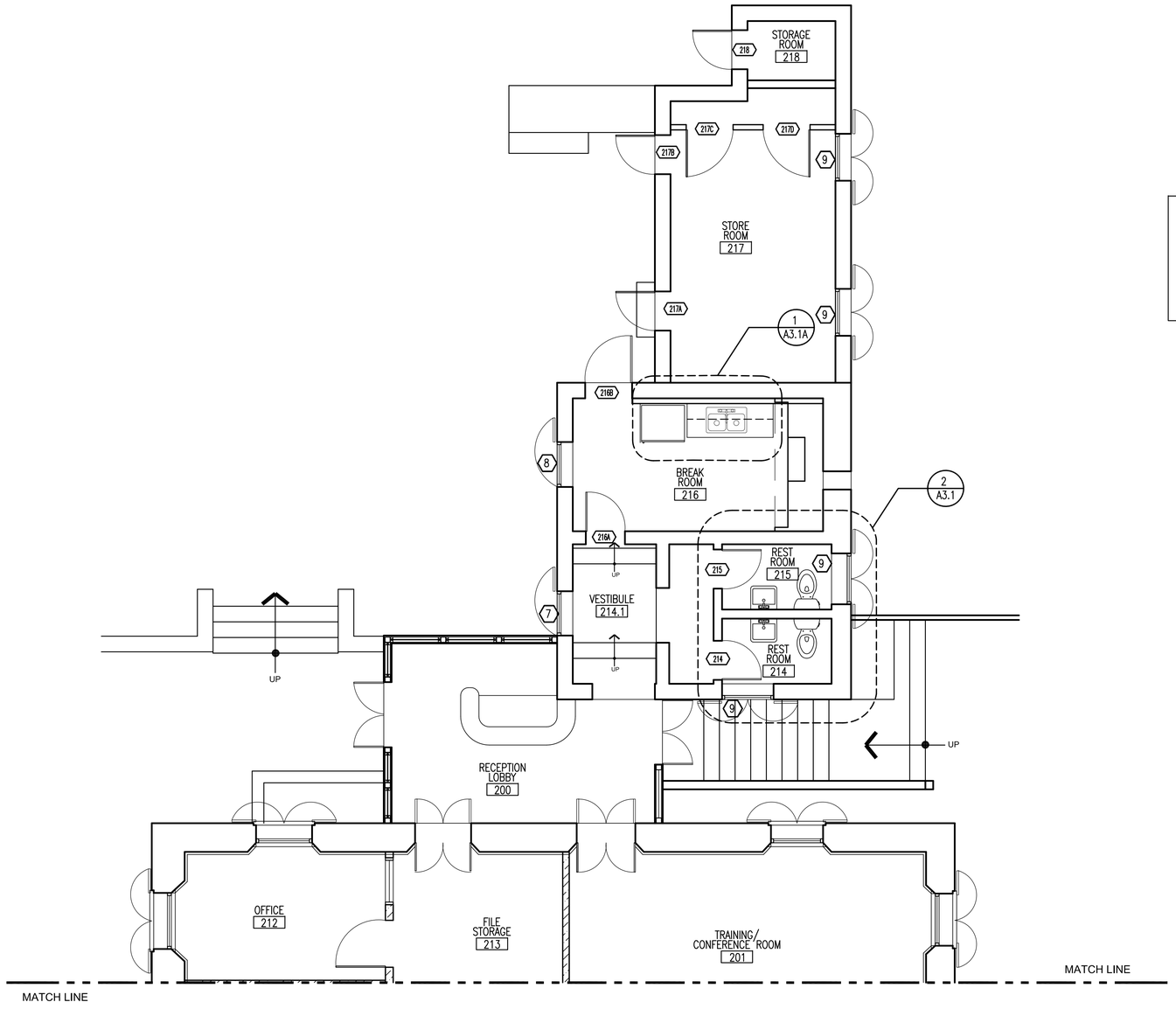

GENERAL NOTES

1. SEE SHEET A4.0 FOR DOOR, WINDOW AND ROOM FINISH SCHEDULES.
2. SEE SHEET A5.0 FOR WALL DETAILS
3. CENTER NEW WINDOW ASSEMBLY IN EXISTING OPENING

N

PLAN

1	
2A1.2B	2A1.2B

SECOND FLOOR IDENTIFICATION FLOOR PLAN

SCALE: 1/4"=1'-0"

REVISIONS		
NO:	DATE:	REMARKS

CONSULTANTS

Jaredian Design Group
Architects, Engineers, Construction Managers
No.33 Dronningens Gade - Queen's Quarter
Post Office Box 6218
St. Thomas, U.S. Virgin Islands 00804
telephone: 340.777.1600 fax: 340.777.1601
e-mail: jaredian2@vipowernet.net

THESE PLANS AND THE DESIGNS CONTAINED HEREIN ARE THE SOLE PROPERTY OF JAREDIAN DESIGN GROUP. THESE PLANS MAY NOT BE REPRODUCED WITHOUT THE WRITTEN PERMISSION OF JAREDIAN DESIGN GROUP. UNAUTHORIZED USE SHALL INVITE A CLAIM FOR COMPENSATION. THE USE BY ANY PERSON OR FIRM OF THESE PLANS OR ANY PART THEREOF SHALL NOT IN ANY WAY SUBJECT JAREDIAN DESIGN GROUP TO ANY COST OR DAMAGES FOR ANY ERROR OR OMISSION CONTAINED THEREIN.

PHASE II RENOVATION TO
PARCEL NO 19A & 20
KONGENS GADE
KINGS QUARTER
ST. THOMAS,
U.S.V.I. 00802-5858

DATE: 12-2-15
DRAWN BY: R.O.P
CHECKED BY: J.P.W.
APPROVED BY: J.P.W.

PROJECT NO: 13-002
CONTRACT NO:

SHEET NO:
2A1.2B
SECOND FLOOR IDENTIFICATION PLAN

REGISTERED ARCHITECT
U.S. VIRGIN ISLANDS

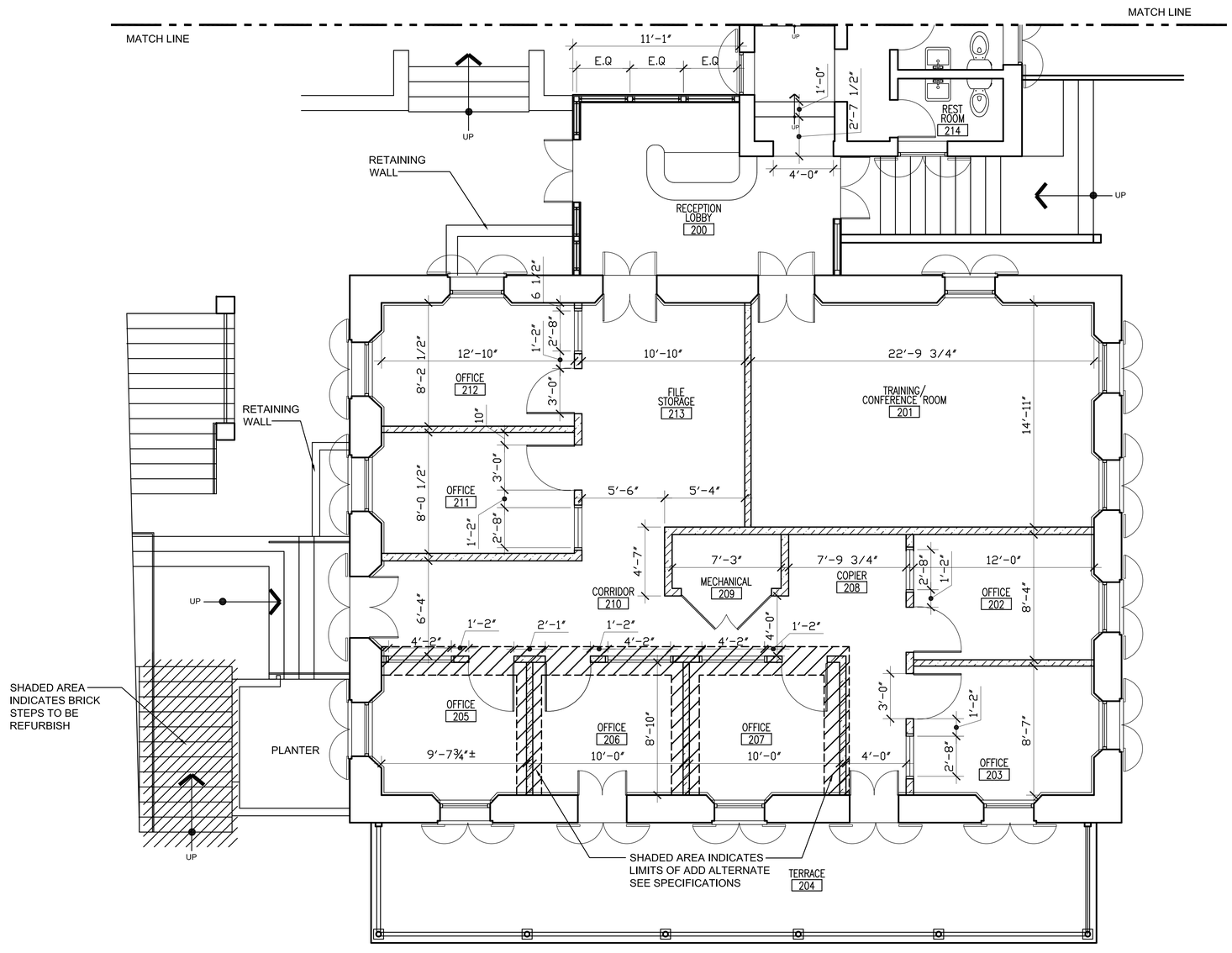

N

PLAN

1 SECOND FLOOR DIMENSION FLOOR PLAN

2A1.3A | 2A1.3A

SCALE: 1/4″=1′-0″

DIMENSION NOTES

1 DIMENSIONS INDICATED ON METAL STUD PARTITIONS ARE TO FACE OF FINISH MATERIAL. CONTRACTOR SHALL COORDINATE WITH WALL TYPES ON SHEET A5.0

2 OPPOSING WALLS WITH A DIMENSION STRING BETWEEN THEM ARE PARALLEL.

3 DIMENSION STRING LOCATIONS AT DOORS ARE SHOWN TO INSIDE EDGE DOOR. CONTRACTOR SHALL COORDINATE ROUGH OPENING REQUIREMENTS FOR DOOR INDICATED TO BE INSTALLED AT THAT LOCATION.

LEGEND

NEW STUD FRAMED WALL

EXISTING WALL TO REMAIN

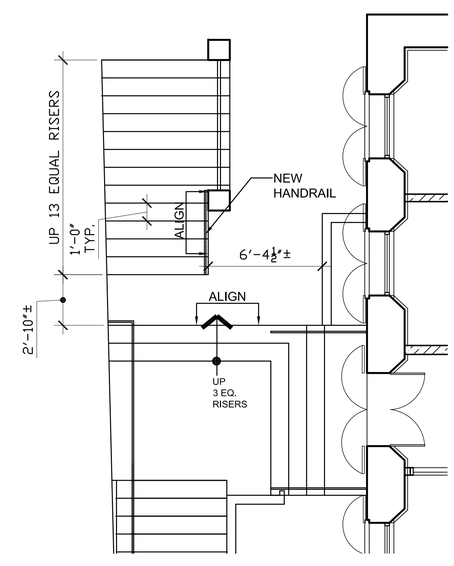

2 STAIR PLAN

2A1.3A | 2A1.3A

SCALE: 1/4″=1′-0″

REVISIONS		
NO:	DATE:	REMARKS

CONSULTANTS

Jaredian Design Group
Architects, Engineers, Construction Managers
No.33 Dronningens Gade - Queen's Quarter
Post Office Box 6218
St. Thomas, U.S. Virgin Islands 00804
telephone: 340.777.1600 fax: 340.777.1601
e-mail: jaredian2@vipowernet.net

THESE PLANS AND THE DESIGNS CONTAINED HEREIN ARE THE SOLE PROPERTY OF JAREDIAN DESIGN GROUP. THESE PLANS MAY NOT BE REPRODUCED WITHOUT THE WRITTEN PERMISSION OF JAREDIAN DESIGN GROUP. UNAUTHORIZED USE SHALL INVITE A CLAIM FOR COMPENSATION. THE USE BY ANY PERSON OR FIRM OF THESE PLANS OR ANY PART THEREOF SHALL NOT IN ANY WAY SUBJECT JAREDIAN DESIGN GROUP TO ANY COST OR DAMAGES FOR ANY ERROR OR OMISSION CONTAINED THEREIN.

PHASE II RENOVATION TO
PARCEL NO 19A & 20
KONGENS GADE
KINGS QUARTER
ST. THOMAS,
U.S.V.I. 00802-5858

DATE: 12-2-15

DRAWN BY: R.O.P

CHECKED BY: J.P.W.

APPROVED BY: J.P.W.

PROJECT NO: 13-002

CONTRACT NO:

SHEET NO:

2A1.3A

SECOND FLOOR DIMENSION PLAN

REGISTERED ARCHITECT U.S. VIRGIN ISLANDS

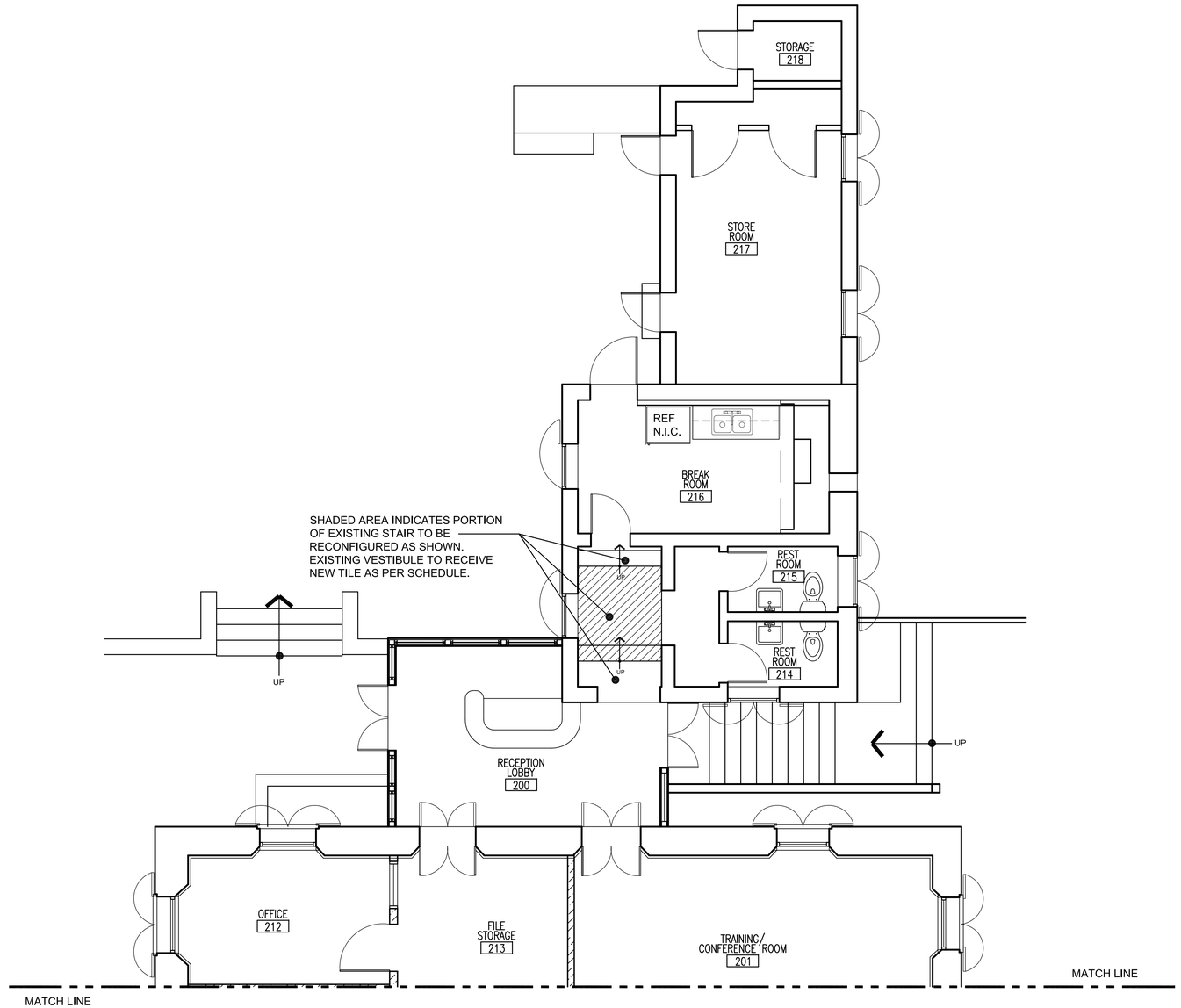

DIMENSION NOTES

1 DIMENSIONS INDICATED ON METAL STUD PARTITIONS ARE TO FACE OF FINISH MATERIAL. CONTRACTOR SHALL COORDINATE WITH WALL TYPES ON SHEET A5.0

2 OPPOSING WALLS WITH A DIMENSION STRING BETWEEN THEM ARE PARALLEL.

3 DIMENSION STRING LOCATIONS AT DOORS ARE SHOWN TO INSIDE EDGE DOOR. CONTRACTOR SHALL COOR-DINATE ROUGH OPENING REQUIREMENTS FOR DOOR INDICATED TO BE INSTALLED AT THAT LOCATION.

LEGEND

NEW STUD FRAMED WALL

EXISTING WALL TO REMAIN

N

PLAN

1	
2A1.3B	2A1.3B

SECOND FLOOR DIMENSION FLOOR PLAN

SCALE: 1/4"=1'-0"

REVISIONS		
NO:	DATE:	REMARKS

CONSULTANTS

Jaredian Design Group
Architects, Engineers, Construction Managers
No.33 Dronningens Gade - Queen's Quarter
Post Office Box 6218
St. Thomas, U.S. Virgin Islands 00804
telephone: 340.777.1600 fax: 340.777.1601
e-mail: jaredian2@vipowernet.net

THESE PLANS AND THE DESIGNS CONTAINED HEREIN ARE THE SOLE PROPERTY OF JAREDIAN DESIGN GROUP. THESE PLANS MAY NOT BE REPRODUCED WITHOUT THE WRITTEN PERMISSION OF JAREDIAN DESIGN GROUP. UNAUTHORIZED USE SHALL INVITE A CLAIM FOR COMPENSATION. THE USE BY ANY PERSON OR FIRM OF THESE PLANS OR ANY PART THEREOF SHALL NOT IN ANY WAY SUBJECT JAREDIAN DESIGN GROUP TO ANY COST OR DAMAGES FOR ANY ERROR OR OMISSION CONTAINED THEREIN.

PHASE II RENOVATION TO
PARCEL NO 19A & 20
KONGENS GADE
KINGS QUARTER
ST. THOMAS,
U.S.V.I. 00802-5858

DATE: 12-2-15
DRAWN BY: R.O.P
CHECKED BY: J.P.W.
APPROVED BY: J.P.W.

PROJECT NO: 13-002
CONTRACT NO:

SHEET NO:
2A1.3B
SECOND FLOOR DIMENSION PLAN

REGISTERED ARCHITECT U.S. VIRGIN ISLANDS

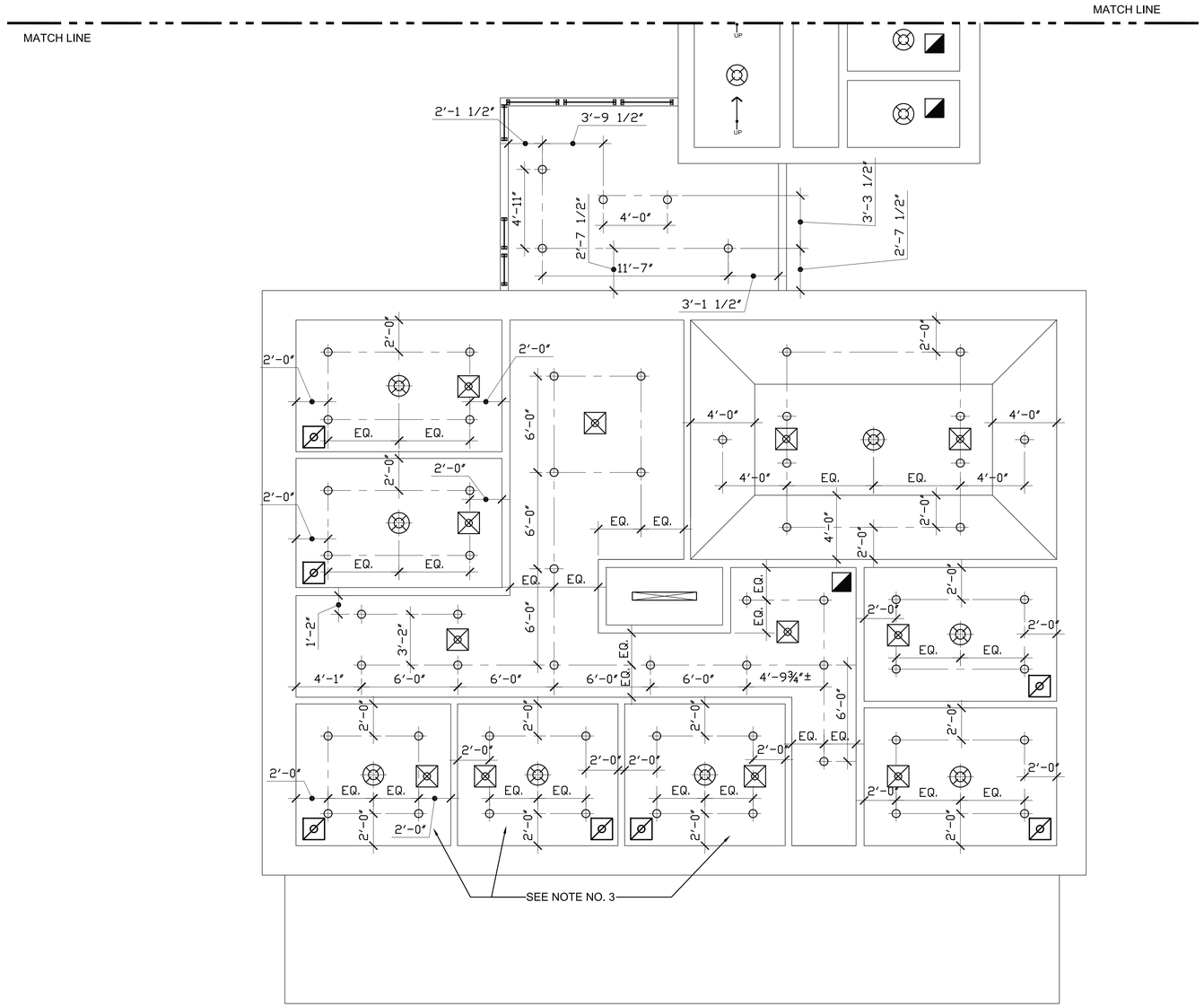

CEILING PENETRATION LEGEND

- CEILING GRILLE, REGISTER FOR RETURN OR EXHAUST AIR
- EXHAUST FAN
- CEILING SUPPLY DIFFUSER RECTANGULAR OR SQUARE
- RECESSED, SURFACE, OR PENDANT MOUNTED FLUORESCENT FIXTURE SEE FIXTURE SCHEDULE
- RECESSED, SURFACE, OR PENDANT MOUNTED DOWNLIGHT
- CEILING MOUNTED EXIT LIGHT WITH DIRECTIONAL ARROWS
- CEILING MOUNTED LIGHT FIXTURES
- FLUORESCENT LIGHT FIXTURES
- E.S. EXPOSED STRUCTURE
- G.W.B GYPSUM WALL BOARD SEE SHEET A2.1 FOR CEILING DETAILS
- C.W.B CEMENT WALL BOARD

GENERAL NOTES

1. CONTRACTOR SHALL CENTER LIGHT FIXTURE IN ROOMS UNLESS NOTED OTHERWISE.
2. CONTRACTOR SHALL REFER TO ELECTRICAL DRAWINGS FOR LIGHTING FIXTURE SCHEDULES.
3. LIGHTS, AC DIFFUSERS, AND SUSPENDED GYPSUM CEILING SHALL BE INCLUDED AS PART OF THE BASE BID IN ROOMS 205,206 AND 207.

N

PLAN

1	
2A1.4A	2A1.4A

SECOND FLOOR REFLECTED CEILING PLAN

SCALE: 1/4"=1'-0"

REVISIONS		
NO:	DATE:	REMARKS

CONSULTANTS

Jaredian Design Group
Architects, Engineers, Construction Managers
No.33 Dronningens Gade - Queen's Quarter
Post Office Box 6218
St. Thomas, U.S. Virgin Islands 00804
telephone: 340.777.1600 fax: 340.777.1601
e-mail: jaredian2@vipowernet.net

THESE PLANS AND THE DESIGNS CONTAINED HEREIN ARE THE SOLE PROPERTY OF JAREDIAN DESIGN GROUP. THESE PLANS MAY NOT BE REPRODUCED WITHOUT THE WRITTEN PERMISSION OF JAREDIAN DESIGN GROUP. UNAUTHORIZED USE SHALL INVITE A CLAIM FOR COMPENSATION. THE USE BY ANY PERSON OR FIRM OF THESE PLANS OR ANY PART THEREOF SHALL NOT IN ANY WAY SUBJECT JAREDIAN DESIGN GROUP TO ANY COST OR DAMAGES FOR ANY ERROR OR OMISSION CONTAINED THEREIN.

PHASE II RENOVATION TO
PARCEL NO 19A & 20
KONGENS GADE
KINGS QUARTER
ST. THOMAS,
U.S.V.I. 00802-5858

DATE: 12-2-15
DRAWN BY: R.O.P
CHECKED BY: J.P.W.
APPROVED BY: J.P.W.

PROJECT NO: 13-002
CONTRACT NO:

SHEET NO:
2A1.4A
SECOND FLOOR RELECTED CEILING

REGISTERED ARCHITECT U.S. VIRGIN ISLANDS

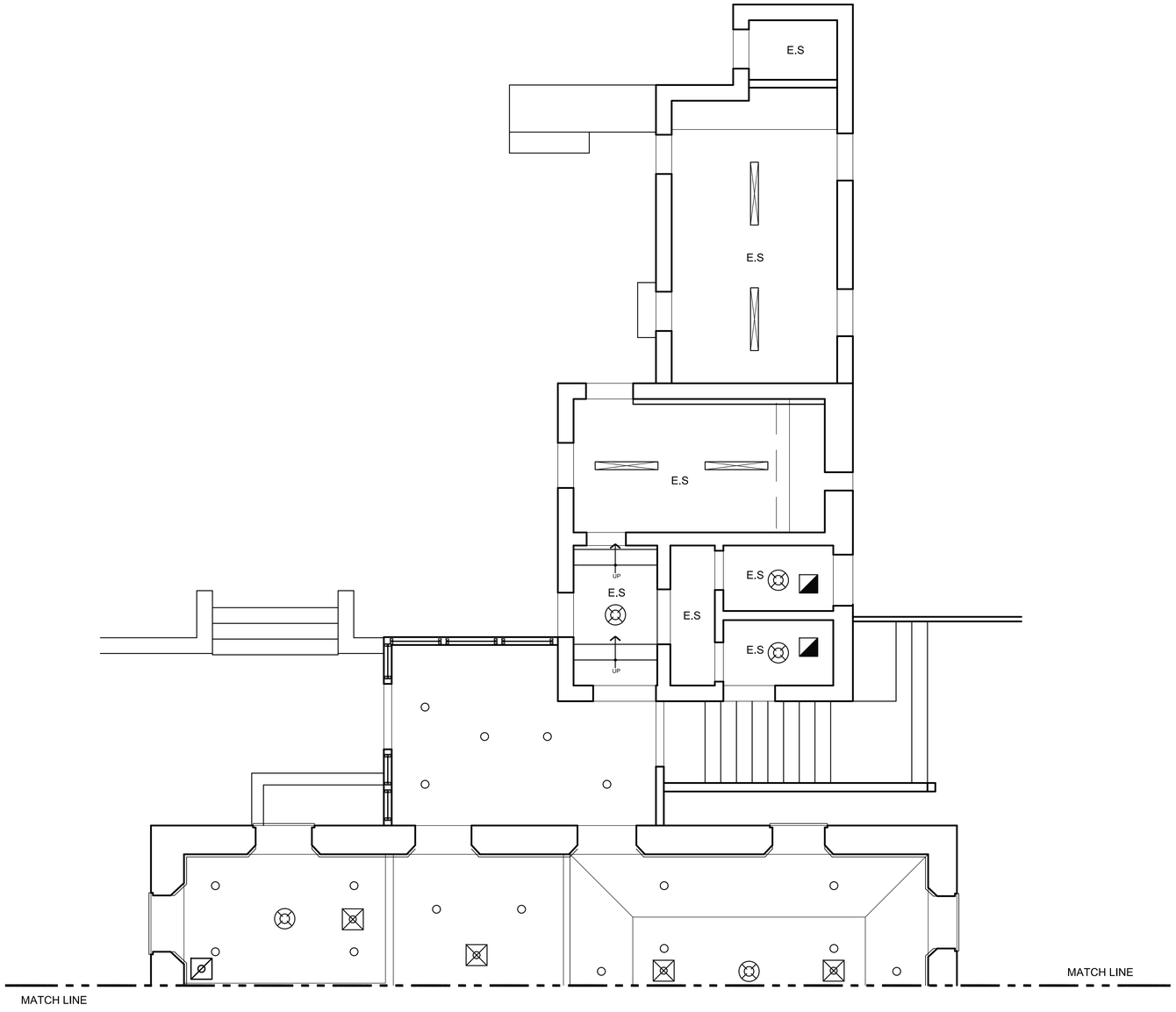

CEILING PENETRATION LEGEND

- CEILING GRILLE, REGISTER FOR RETURN OR EXHAUST AIR
- EXHAUST FAN
- CEILING SUPPLY DIFFUSER RECTANGULAR OR SQUARE
- RECESSED, SURFACE, OR PENDANT MOUNTED FLUORESCENT FIXTURE SEE FIXTURE SCHEDULE
- RECESSED, SURFACE, OR PENDANT MOUNTED DOWNLIGHT
- CEILING MOUNTED EXIT LIGHT WITH DIRECTIONAL ARROWS
- CEILING MOUNTED LIGHT FIXTURES
- FLUORESCENT LIGHT FIXTURES

E.S. EXPOSED STRUCTURE

G.W.B GYPSUM WALL BOARD SEE SHEET A2.1 FOR CEILING DETAILS

C.W.B CEMENT WALL BOARD

GENERAL NOTES

1. CONTRACTOR SHALL CENTER LIGHT FIXTURE IN ROOMS UNLESS NOTED OTHERWISE.
2. CONTRACTOR SHALL REFER TO ELECTRICAL DRAWINGS FOR LIGHTING FIXTURE SCHEDULES.

N

PLAN

1	
2A1.4B	2A1.4B

SECOND FLOOR REFLECTED CEILING PLAN

SCALE: 1/4"=1'-0"

REVISIONS

NO:	DATE:	REMARKS

CONSULTANTS

Jaredian Design Group
Architects, Engineers, Construction Managers
No.33 Dronningens Gade - Queen's Quarter
Post Office Box 6218
St. Thomas, U.S. Virgin Islands 00804
telephone: 340.777.1600 fax: 340.777.1601
e-mail: jaredian2@vipowernet.net

THESE PLANS AND THE DESIGNS CONTAINED HEREIN ARE THE SOLE PROPERTY OF JAREDIAN DESIGN GROUP. THESE PLANS MAY NOT BE REPRODUCED WITHOUT THE WRITTEN PERMISSION OF JAREDIAN DESIGN GROUP. UNAUTHORIZED USE SHALL INVITE A CLAIM FOR COMPENSATION. THE USE BY ANY PERSON OR FIRM OF THESE PLANS OR ANY PART THEREOF SHALL NOT IN ANY WAY SUBJECT JAREDIAN DESIGN GROUP TO ANY COST OR DAMAGES FOR ANY ERROR OR OMISSION CONTAINED THEREIN.

PHASE II RENOVATION TO
PARCEL NO 19A & 20
KONGENS GADE
KINGS QUARTER
ST. THOMAS,
U.S.V.I. 00802-5858

DATE: 12-2-15
DRAWN BY: R.O.P
CHECKED BY: J.P.W.
APPROVED BY: J.P.W.

PROJECT NO: 13-002
CONTRACT NO:

SHEET NO:
2A1.4B
SECOND FLOOR REFLECTED CEILING

REGISTERED ARCHITECT U.S. VIRGIN ISLANDS

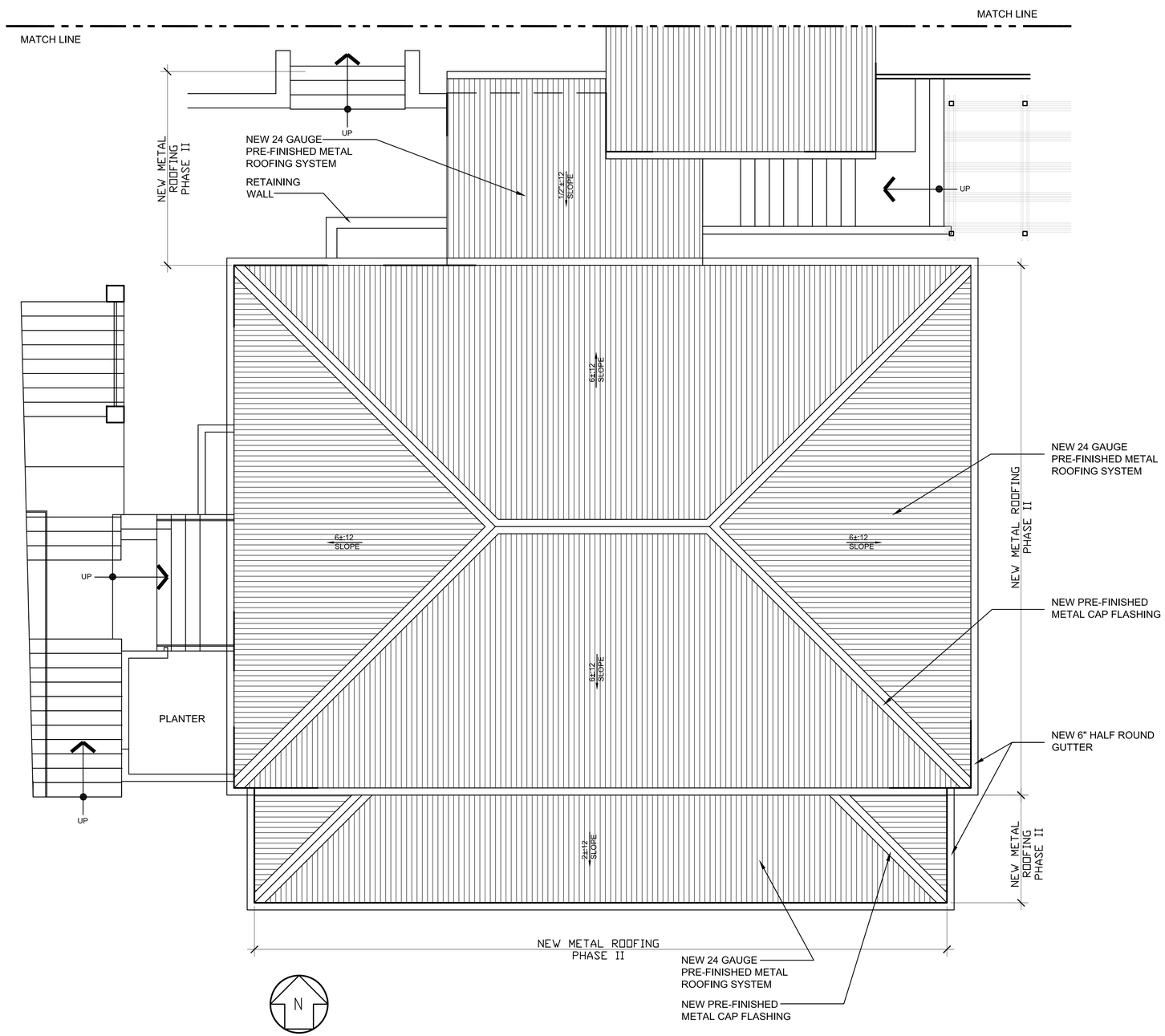

PLAN

1 | 3A1.0 | 3A1.0 **ARCHITECTURAL ROOF PLAN**

SCALE: 1/4"=1'-0"

ROOF NOTE

1. CONTRACTOR SHALL REMOVE AND DISCARD EXISTING C-PANEL METAL ROOFING SYSTEM COMPLETE WITH CAP FLASHING, PURLINS ETC.
2. CONTRACTOR SHALL INSTALL NEW 24 GAUGE C-PANEL ROOFING SYSTEM OVER NEW PRESSURE TREATED 2X4 PURLINS SPACED @ 24" O.C.
3. CONTRACTOR SHALL INSTALL 2X6 PURLINS @ ALL HIPS, RIDGES AND EAVES.
4. CONTRACTOR SHALL INSTALL 30LB FELT PAPER OVER DECKING.
5. CONTRACTOR SHALL INSTALL NEW 1½" RIGID INSULATION OVER EXISTING DECKING.
6. ALL LUMBER USED SHALL BE PRESSURE TREATED.
7. FB OF RAFTERS SHALL BE 1300 PSI MINIMUM.
8. ALL PURLINS TO RAFTERS SHALL HAVE #10 SCREWS 4' LONG.
9. ALL SIMPSON CONNECTORS SHALL HAVE MANUFACTURER'S APPROVED FASTENERS.
10. ALL ROOFING CONNECTORS SHALL BE 16 GAUGE MINIMUM AND HOT DIPPED GALVANIZED.
11. PROVIDE GALVANIZED DOWN SPOUT SUPPORT BRACKET TO WALL SPACED @ 3'-0" O.C. MAX.
12. PLUMBING VENTS SHALL BE EXTENDED 12" ABOVE THE ROOF AND SHALL BE FLASHED ACCORDING TO THE GALVANIZE METAL ROOF MANUFACTURER'S SPECIFICATION.
13. LAY FELT PARALLEL TO THE EAVES WITH A 2" END LAP NAILED SUFFICIENTLY TO HOLD IN PLACE LAP 2" HORIZONTAL AND 6" VERTICAL MINIMUM.
14. THE CONTRACTOR SHALL NOTIFY THE ARCHITECT OF ANY DISCREPANCIES OR ERRORS AND SHALL FIELD VERIFY ALL DIMENSIONS PRIOR TO THE CONSTRUCTION OF THE ROOF.
15. ALL METAL PANEL LAPS SHALL BE SECURED WITH DOUBLE BEAD LAP TAPE.

REVISIONS

NO:	DATE:	REMARKS

CONSULTANTS

Jaredian Design Group
Architects, Engineers, Construction Managers
No.33 Dronningens Gade - Queen's Quarter
Post Office Box 6218
St. Thomas, U.S. Virgin Islands 00804
telephone: 340.777.1600 fax: 340.777.1601
e-mail: jaredian2@vipowernet.net

THESE PLANS AND THE DESIGNS CONTAINED HEREIN ARE THE SOLE PROPERTY OF JAREDIAN DESIGN GROUP. THESE PLANS MAY NOT BE REPRODUCED WITHOUT THE WRITTEN PERMISSION OF JAREDIAN DESIGN GROUP. UNAUTHORIZED USE SHALL INVITE A CLAIM FOR COMPENSATION. THE USE BY ANY PERSON OR FIRM OF THESE PLANS OR ANY PART THEREOF SHALL NOT IN ANY WAY SUBJECT JAREDIAN DESIGN GROUP TO ANY COST OR DAMAGES FOR ANY ERROR OR OMISSION CONTAINED THEREIN.

PHASE II RENOVATION TO
PARCEL NO 19A & 20
KONGENS GADE
KINGS QUARTER
ST. THOMAS,
U.S.V.I. 00802-5858

DATE: 12-2-15
DRAWN BY: R.O.P
CHECKED BY: J.P.W.
APPROVED BY: J.P.W.

PROJECT NO: 13-002
CONTRACT NO:

SHEET NO:
3A1.0
ARCHITECTURAL ROOF PLAN

REGISTERED ARCHITECT U.S. VIRGIN ISLANDS

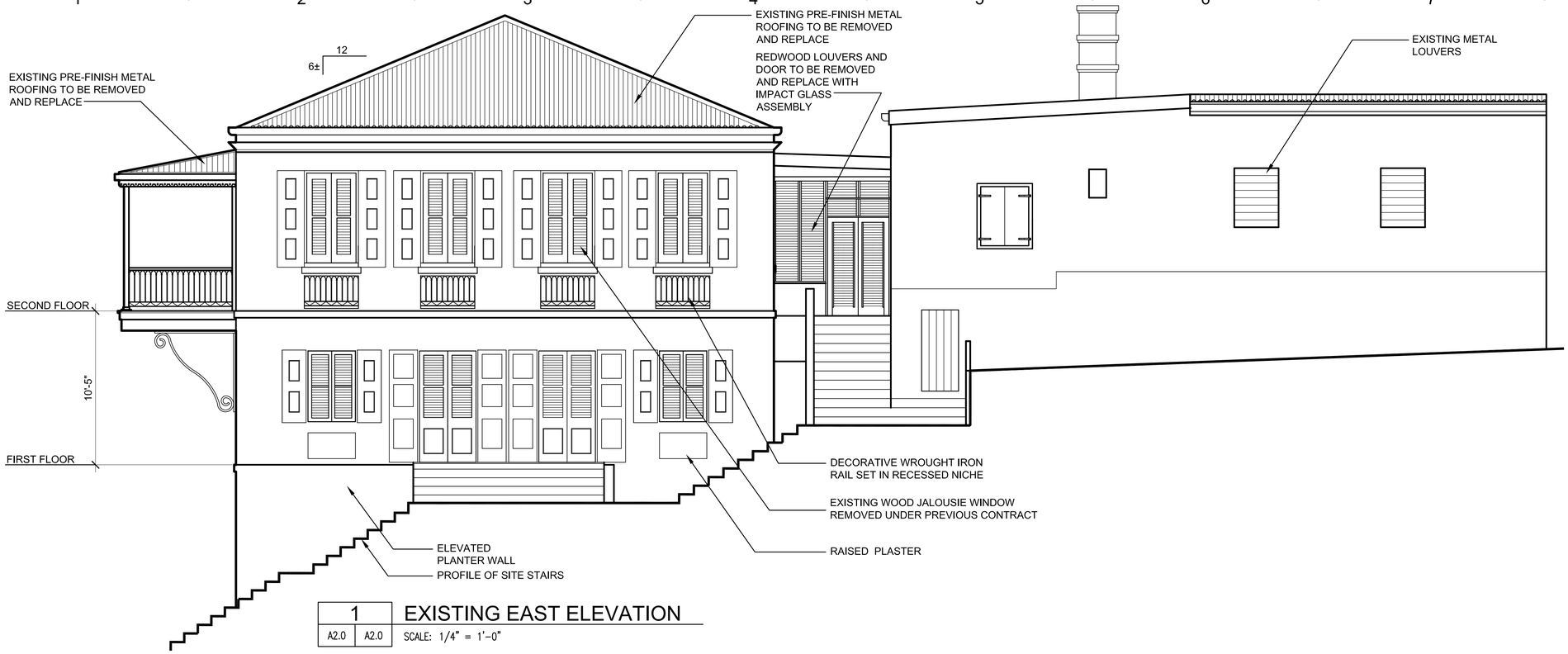

1 | A2.0 | A2.0 — EXISTING EAST ELEVATION

SCALE: 1/4" = 1'-0"

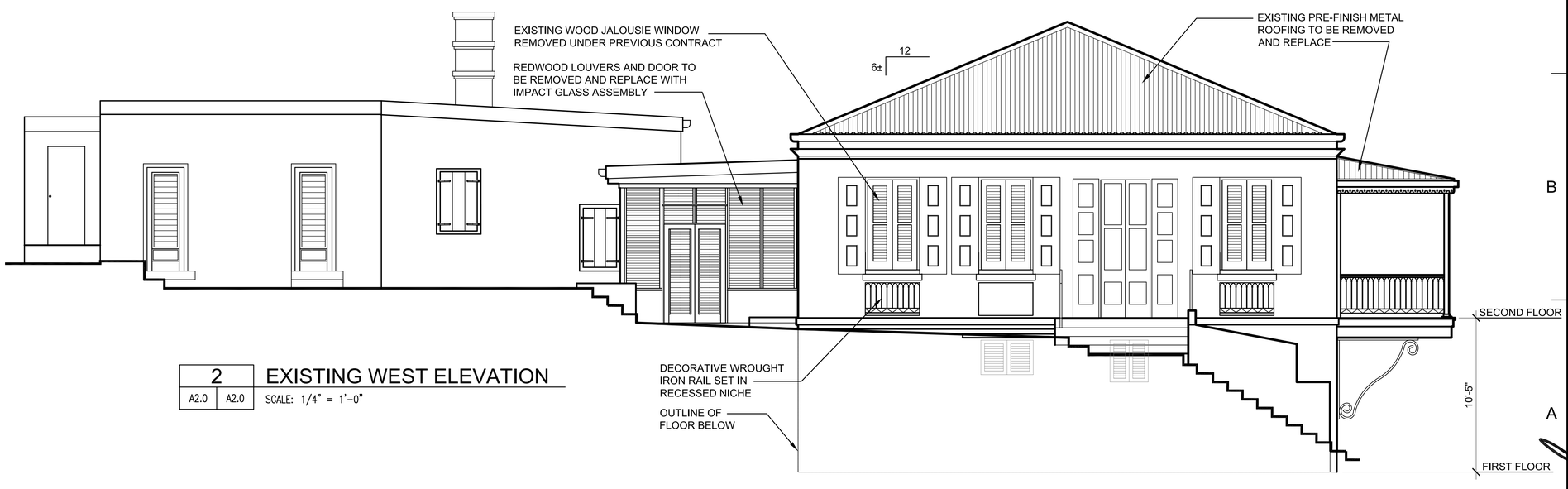

2 | A2.0 | A2.0 — EXISTING WEST ELEVATION

SCALE: 1/4" = 1'-0"

REVISIONS		
NO:	DATE:	REMARKS
1	8-14-14	REVISION NO.1

CONSULTANTS

Jaredian Design Group
Architects, Engineers, Construction Managers
No.33 Dronningens Gade - Queen's Quarter
Post Office Box 6218
St. Thomas, U.S. Virgin Islands 00804
telephone: 340.777.1600 fax: 340.777.1601
e-mail: jaredian2@vipowernet.net

THESE PLANS AND THE DESIGNS CONTAINED HEREIN ARE THE SOLE PROPERTY OF JAREDIAN DESIGN GROUP. THESE PLANS MAY NOT BE REPRODUCED WITHOUT THE WRITTEN PERMISSION OF JAREDIAN DESIGN GROUP. UNAUTHORIZED USE SHALL INVITE A CLAIM FOR COMPENSATION. THE USE BY ANY PERSON OR FIRM OF THESE PLANS OR ANY PART THEREOF SHALL NOT IN ANY WAY SUBJECT JAREDIAN DESIGN GROUP TO ANY COST OR DAMAGES FOR ANY ERROR OR OMISSION CONTAINED THEREIN.

PHASE II RENOVATION TO
PARCEL NO 19A & 20
KONGENS GADE
KINGS QUARTER
ST. THOMAS,
U.S.V.I. 00802-5858

DATE: 12-2-15
DRAWN BY: R.O.P
CHECKED BY: J.P.W.
APPROVED BY: J.P.W.

PROJECT NO: 13-002
CONTRACT NO:

SHEET NO:
A2.0
EXISTING ELEVATIONS

REGISTERED ARCHITECT
U.S. VIRGIN ISLANDS

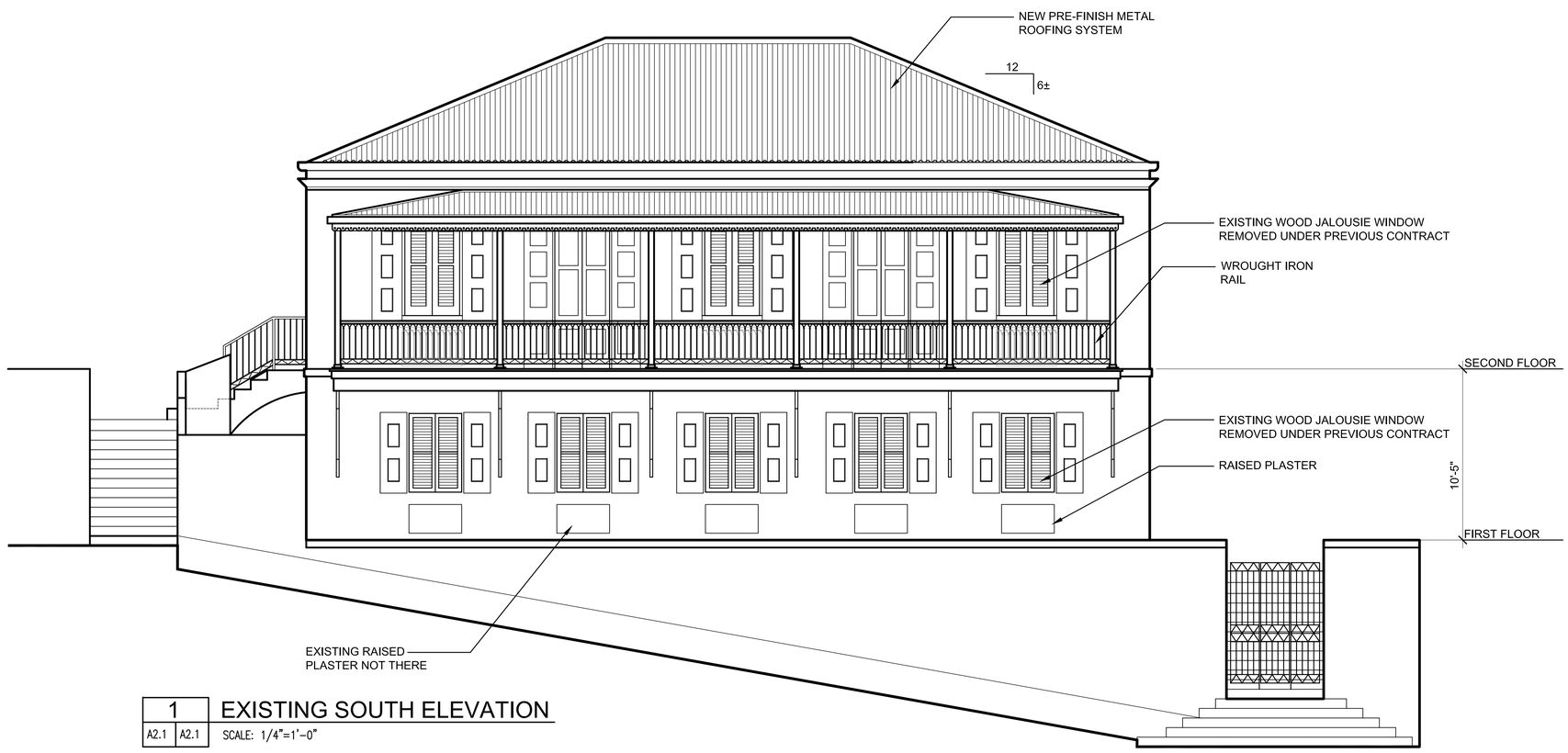

1	EXISTING SOUTH ELEVATION
A2.1 A2.1	SCALE: 1/4"=1'-0"

REVISIONS		
NO:	DATE:	REMARKS
1	8-14-14	REVISION NO.1

CONSULTANTS

Jaredian Design Group
Architects, Engineers, Construction Managers
No.33 Dronningens Gade - Queen's Quarter
Post Office Box 6218
St. Thomas, U.S. Virgin Islands 00804
telephone: 340.777.1600 fax: 340.777.1601
e-mail: jaredian2@vipowernet.net

THESE PLANS AND THE DESIGNS CONTAINED HEREIN ARE THE SOLE PROPERTY OF JAREDIAN DESIGN GROUP. THESE PLANS MAY NOT BE REPRODUCED WITHOUT THE WRITTEN PERMISSION OF JAREDIAN DESIGN GROUP. UNAUTHORIZED USE SHALL INVITE A CLAIM FOR COMPENSATION. THE USE BY ANY PERSON OR FIRM OF THESE PLANS OR ANY PART THEREOF SHALL NOT IN ANY WAY SUBJECT JAREDIAN DESIGN GROUP TO ANY COST OR DAMAGES FOR ANY ERROR OR OMISSION CONTAINED THEREIN.

PHASE II RENOVATION TO
PARCEL NO 19A & 20
KONGENS GADE
KINGS QUARTER
ST. THOMAS,
U.S.V.I. 00802-5858

DATE: 12-2-15
DRAWN BY: R.O.P
CHECKED BY: J.P.W.
APPROVED BY: J.P.W.

PROJECT NO: 13-002
CONTRACT NO:

SHEET NO:
A2.1
EXISTING ELEVATIONS

REGISTERED ARCHITECT
U.S. VIRGIN ISLANDS

1 NORTH ELEVATION

A2.2 | A2.2 SCALE: 1/4"=1'-0"

NOTE:

1. EXISTING WOOD JALOUSIE WINDOWS REMOVED UNDER PREVIOUS CONTRACT.

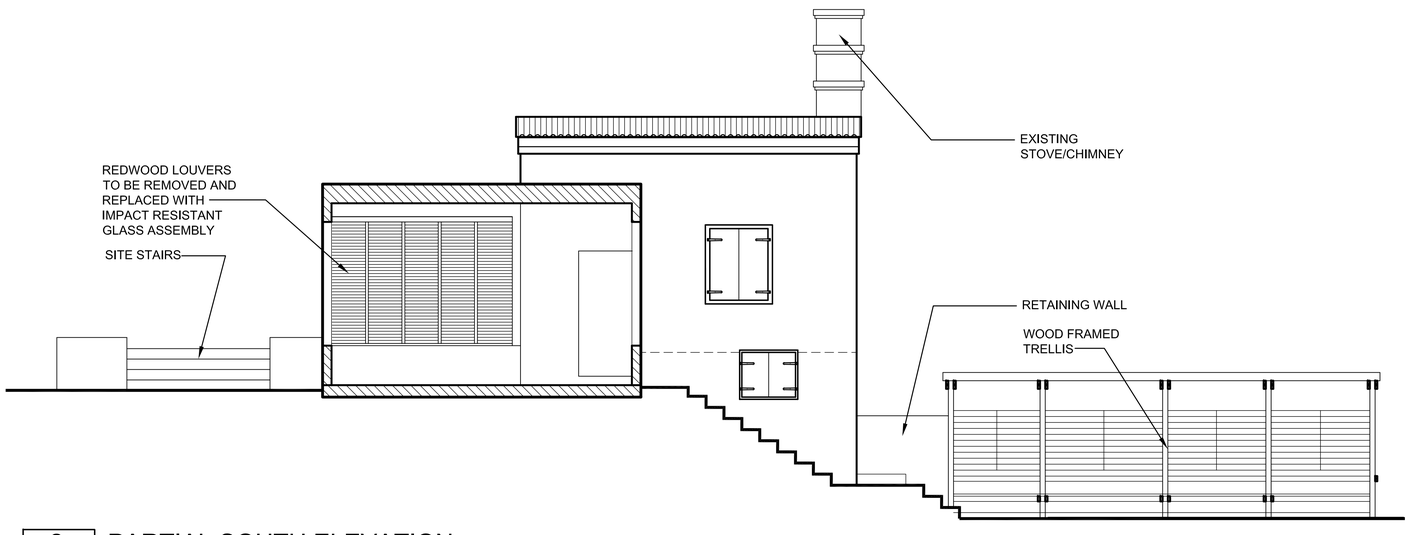

2 PARTIAL SOUTH ELEVATION

A2.2 | A2.2 SCALE: 1/4"=1'-0"

REVISIONS		
NO:	DATE:	REMARKS
1	8-14-14	REVISION NO.1

CONSULTANTS

Jaredian Design Group
Architects, Engineers, Construction Managers
No.33 Dronningens Gade - Queen's Quarter
Post Office Box 6218
St. Thomas, U.S. Virgin Islands 00804
telephone: 340.777.1600 fax: 340.777.1601
e-mail: jaredian2@vipowernet.net

THESE PLANS AND THE DESIGNS CONTAINED HEREIN ARE THE SOLE PROPERTY OF JAREDIAN DESIGN GROUP. THESE PLANS MAY NOT BE REPRODUCED WITHOUT THE WRITTEN PERMISSION OF JAREDIAN DESIGN GROUP. UNAUTHORIZED USE SHALL INVITE A CLAIM FOR COMPENSATION. THE USE BY ANY PERSON OR FIRM OF THESE PLANS OR ANY PART THEREOF SHALL NOT IN ANY WAY SUBJECT JAREDIAN DESIGN GROUP TO ANY COST OR DAMAGES FOR ANY ERROR OR OMISSION CONTAINED THEREIN.

PHASE II RENOVATION TO
PARCEL NO 19A & 20
KONGENS GADE
KINGS QUARTER
ST. THOMAS,
U.S.V.I. 00802-5858

DATE: 12-2-15
DRAWN BY: R.O.P
CHECKED BY: J.P.W.
APPROVED BY: J.P.W.

PROJECT NO: 13-002
CONTRACT NO:

SHEET NO:
A2.2
EXISTING ELEVATIONS

REGISTERED ARCHITECT
U.S. VIRGIN ISLANDS

1 | A2.3 | A2.3

PROPOSED NORTH ELEVATION

SCALE: 1/4"=1'-0"

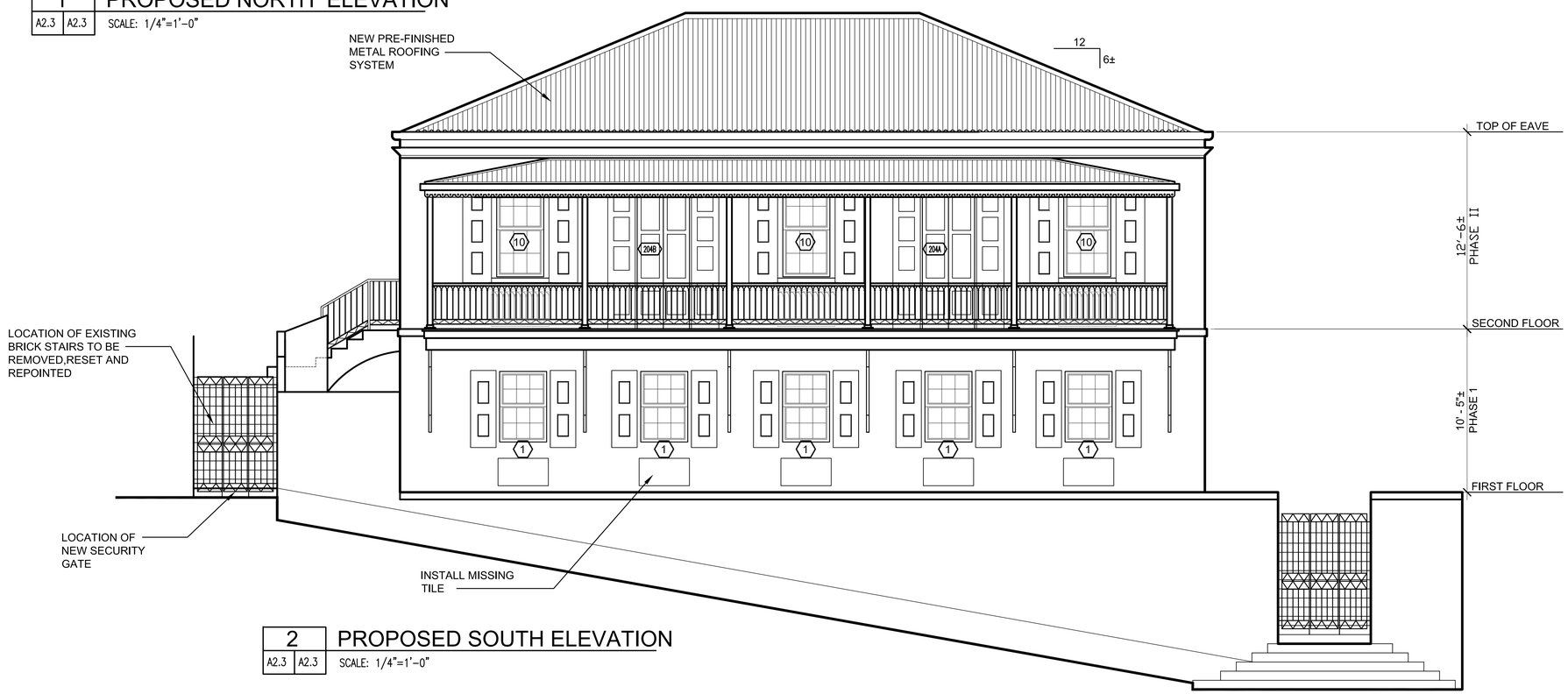

2 | A2.3 | A2.3

PROPOSED SOUTH ELEVATION

SCALE: 1/4"=1'-0"

NOTE:

1. THE ENTIRE WALLS, INCLUSIVE OF SHUTTERS, DOORS, RAILS, POST AND PILASTERS SHALL BE PAINTED AS PART OF THE PHASE II SCOPE.
2. FIRST FLOOR WINDOWS AND DOORS WHERE INSTALLED UNDER PHASE I CONSTRUCTION ARE NOT INCLUDED IN THE SCOPE OF WORK.
3. CONTRACTOR SHALL REMOVE AND DISCARD AS PART OF PHASE II WORK ALL OBSOLETE CONDUIT, WIRES, EQUIPMENT ETC.

REVISIONS

NO:	DATE:	REMARKS
1	8-14-14	REVISION NO.1

CONSULTANTS

Jaredian Design Group
Architects, Engineers, Construction Managers
No.33 Dronningens Gade - Queen's Quarter
Post Office Box 6218
St. Thomas, U.S. Virgin Islands 00804
telephone: 340.777.1600 fax: 340.777.1601
e-mail: jaredian2@vipowernet.net

THESE PLANS AND THE DESIGNS CONTAINED HEREIN ARE THE SOLE PROPERTY OF JAREDIAN DESIGN GROUP. THESE PLANS MAY NOT BE REPRODUCED WITHOUT THE WRITTEN PERMISSION OF JAREDIAN DESIGN GROUP. UNAUTHORIZED USE SHALL INVITE A CLAIM FOR COMPENSATION. THE USE BY ANY PERSON OR FIRM OF THESE PLANS OR ANY PART THEREOF SHALL NOT IN ANY WAY SUBJECT JAREDIAN DESIGN GROUP TO ANY COST OR DAMAGES FOR ANY ERROR OR OMISSION CONTAINED THEREIN.

PHASE II RENOVATION TO
PARCEL NO 19A & 20
KONGENS GADE
KINGS QUARTER
ST. THOMAS,
U.S.V.I. 00802-5858

DATE: 12-2-15
DRAWN BY: R.O.P
CHECKED BY: J.P.W.
APPROVED BY: J.P.W.

PROJECT NO: 13-002
CONTRACT NO:

SHEET NO: A2.3

PROPOSED ELEVATIONS

REGISTERED ARCHITECT U.S. VIRGIN ISLANDS

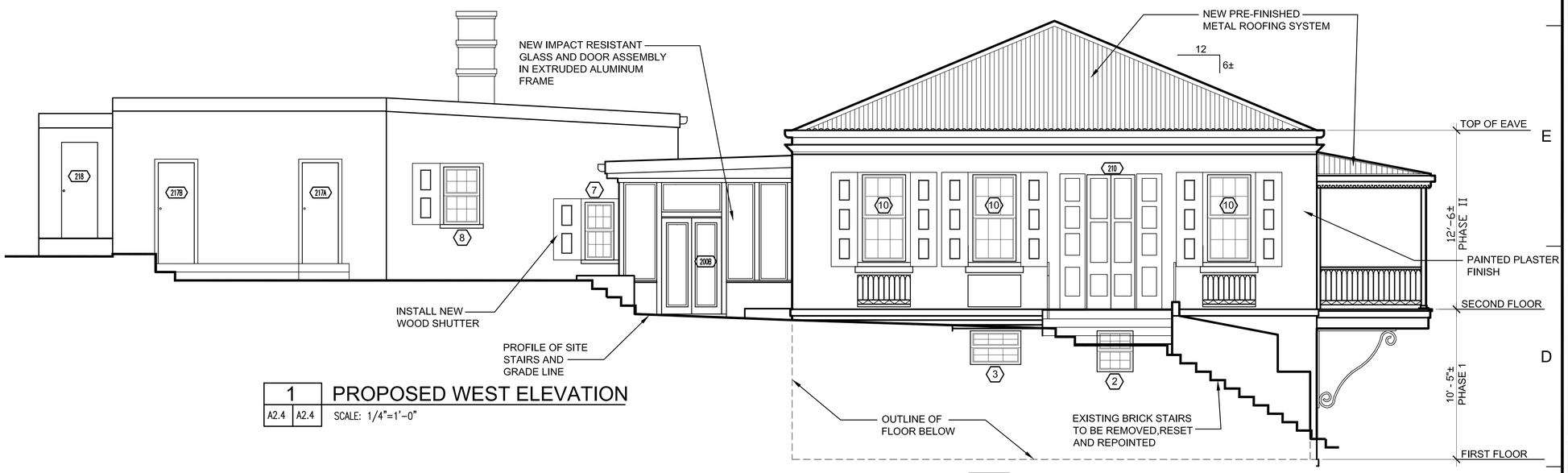

1 PROPOSED WEST ELEVATION

A2.4 A2.4 SCALE: 1/4"=1'-0"

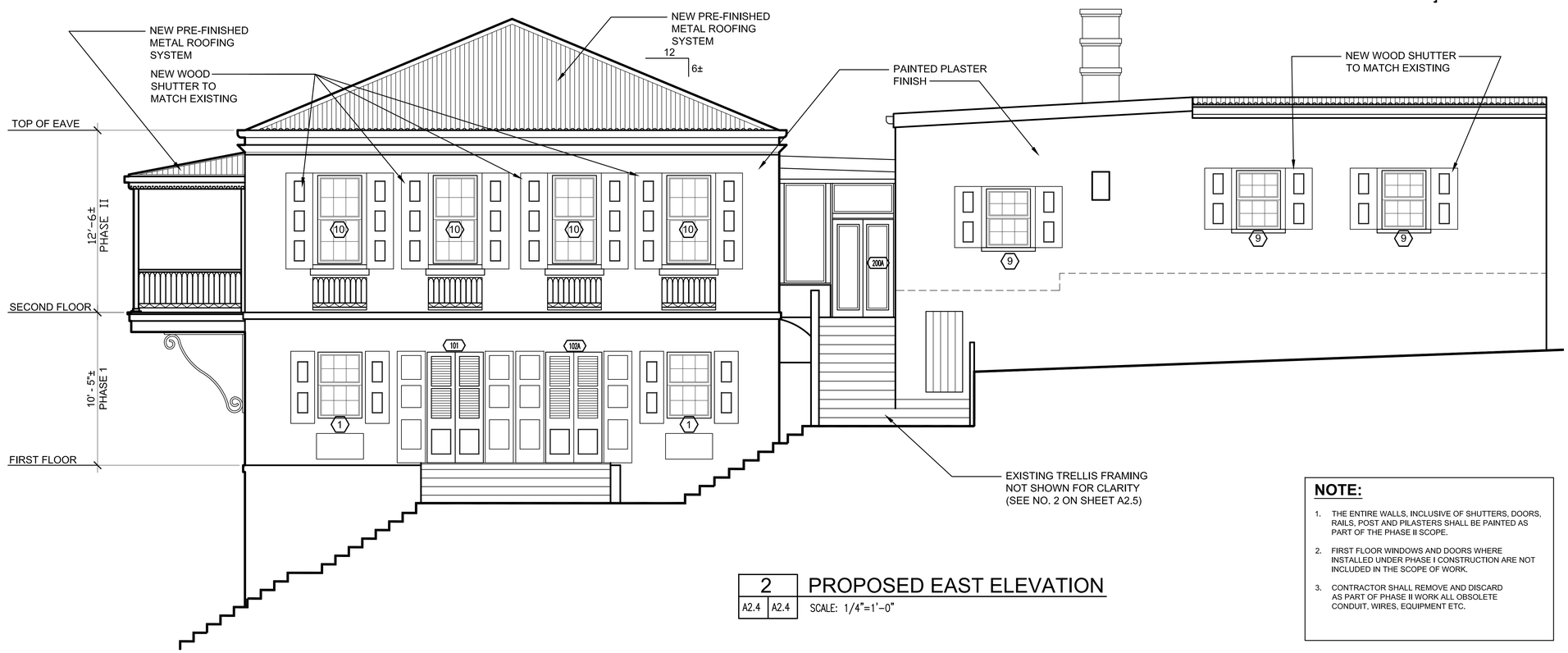

2 PROPOSED EAST ELEVATION

A2.4 A2.4 SCALE: 1/4"=1'-0"

NOTE:

1. THE ENTIRE WALLS, INCLUSIVE OF SHUTTERS, DOORS, RAILS, POST AND PILASTERS SHALL BE PAINTED AS PART OF THE PHASE II SCOPE.
2. FIRST FLOOR WINDOWS AND DOORS WHERE INSTALLED UNDER PHASE I CONSTRUCTION ARE NOT INCLUDED IN THE SCOPE OF WORK.
3. CONTRACTOR SHALL REMOVE AND DISCARD AS PART OF PHASE II WORK ALL OBSOLETE CONDUIT, WIRES, EQUIPMENT ETC.

REVISIONS

NO:	DATE:	REMARKS
1	8-14-14	REVISION NO.1

CONSULTANTS

Jaredian Design Group
Architects, Engineers, Construction Managers
No.33 Dronningens Gade - Queen's Quarter
Post Office Box 6218
St. Thomas, U.S. Virgin Islands 00804
telephone: 340.777.1600 fax: 340.777.1601
e-mail: jaredian2@vipowernet.net

THESE PLANS AND THE DESIGNS CONTAINED HEREIN ARE THE SOLE PROPERTY OF JAREDIAN DESIGN GROUP. THESE PLANS MAY NOT BE REPRODUCED WITHOUT THE WRITTEN PERMISSION OF JAREDIAN DESIGN GROUP. UNAUTHORIZED USE SHALL INVITE A CLAIM FOR COMPENSATION. THE USE BY ANY PERSON OR FIRM OF THESE PLANS OR ANY PART THEREOF SHALL NOT IN ANY WAY SUBJECT JAREDIAN DESIGN GROUP TO ANY COST OR DAMAGES FOR ANY ERROR OR OMISSION CONTAINED THEREIN.

PHASE II RENOVATION TO
PARCEL NO 19A & 20
KONGENS GADE
KINGS QUARTER
ST. THOMAS,
U.S.V.I. 00802-5858

DATE: 12-2-15
DRAWN BY: R.O.P
CHECKED BY: J.P.W.
APPROVED BY: J.P.W.

PROJECT NO: 13-002
CONTRACT NO:

SHEET NO:
A2.4
PROPOSED ELEVATIONS

REGISTERED ARCHITECT U.S. VIRGIN ISLANDS

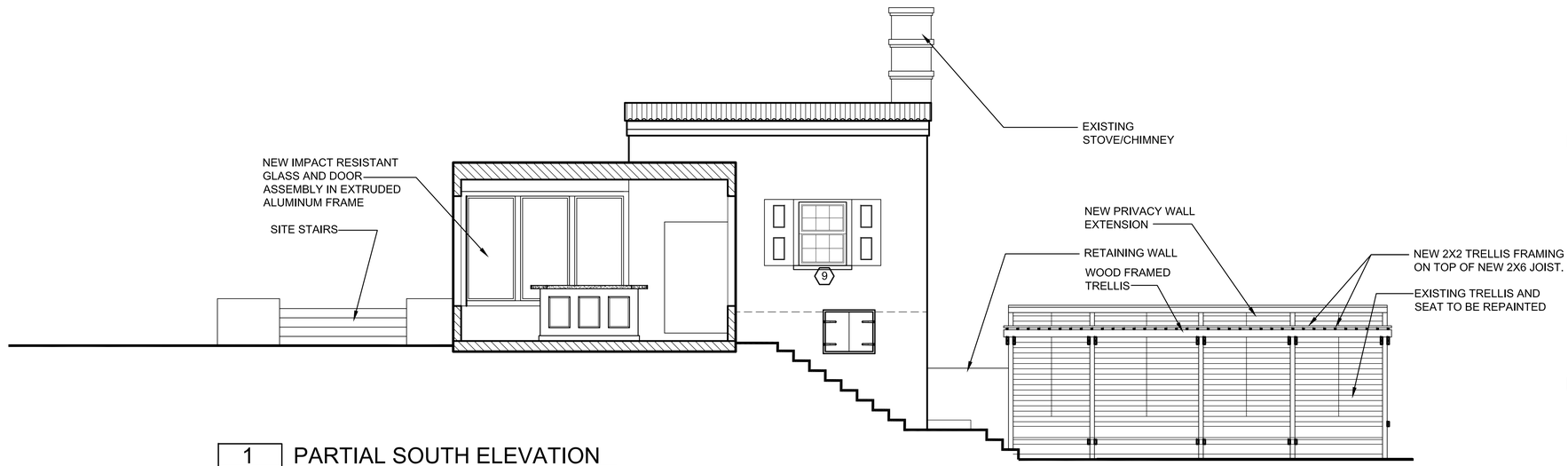

1 | PARTIAL SOUTH ELEVATION
A2.5 | A2.5
SCALE: 1/4"=1'-0"

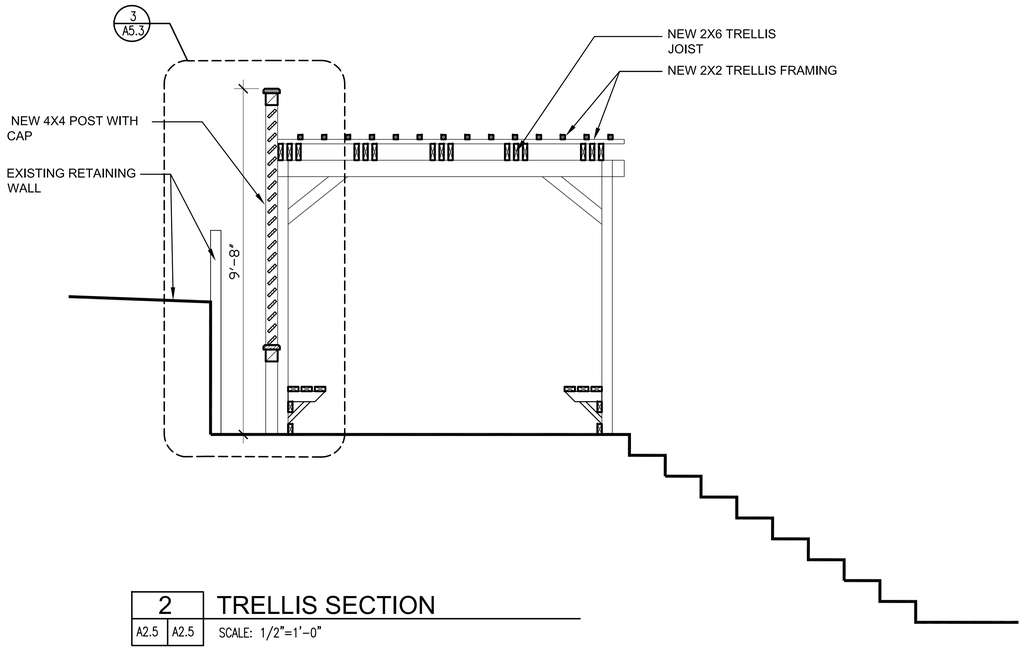

2 | TRELLIS SECTION
A2.5 | A2.5
SCALE: 1/2"=1'-0"

NOTE:

1. THE ENTIRE WALLS, INCLUSIVE OF SHUTTERS, DOORS, RAILS, POST AND PILASTERS SHALL BE PAINTED AS PART OF THE PHASE II SCOPE.
2. FIRST FLOOR WINDOWS AND DOORS WHERE INSTALLED UNDER PHASE I CONSTRUCTION ARE NOT INCLUDED IN THE SCOPE OF WORK.
3. CONTRACTOR SHALL REMOVE AND DISCARD AS PART OF PHASE II WORK ALL OBSOLETE CONDUIT, WIRES, EQUIPMENT ETC.

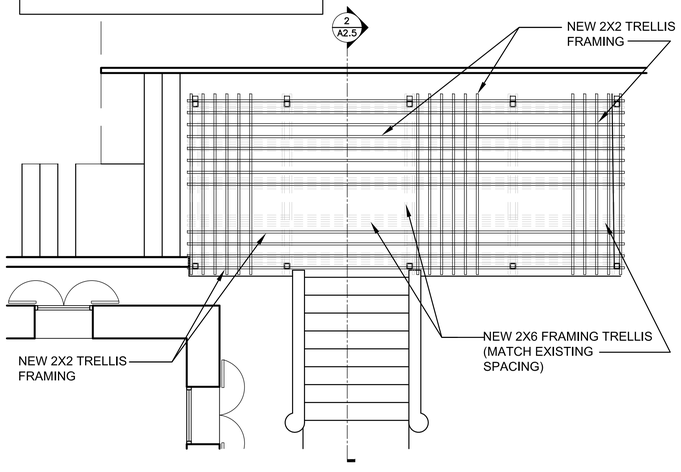

3 | TRELLIS FLOOR PLAN
A2.5 | A2.5
SCALE: 1/4"=1'-0"

REVISIONS		
NO:	DATE:	REMARKS

CONSULTANTS

Jaredian Design Group
Architects, Engineers, Construction Managers
No.33 Dronningens Gade - Queen's Quarter
Post Office Box 6218
St. Thomas, U.S. Virgin Islands 00804
telephone: 340.777.1600 fax: 340.777.1601
e-mail: jaredian2@vipowernet.net

THESE PLANS AND THE DESIGNS CONTAINED HEREIN ARE THE SOLE PROPERTY OF JAREDIAN DESIGN GROUP. THESE PLANS MAY NOT BE REPRODUCED WITHOUT THE WRITTEN PERMISSION OF JAREDIAN DESIGN GROUP. UNAUTHORIZED USE SHALL INVITE A CLAIM FOR COMPENSATION. THE USE BY ANY PERSON OR FIRM OF THESE PLANS OR ANY PART THEREOF SHALL NOT IN ANY WAY SUBJECT JAREDIAN DESIGN GROUP TO ANY COST OR DAMAGES FOR ANY ERROR OR OMISSION CONTAINED THEREIN.

PHASE II RENOVATION TO
PARCEL NO 19A & 20
KONGENS GADE
KINGS QUARTER
ST. THOMAS,
U.S.V.I. 00802-5858

DATE: 12-2-15
DRAWN BY: R.O.P
CHECKED BY: J.P.W.
APPROVED BY: J.P.W.

PROJECT NO.: 13-002
CONTRACT NO.:

SHEET NO.:
A2.5
PROPOSED ELEVATIONS

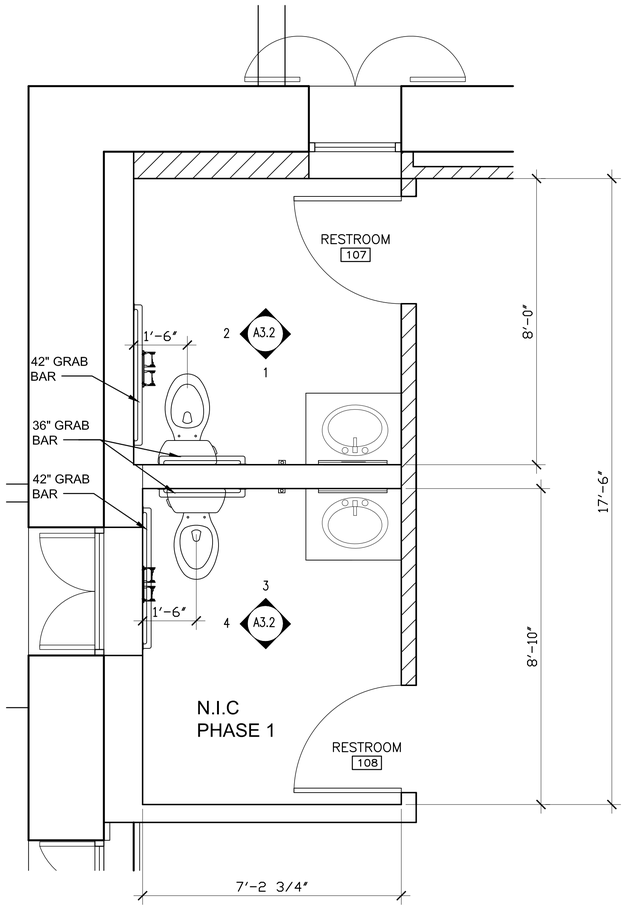

1	
A3.1	A3.1

RESTROOM 107 AND 108
ENLARGED FLOOR PLANS

SCALE: 1/2" = 1'-0"

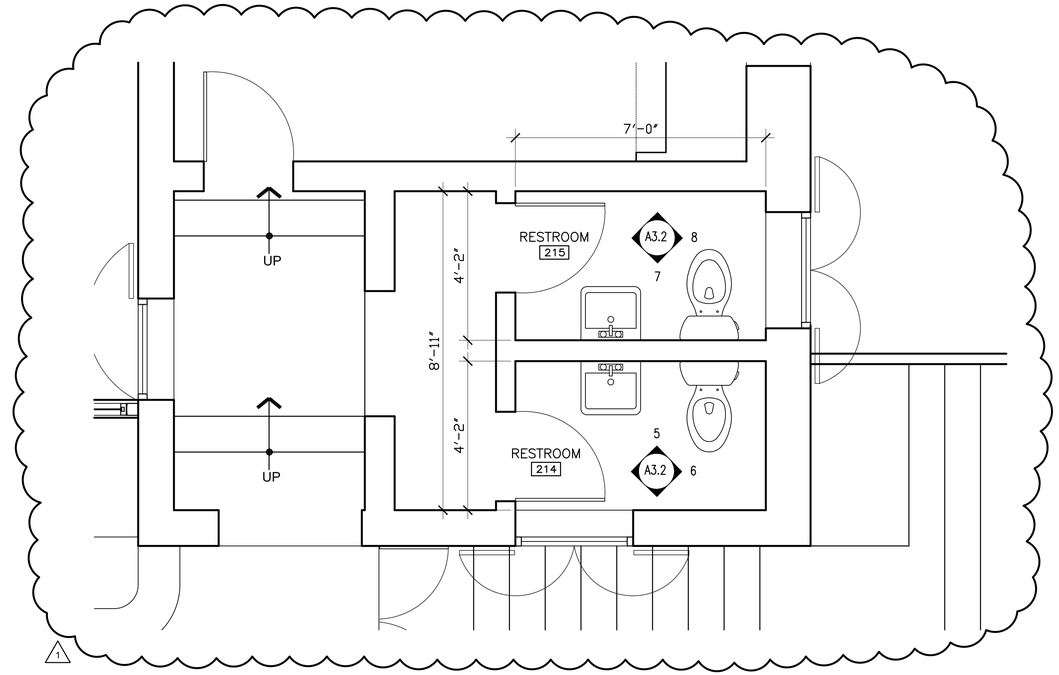

2	
A3.1	A3.1

RESTROOM 214 AND 215
ENLARGED FLOOR PLANS

SCALE: 1/2" = 1'-0"

REVISIONS

NO.	DATE	REMARKS
1	8-14-14	REVISION NO.1

CONSULTANTS

Jaredian Design Group
Architects, Engineers, Construction Managers
No.33 Dronningens Gade - Queen's Quarter
Post Office Box 6218
St. Thomas, U.S. Virgin Islands 00804
telephone: 340.777.1600 fax: 340.777.1601
e-mail: jaredian2@vipowernet.net

THESE PLANS AND THE DESIGNS CONTAINED HEREIN ARE THE SOLE PROPERTY OF JAREDIAN DESIGN GROUP. THESE PLANS MAY NOT BE REPRODUCED WITHOUT THE WRITTEN PERMISSION OF JAREDIAN DESIGN GROUP. UNAUTHORIZED USE SHALL INVITE A CLAIM FOR COMPENSATION. THE USE BY ANY PERSON OR FIRM OF THESE PLANS OR ANY PART THEREOF SHALL NOT IN ANY WAY SUBJECT JAREDIAN DESIGN GROUP TO ANY COST OR DAMAGES FOR ANY ERROR OR OMISSION CONTAINED THEREIN.

PHASE II RENOVATION TO
PARCEL NO 19A & 20
KONGENS GADE
KINGS QUARTER
ST. THOMAS,
U.S.V.I. 00802-5858

DATE: 12-2-15
DRAWN BY: R.O.P
CHECKED BY: J.P.W.
APPROVED BY: J.P.W.

PROJECT NO.: 13-002
CONTRACT NO.:

SHEET NO.:
A3.1

ENLARGED
FLOOR PLANS

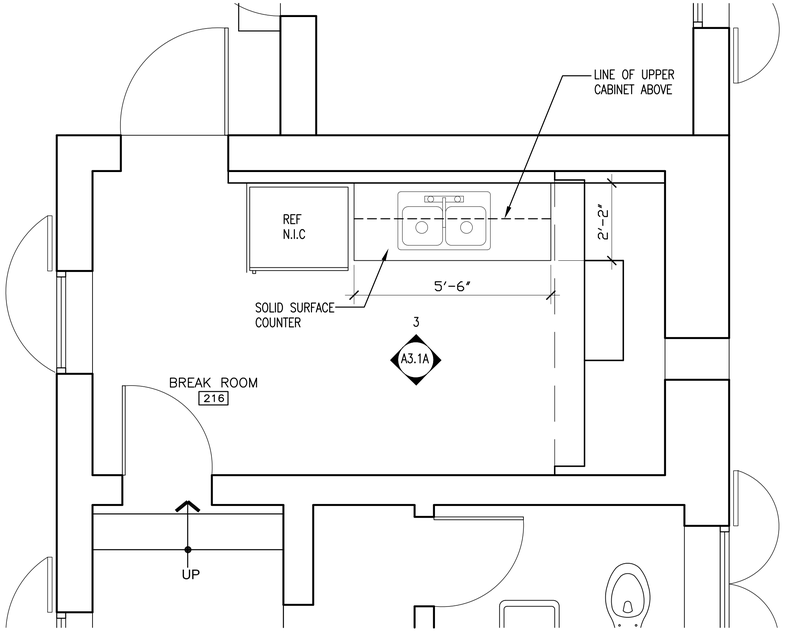

BREAK ROOM 216 ENLARGED FLOOR PLAN

1	
A3.1A	A3.1A

SCALE: 1/2" = 1'-0"

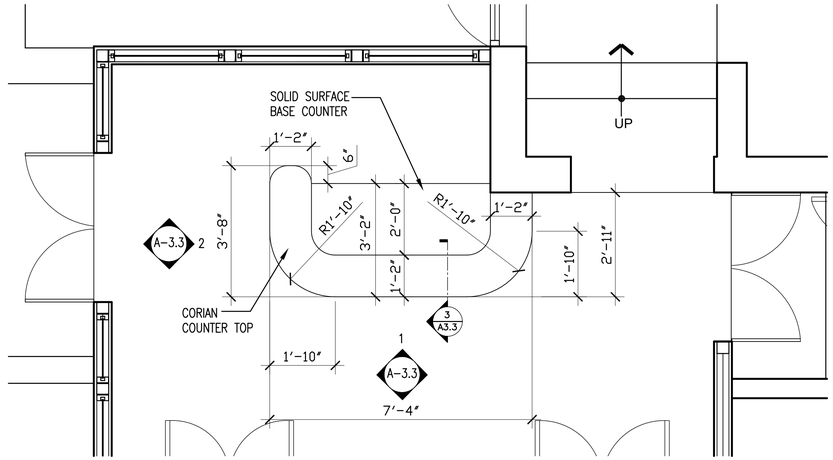

RECEPTION DESK

2	
A3.1A	A3.1A

SCALE: 1/2" = 1'-0"

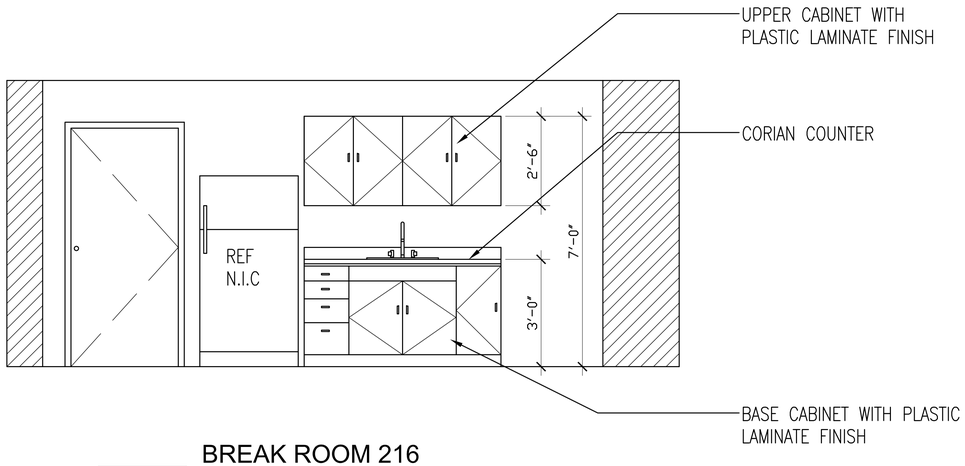

BREAK ROOM 216 CASEWORK ELEVATION

3	
A3.1A	A3.1A

SCALE: 1/2" = 1'-0"

REVISIONS		
NO:	DATE:	REMARKS

CONSULTANTS

Jaredian Design Group
Architects, Engineers, Construction Managers
No.33 Dronningens Gade - Queen's Quarter
Post Office Box 6218
St. Thomas, U.S. Virgin Islands 00804
telephone: 340.777.1600 fax: 340.777.1601
e-mail: jaredian2@vipowernet.net

THESE PLANS AND THE DESIGNS CONTAINED HEREIN ARE THE SOLE PROPERTY OF JAREDIAN DESIGN GROUP. THESE PLANS MAY NOT BE REPRODUCED WITHOUT THE WRITTEN PERMISSION OF JAREDIAN DESIGN GROUP. UNAUTHORIZED USE SHALL INVITE A CLAIM FOR COMPENSATION. THE USE BY ANY PERSON OR FIRM OF THESE PLANS OR ANY PART THEREOF SHALL NOT IN ANY WAY SUBJECT JAREDIAN DESIGN GROUP TO ANY COST OR DAMAGES FOR ANY ERROR OR OMISSION CONTAINED THEREIN.

PHASE II RENOVATION TO
PARCEL NO 19A & 20
KONGENS GADE
KINGS QUARTER
ST. THOMAS,
U.S.V.I. 00802-5858

DATE: 12-2-15
DRAWN BY: R.O.P
CHECKED BY: J.P.W.
APPROVED BY: J.P.W.

PROJECT NO: 13-002
CONTRACT NO:

SHEET NO:
A3.1A
ENLARGED FLOOR PLANS

REGISTERED ARCHITECT
U.S. VIRGIN ISLANDS

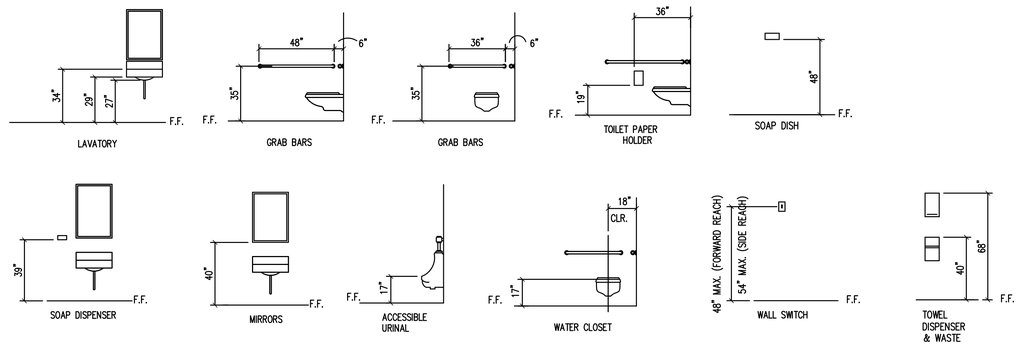

TYPICAL FIXTURE MOUNTING HEIGHTS

0 | A3.1 | A3.1

SCALE: N.T.S.

RESTROOM ACCESSORIES SCHEDULE

ITEM	DESCRIPTION	MANUFACTURER	MODEL NO.	FINISH	REMARKS
1	GRAB BAR			STAINLESS STEEL	
2	MIRROR WITH WOOD TRIM				
3	TOWEL DISPENSER	BOBRICK		STAINLESS STEEL	
4	SOAP DISPENSER	BOBRICK		STAINLESS STEEL	
5	TOILET PAPER HOLDER	BOBRICK		STAINLESS STEEL	
6	PROTECTIVE PIPE COVER				
7	UNDER-MOUNT SINK				

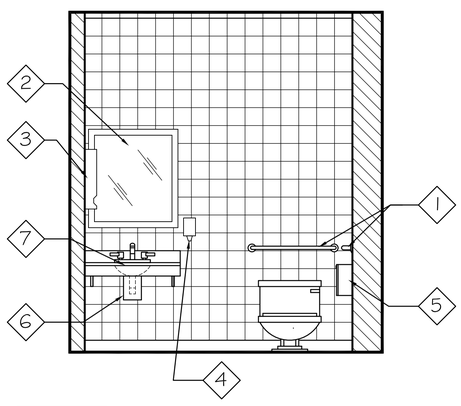

1 | A3.2 | A3.2 — RESTROOM 107 ELEVATION

SCALE: 1/2" = 1'-0"

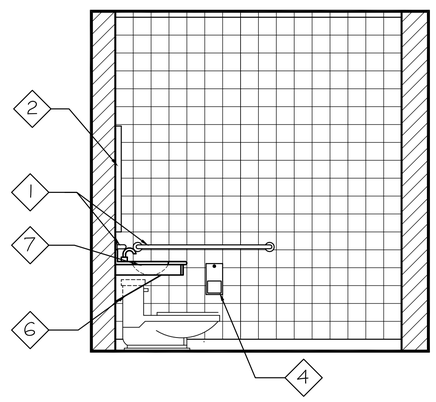

2 | A3.2 | A3.2 — RESTROOM 107 ELEVATION

SCALE: 1/2" = 1'-0"

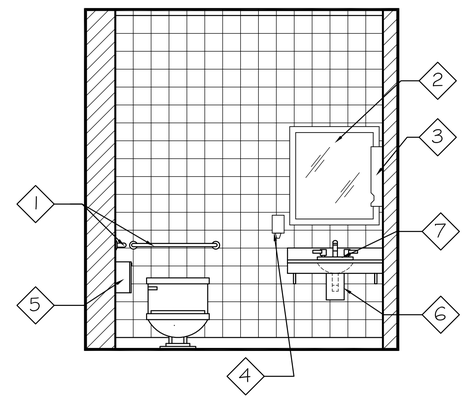

3 | A3.2 | A3.2 — RESTROOM 108 ELEVATION

SCALE: 1/2" = 1'-0"

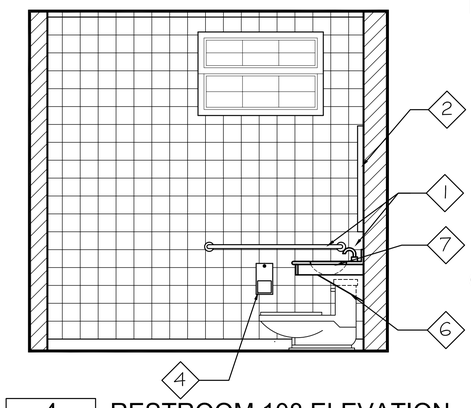

4 | A3.2 | A3.2 — RESTROOM 108 ELEVATION

SCALE: 1/2" = 1'-0"

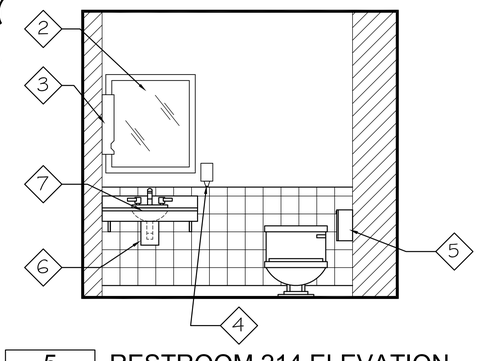

5 | A3.2 | A3.2 — RESTROOM 214 ELEVATION

SCALE: 1/2" = 1'-0"

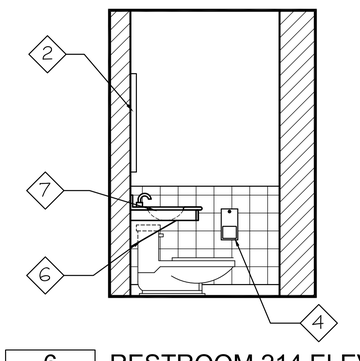

6 | A3.2 | A3.2 — RESTROOM 214 ELEVATION

SCALE: 1/2" = 1'-0"

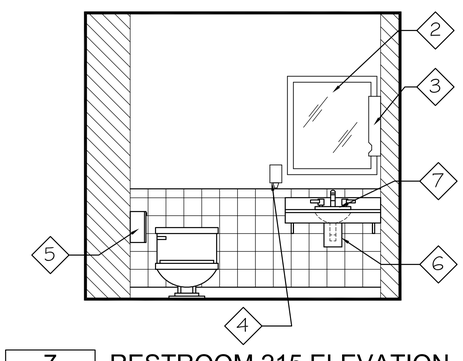

7 | A3.2 | A3.2 — RESTROOM 215 ELEVATION

SCALE: 1/2" = 1'-0"

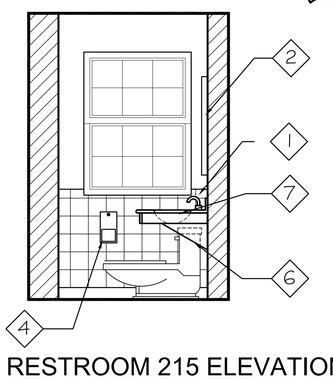

8 | A3.2 | A3.2 — RESTROOM 215 ELEVATION

SCALE: 1/2" = 1'-0"

REVISIONS		
NO:	DATE:	REMARKS
1	8-14-14	REVISION NO.1

CONSULTANTS

Jaredian Design Group
Architects, Engineers, Construction Managers
No.33 Dronningens Gade - Queen's Quarter
Post Office Box 6218
St. Thomas, U.S. Virgin Islands 00804
telephone: 340.777.1600 fax: 340.777.1601
e-mail: jaredian2@vipowernet.net

THESE PLANS AND THE DESIGNS CONTAINED HEREIN ARE THE SOLE PROPERTY OF JAREDIAN DESIGN GROUP. THESE PLANS MAY NOT BE REPRODUCED WITHOUT THE WRITTEN PERMISSION OF JAREDIAN DESIGN GROUP. UNAUTHORIZED USE SHALL INVITE A CLAIM FOR COMPENSATION. THE USE BY ANY PERSON OR FIRM OF THESE PLANS OR ANY PART THEREOF SHALL NOT IN ANY WAY SUBJECT JAREDIAN DESIGN GROUP TO ANY COST OR DAMAGES FOR ANY ERROR OR OMISSION CONTAINED THEREIN.

PHASE II RENOVATION TO
PARCEL NO 19A & 20
KONGENS GADE
KINGS QUARTER
ST. THOMAS,
U.S.V.I. 00802-5858

DATE: 12-2-15

DRAWN BY: R.O.P

CHECKED BY: J.P.W.

APPROVED BY: J.P.W.

PROJECT NO: 13-002

CONTRACT NO:

SHEET NO: A3.2

RESTROOM ELEVATIONS

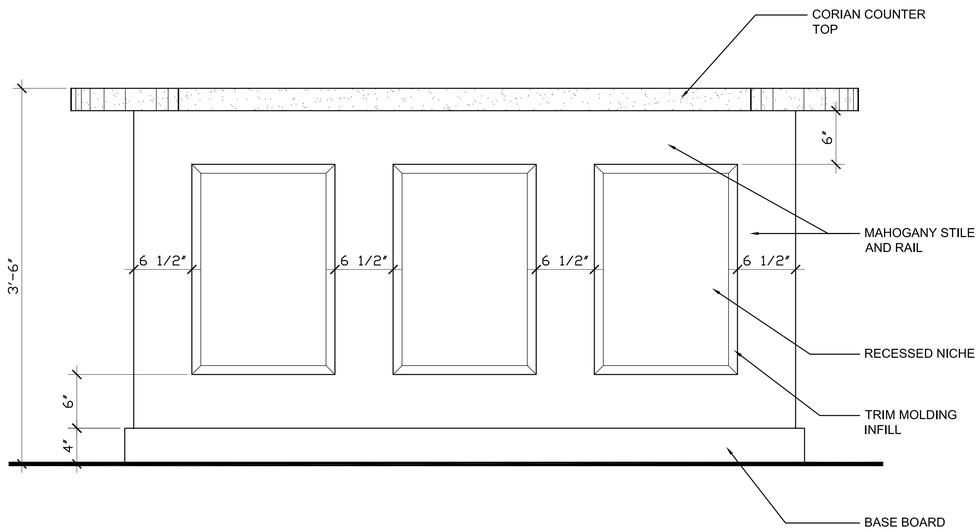

1	CASEWORK ELEVATION
A3.3 A3.3	SCALE: 1-1/2" = 1'-0"

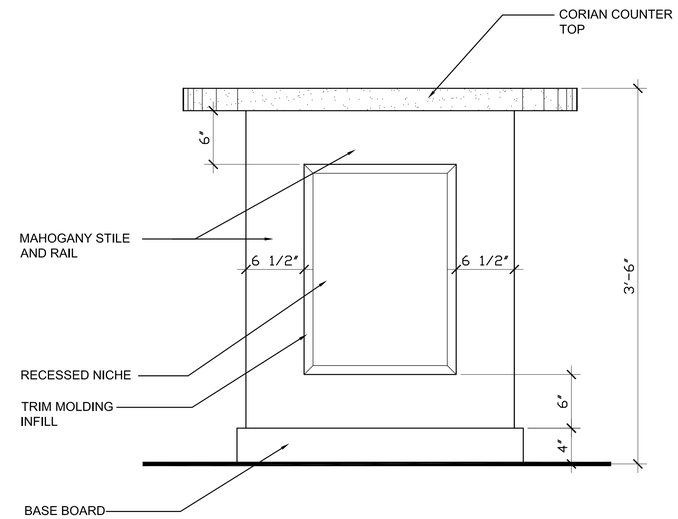

2	CASEWORK ELEVATION
A3.3 A3.3	SCALE: 1-1/2" = 1'-0"

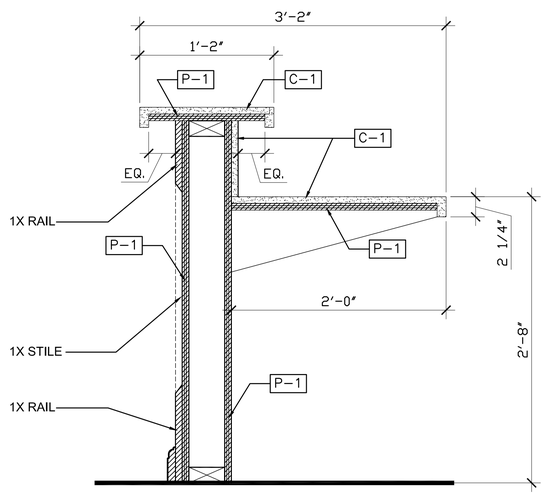

3	CASEWORK SECTION
A3.3 A3.3	SCALE: 1-1/2" = 1'-0"

LEGEND

P-1	3/4" MAHOGANY PLYWOOD
C-1	CORIAN

REVISIONS

NO:	DATE:	REMARKS

CONSULTANTS

Jaredian Design Group
Architects, Engineers, Construction Managers
No.33 Dronningens Gade - Queen's Quarter
Post Office Box 6218
St. Thomas, U.S. Virgin Islands 00804
telephone: 340.777.1600 fax: 340.777.1601
e-mail: jaredian2@vipowernet.net

THESE PLANS AND THE DESIGNS CONTAINED HEREIN ARE THE SOLE PROPERTY OF JAREDIAN DESIGN GROUP. THESE PLANS MAY NOT BE REPRODUCED WITHOUT THE WRITTEN PERMISSION OF JAREDIAN DESIGN GROUP. UNAUTHORIZED USE SHALL INVITE A CLAIM FOR COMPENSATION. THE USE BY ANY PERSON OR FIRM OF THESE PLANS OR ANY PART THEREOF SHALL NOT IN ANY WAY SUBJECT JAREDIAN DESIGN GROUP TO ANY COST OR DAMAGES FOR ANY ERROR OR OMISSION CONTAINED THEREIN.

PHASE II RENOVATION TO
PARCEL NO 19A & 20
KONGENS GADE
KINGS QUARTER
ST. THOMAS,
U.S.V.I. 00802-5858

DATE: 12-2-15
DRAWN BY: R.O.P
CHECKED BY: J.P.W.
APPROVED BY: J.P.W.

PROJECT NO: 13-002
CONTRACT NO:

SHEET NO:
A3.3
CASEWORK ELEVATIONS

REGISTERED ARCHITECT U.S. VIRGIN ISLANDS

ROOM FINISH SCHEDULE

ROOM NO	NAME	FLOOR MATL	FLOOR FIN	BASE MATL	BASE FIN	WALL NORTH MATL	WALL NORTH FIN	WALL EAST MATL	WALL EAST FIN	WALL SOUTH MATL	WALL SOUTH FIN	WALL WEST MATL	WALL WEST FIN	CEILING MATL	CEILING FIN	CEILING HEIGHT	REMARKS
FIRST FLOOR																	
100	TELEPHONE																
101	GENERAL OFFICE AREA	CONC.	T	B2		BB	PNT	BB	PNT	BB	PNT	BB	PNT	GWB	PNT		
102	DIRECTOR OF BUREAU ECONOMIC RESOURCE	CONC.	T	B2		BB	PNT	BB	PNT	BB	PNT	BB	PNT	GWB	PNT		
103	CONFERENCE ROOM	CONC.	T	B2		BB	PNT	BB	PNT	BB	PNT	BB	PNT	GWB	PNT		
104	UTILITY ROOM	CONC.	T	B2		BB	PNT	BB	PNT	BB	PNT	BB	PNT	GWB	PNT		
105	STORE ROOM	CONC.	T	B2		BB	PNT	BB	PNT	BB	PNT	BB	PNT	GWB	PNT		
106	CORRIDOR	CONC.	T	B2		BB	PNT	BB	PNT	BB	PNT	BB	PNT	GWB	PNT		
107	RESTROOM	CONC.	T	B1		GWB	PNT	GWB	PNT	GWB	PNT	GWB	PNT	GWB	PNT		
108	RESTROOM	CONC.	T	B1		GWB	PNT	GWB	PNT	GWB	PNT	GWB	PNT	GWB	PNT		

FIRST FLOOR DOOR SCHEDULE

DOOR NUMBER	DESCRIPTION	TYPE	QTY	SIZE W	SIZE H	SIZE T	HARDWARE	CLOSURE (Y, N)	KICK PLATES	REMARKS
100										EXISTING DOOR TO BE REFURBISHED. PROVIDE NEW HARDWARE,DOOR TRIM AND FRAME
100.1										EXISTING GATE TO BE RETROFITTED WITH AND ELECTRONIC LOCK AND STRIKE PLATE
101		B								EXISTING DOOR TO BE REFURBISHED. PROVIDE NEW HARDWARE,DOOR TRIM AND FRAME
102A		B								EXISTING DOOR TO BE REFURBISHED. PROVIDE NEW HARDWARE,DOOR TRIM AND FRAME
102B	SOLID CORE WOOD STYLE AND RAIL	A		36	80					
103	SOLID CORE WOOD STYLE AND RAIL	A		36	80					
104	SOLID CORE WOOD STYLE AND RAIL	A		36	80					
105	SOLID CORE WOOD STYLE AND RAIL	A		36	80					
107	SOLID CORE WOOD STYLE AND RAIL	A		36	80					
108	SOLID CORE WOOD STYLE AND RAIL			36	80					

FLOOR

CONC.	CONCRETE
CT	CARPET TILE
T	PORCELAIN TILE
HW	HARD WOOD

BASE

B-1	TILE
B-2	1X6 WITH ROUTED EDGES
VCB	VINYL COVE BASE
PNT	PAINTED FINISH

WALL

T	PORCELAIN TILE
CMU	CONCRETE MASONRY UNIT
CWB	CEMENT WALL BOARD
GWB	GYPSUM WALL BOARD
PNT	PAINTED FINISH
BB	PLYWOOD BEAD BOARD SHEATHING
EMW	EXISTING MASONRY WALL

CEILING

GWB	GYPSUM BOARD
CONC.	CONCRETE
PNT.	PAINTED FINISH
ACT	ACOUSTIC CEILING TILE
E.S	EXPOSED STRUCTURE

WINDOW SCHEDULE

TYPE	DESCRIPTION	SIZE W x H	HEADER HEIGHT A.F.F.	MANUFATURER	GLASS TYPE	MATERIAL	COLOR	REMARKS
1	DOUBLE HUNG	3'-0" X 4'-6"				ALUMINUM	WHITE	IMPACT RESISTANT GLASS REINSTALL EXISTING JALOUSIE SHUTTER
2	DOUBLE HUNG	2'-6" X 2'-10"				ALUMINUM	WHITE	IMPACT RESISTANT GLASS REINSTALL EXISTING JALOUSIE SHUTTER
3	DOUBLE HUNG	3'-6" X 2'-4"				ALUMINUM	WHITE	IMPACT RESISTANT GLASS REINSTALL EXISTING JALOUSIE SHUTTER
4	DOUBLE HUNG	2'-0" X 2'-0"				ALUMINUM	WHITE	IMPACT RESISTANT GLASS REINSTALL EXISTING JALOUSIE SHUTTER
5	DOUBLE HUNG	3'-4" X 2'-8"				ALUMINUM	WHITE	IMPACT RESISTANT GLASS REINSTALL EXISTING JALOUSIE SHUTTER
6	DOUBLE HUNG	3'-6" X 3'-4"				ALUMINUM	WHITE	IMPACT RESISTANT GLASS REINSTALL EXISTING JALOUSIE SHUTTER
7	DOUBLE HUNG	2'-0" X 4'-0"				ALUMINUM	WHITE	IMPACT RESISTANT GLASS REINSTALL EXISTING JALOUSIE SHUTTER
8	DOUBLE HUNG	2'-6" X 4'-0"				ALUMINUM	WHITE	IMPACT RESISTANT GLASS REINSTALL EXISTING JALOUSIE SHUTTER
9	DOUBLE HUNG	3'-0" X 4'-0"				ALUMINUM	WHITE	IMPACT RESISTANT GLASS REINSTALL EXISTING JALOUSIE SHUTTER
10	DOUBLE HUNG	3'-0" X 6'-0"				ALUMINUM	WHITE	IMPACT RESISTANT GLASS REINSTALL EXISTING JALOUSIE SHUTTER

NOTE:

1. ALL DIMENSIONS ARE NOMINAL. ACTUAL DIMENSIONS TO BE PROVIDED BY CONTRACTOR
2. CONTRACTOR SHALL PROVIDE ALL HARDWARE FOR WINDOWS COMPLETE WITH SCREENS.
3. THE CONTRACTOR SHALL PROVIDE ALL NECESSARY SHIMS NAILER OR BLOCKING REQUIRED AND SHALL VERIFY ALL WINDOW OPENING PRIOR TO ORDERING WINDOWS
4. CONTRACTOR SHALL VERIFY ALL WINDOW ROUGH OPENING REQUIREMENTS AS ROUGH OPENING MAY VARY BETWEEN MANUFACTURER
5. ALL GLASS USED SHALL BE LOW EMISSIVE DOUBLE GLAZING IMPACT RESISTANT
6. THE CONTRACTOR IS RESPONSIBLE FOR ALL MISCELLANEOUS AND REQUIRED WOOD FRAMING. BLOCKING. BUCKS. TRIM, CASING FOR THE PROPER INSTALLATIONS OF THE WINDOWS AND DOORS.

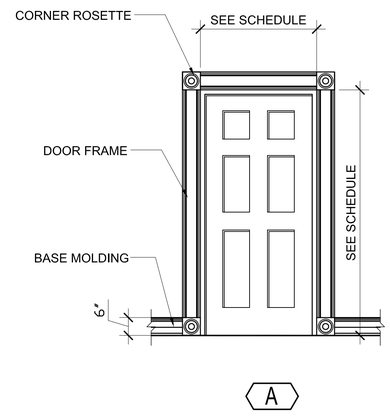

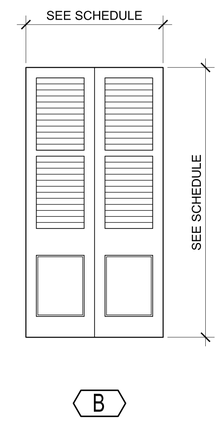

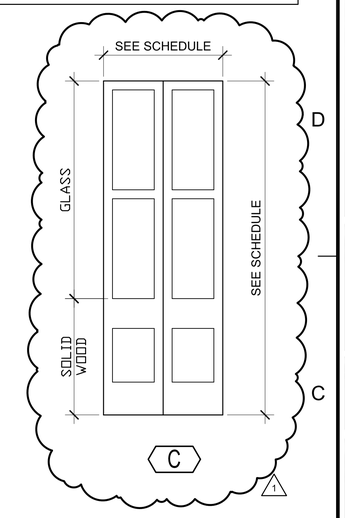

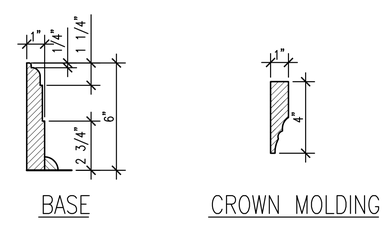

1 INTERIOR TRIM DETAIL

A4.0 | A4.0 SCALE: 3"=1'-0"

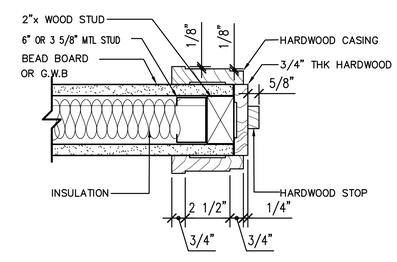

2 STUD FRAMED WALL DOOR JAMB DETAIL- INTERIOR

A4.0 | A4.0 SCALE: 3"=1'-0"

REVISIONS		
NO:	DATE:	REMARKS
1	8-14-14	REVISION NO.1

CONSULTANTS

Jaredian Design Group
Architects, Engineers, Construction Managers
No.33 Dronningens Gade - Queen's Quarter
Post Office Box 6218
St. Thomas, U.S. Virgin Islands 00804
telephone: 340.777.1600 fax: 340.777.1601
e-mail: jaredian2@vipowernet.net

THESE PLANS AND THE DESIGNS CONTAINED HEREIN ARE THE SOLE PROPERTY OF JAREDIAN DESIGN GROUP. THESE PLANS MAY NOT BE REPRODUCED WITHOUT THE WRITTEN PERMISSION OF JAREDIAN DESIGN GROUP. UNAUTHORIZED USE SHALL INVITE A CLAIM FOR COMPENSATION. THE USE BY ANY PERSON OR FIRM OF THESE PLANS OR ANY PART THEREOF SHALL NOT IN ANY WAY SUBJECT JAREDIAN DESIGN GROUP TO ANY COST OR DAMAGES FOR ANY ERROR OR OMISSION CONTAINED THEREIN.

PHASE II RENOVATION TO
PARCEL NO 19A & 20
KONGENS GADE
KINGS QUARTER
ST. THOMAS,
U.S.V.I. 00802-5858

DATE: 12-2-15
DRAWN BY: R.O.P
CHECKED BY: J.P.W.
APPROVED BY: J.P.W.

PROJECT NO: 13-002
CONTRACT NO:

SHEET NO:
A4.0

SCHEDULES

SECOND FLOOR ROOM FINISH SCHEDULE

ROOM NO	NAME	FLOOR MATL	FLOOR FIN	BASE MATL	BASE FIN	WALL NORTH MATL	WALL NORTH FIN	WALL EAST MATL	WALL EAST FIN	WALL SOUTH MATL	WALL SOUTH FIN	WALL WEST MATL	WALL WEST FIN	CEILING MATL	CEILING FIN	CEILING HEIGHT	REMARKS
SECOND FLOOR																	
200	RECEPTION LOBBY	T	B1	PNT													PAINT ALL WALLS
201	TRAINING/ CONFERENCE ROOM	HW	B2	PNT		GWB	PNT	GWB	PNT	GWB	PNT	GWB	PNT	GWB	PNT		WAINSCOT ALL WALLS
202	OFFICE	HW	B2	PNT		GWB	PNT	GWB	PNT	GWB	PNT	GWB	PNT	GWB	PNT		WAINSCOT ALL WALLS
203	OFFICE	HW	B2	PNT		GWB	PNT	GWB	PNT	GWB	PNT	GWB	PNT	GWB	PNT		WAINSCOT ALL WALLS
204	TERRACE	HW	B2	PNT		E.S	PNT										
205	OFFICE	HW	B2	PNT		GWB	PNT	GWB	PNT	GWB	PNT	GWB	PNT	GWB	PNT		WAINSCOT ALL WALLS
206	OFFICE	HW	B2	PNT		GWB	PNT	GWB	PNT	GWB	PNT	GWB	PNT	GWB	PNT		WAINSCOT ALL WALLS
207	OFFICE	HW	B2	PNT		GWB	PNT	GWB	PNT	GWB	PNT	GWB	PNT	GWB	PNT		WAINSCOT ALL WALLS
208	COPIER	HW	B2	PNT		GWB	PNT	GWB	PNT	GWB	PNT	GWB	PNT	GWB	PNT		
209	MECHANICAL	HW	B2	PNT		GWB	PNT	GWB	PNT	GWB	PNT	GWB	PNT	GWB	PNT		
210	CORRIDOR	HW	B2	PNT		GWB	PNT	GWB	PNT	GWB	PNT	GWB	PNT	GWB	PNT		WAINSCOT ALL WALLS
211	OFFICE	HW	B2	PNT		GWB	PNT	GWB	PNT	GWB	PNT	GWB	PNT	GWB	PNT		WAINSCOT ALL WALLS
212	OFFICE	HW	B2	PNT		GWB	PNT	GWB	PNT	GWB	PNT	GWB	PNT	GWB	PNT		WAINSCOT ALL WALLS
213	FILE STORAGE	HW	B2	PNT		GWB	PNT	GWB	PNT	GWB	PNT	GWB	PNT				WAINSCOT ALL WALLS
214	RESTROOM	T	B1	PNT		GWB	PNT	GWB	PNT	GWB	PNT	GWB	PNT	E.S	PNT		SEE RESTROOM ELEV.
214.1	VESTIBULE	T	B2	PNT			PNT		PNT		PNT		PNT	E.S	PNT		
215	RESTROOM	T	B1	PNT		GWB	PNT	GWB	PNT	GWB	PNT	GWB	PNT	E.S	PNT		SEE RESTROOM ELEV.
216	BREAK ROOM	T	B2	PNT			PNT		PNT		PNT		PNT	E.S	PNT		
217	STORE ROOM	CONC.	B2	PNT			PNT		PNT		PNT		PNT	E.S	PNT		
218	STORAGE	CONC.	B2	PNT			PNT		PNT		PNT		PNT	E.S	PNT		

FLOOR

CONC.	CONCRETE
CT	CARPET TILE
T	PORCELAIN TILE
HW	HARD WOOD

BASE

B-1	TILE
B-2	1X6 WITH ROUTED EDGES
VCB	VINYL COVE BASE
PNT	PAINTED FINISH

WALL

T	PORCELAIN TILE
CMU	CONCRETE MASONRY UNIT
CWB	CEMENT WALL BOARD
GWB	GYPSUM WALL BOARD
PNT	PAINTED FINISH
BB	PLYWOOD BEAD BOARD SHEATHING
EMW	EXISTING MASONRY WALL

CEILING

GWB	GYPSUM BOARD
CONC.	CONCRETE
PNT.	PAINTED FINISH
ACT	ACOUSTIC CEILING TILE
E.S	EXPOSED STRUCTURE

SECOND FLOOR DOOR SCHEDULE

DOOR NUMBER	DESCRIPTION	TYPE	QTY	SIZE W	SIZE H	SIZE T	HARDWARE	CLOSURE (Y, N)	KICK PLATES	REMARKS
200A	SINGLE PANE FRENCH			48"	80"					MEDIUM STILE AND RAIL IMPACT RESISTANT GLASS
200B	SINGLE PANE FRENCH			48"	80"					MEDIUM STILE AND RAIL IMPACT RESISTANT GLASS
201	FRENCH DOOR	C		42"	108"					PROVIDE NEW HARDWARE,DOOR TRIM AND FRAME
202	WOOD SINGLE PANE GLASS	D		36"	84"					DOOR WITH SIDELIGHT ASSEMBLY
203	WOOD SINGLE PANE GLASS	D		36"	84"					DOOR WITH SIDELIGHT ASSEMBLY
204A	FRENCH DOOR	C		36"	108"					PROVIDE NEW HARDWARE,DOOR TRIM AND FRAME
204B	FRENCH DOOR	C		36"	108"					PROVIDE NEW HARDWARE,DOOR TRIM AND FRAME
205	WOOD SINGLE PANE GLASS	E		36"	84"					DOOR WITH SIDELIGHT ASSEMBLY
206	WOOD SINGLE PANE GLASS	E		36"	84"					DOOR WITH SIDELIGHT ASSEMBLY ADD ALTERNATE NO.1
207	WOOD SINGLE PANE GLASS	E		36"	84"					DOOR WITH SIDELIGHT ASSEMBLY ADD ALTERNATE NO.1
209	SOLID CORE WOOD STYLE AND RAIL	A		36	80					DOOR WITH SIDELIGHT ASSEMBLY ADD ALTERNATE NO.1
210	FRENCH DOOR	C		42"	108"					PROVIDE NEW HARDWARE,DOOR TRIM AND FRAME
211	WOOD SINGLE PANE GLASS	D		36"	84"					DOOR WITH SIDELIGHT ASSEMBLY
212	WOOD SINGLE PANE GLASS	D		36"	84"					DOOR WITH SIDELIGHT ASSEMBLY
213	FRENCH DOOR	C		36"	108"					PROVIDE NEW HARDWARE,DOOR TRIM AND FRAME
214	SOLID CORE WOOD STYLE AND RAIL	A		36"	80"					
215	SOLID CORE WOOD STYLE AND RAIL	A		36"	80"					
216A	SOLID CORE WOOD STYLE AND RAIL	A		36"	80"					
216B	SOLID CORE WOOD			36"	80"					EXISTING DOOR TO BE REPAINTED
217A	HOLLOW METAL	F		30"	84"					
217B	HOLLOW METAL	F		30"	84"					
217C	SOLID CORE WOOD STYLE AND RAIL	A		36"	80"					DOOR TO REMAIN
217D	SOLID CORE WOOD STYLE AND RAIL	A		36"	80"					DOOR TO REMAIN
218	HOLLOW METAL	A		36"	80"					

NOTE:
SEE SHEET A4.0 FOR DOOR ELEVATIONS.

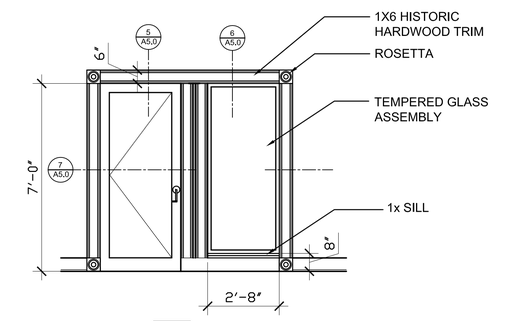

D

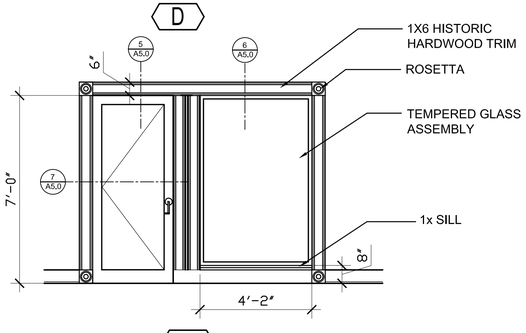

E

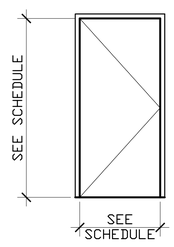

F

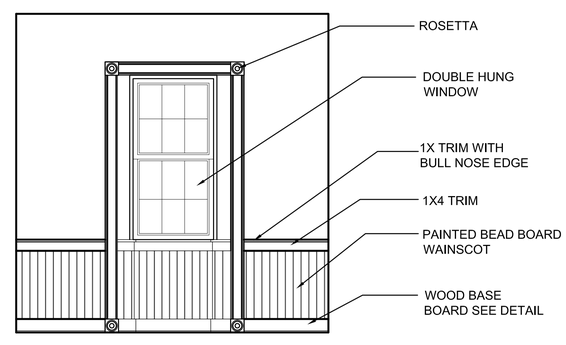

1 | A4.0A | A4.0A
TYPICAL WINDOW DETAIL
SCALE: 3/8"=1'-0"

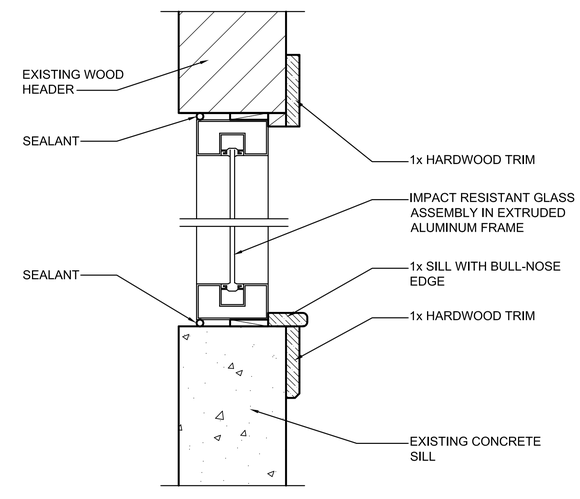

2 | A4.0A | A4.0A
HEADER AND SILL DETAIL
SCALE: 3"=1'-0"

REVISIONS

NO:	DATE:	REMARKS

CONSULTANTS

Jaredian Design Group
Architects, Engineers, Construction Managers
No.33 Dronningens Gade - Queen's Quarter
Post Office Box 6218
St. Thomas, U.S. Virgin Islands 00804
telephone: 340.777.1600 fax: 340.777.1601
e-mail: jaredian2@vipowernet.net

THESE PLANS AND THE DESIGNS CONTAINED HEREIN ARE THE SOLE PROPERTY OF JAREDIAN DESIGN GROUP. THESE PLANS MAY NOT BE REPRODUCED WITHOUT THE WRITTEN PERMISSION OF JAREDIAN DESIGN GROUP. UNAUTHORIZED USE SHALL INVITE A CLAIM FOR COMPENSATION. THE USE BY ANY PERSON OR FIRM OF THESE PLANS OR ANY PART THEREOF SHALL NOT IN ANY WAY SUBJECT JAREDIAN DESIGN GROUP TO ANY COST OR DAMAGES FOR ANY ERROR OR OMISSION CONTAINED THEREIN.

PHASE II RENOVATION TO
PARCEL NO 19A & 20
KONGENS GADE
KINGS QUARTER
ST. THOMAS,
U.S.V.I. 00802-5858

DATE: 12-2-15
DRAWN BY: R.O.P
CHECKED BY: J.P.W.
APPROVED BY: J.P.W.

PROJECT NO.: 13-002
CONTRACT NO.:

SHEET NO.:
A4.0A

SCHEDULES

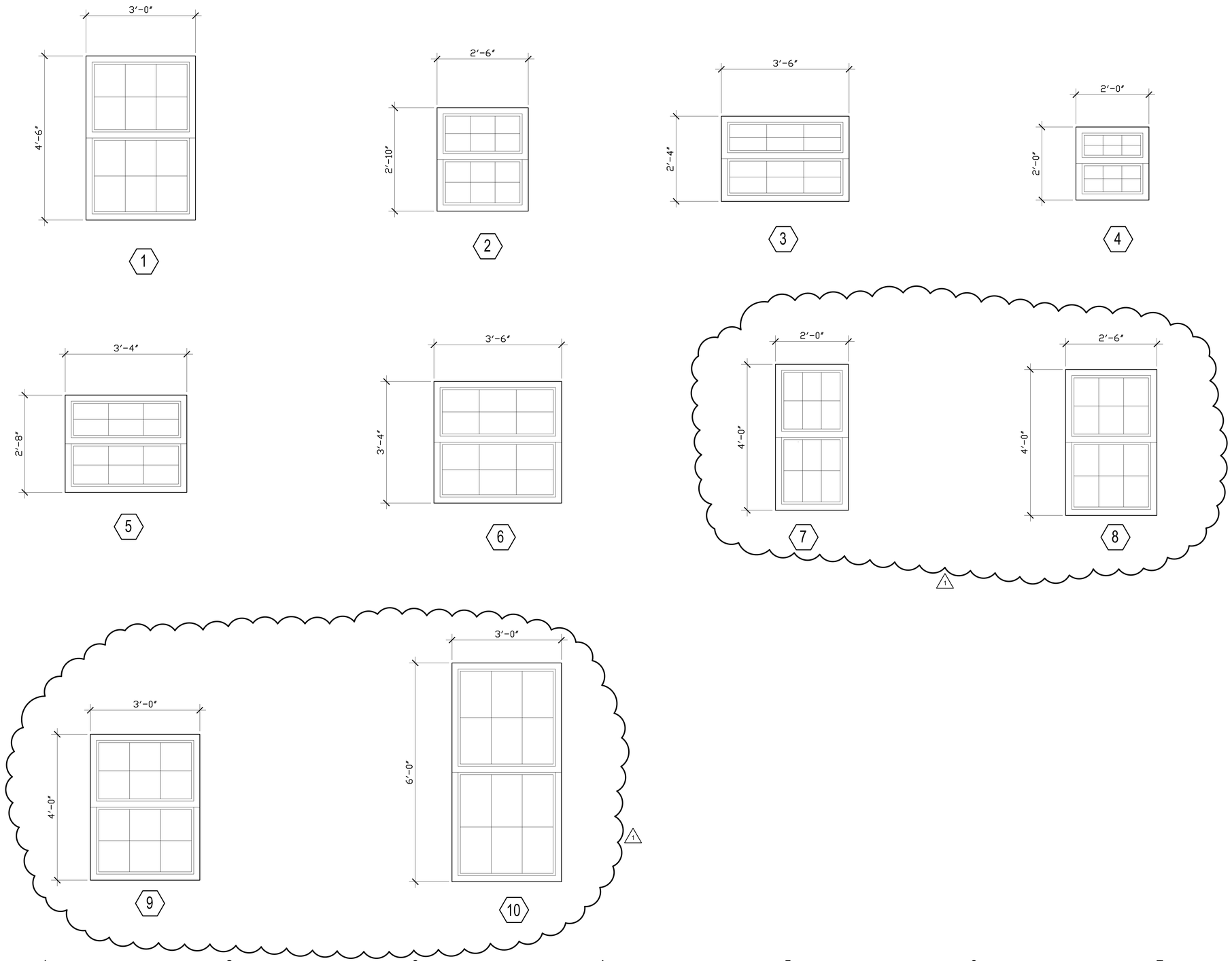

REVISIONS		
NO:	DATE:	REMARKS
1	8-14-14	REVISION NO.1

CONSULTANTS

Jaredian Design Group
Architects, Engineers, Construction Managers
No.33 Dronningens Gade - Queen's Quarter
Post Office Box 6218
St. Thomas, U.S. Virgin Islands 00804
telephone: 340.777.1600 fax: 340.777.1601
e-mail: jaredian2@vipowernet.net

THESE PLANS AND THE DESIGNS CONTAINED HEREIN ARE THE SOLE PROPERTY OF JAREDIAN DESIGN GROUP. THESE PLANS MAY NOT BE REPRODUCED WITHOUT THE WRITTEN PERMISSION OF JAREDIAN DESIGN GROUP. UNAUTHORIZED USE SHALL INVITE A CLAIM FOR COMPENSATION. THE USE BY ANY PERSON OR FIRM OF THESE PLANS OR ANY PART THEREOF SHALL NOT IN ANY WAY SUBJECT JAREDIAN DESIGN GROUP TO ANY COST OR DAMAGES FOR ANY ERROR OR OMISSION CONTAINED THEREIN.

PHASE II RENOVATION TO
PARCEL NO 19A & 20
KONGENS GADE
KINGS QUARTER
ST. THOMAS,
U.S.V.I. 00802-5858

DATE: 12-2-15
DRAWN BY: R.O.P
CHECKED BY: J.P.W.
APPROVED BY: J.P.W.

PROJECT NO: 13-002
CONTRACT NO:

SHEET NO:
A4.1

WINDOW ELEVATIONS

REGISTERED ARCHITECT
U.S. VIRGIN ISLANDS

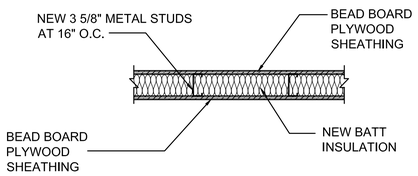

1 WALL DETAIL TYPE W1

A5.0 | A5.0 SCALE: 1"=1'-0"

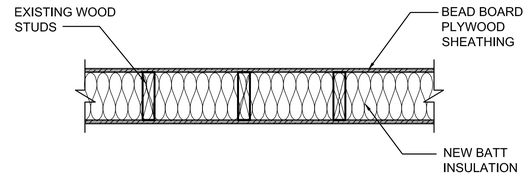

2 WALL DETAIL TYPE W2

A5.0 | A5.0 SCALE: 1"=1'-0"

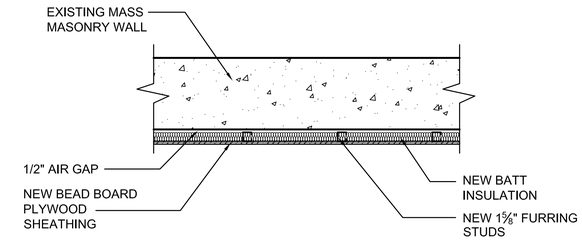

3 WALL DETAIL TYPE W3

A5.0 | A5.0 SCALE: 1"=1'-0"

NOTE:

NEW 5/8" MOISTURE AND MOLD RESISTANT GYPSUM BOARD SHEATHING SHALL BE USED FOR THE INTERIOR WALLS OF THE RESTROOM

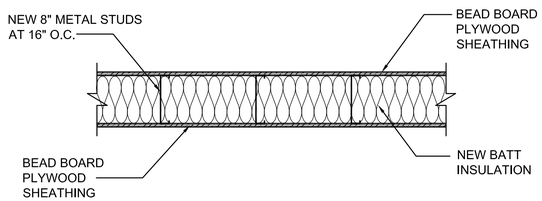

4 WALL DETAIL TYPE W2

A5.0 | A5.0 SCALE: 1"=1'-0"

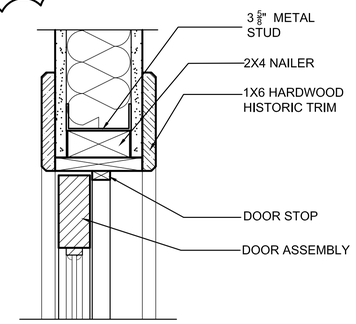

5 DOOR HEADER DETAIL

A5.0 | A5.0 SCALE: 3"=1'-0"

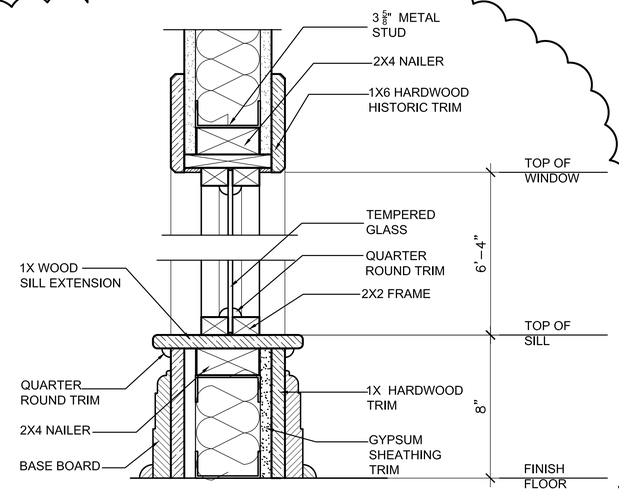

6 WINDOW HEAD AND SILL DETAIL

A5.0 | A5.0 SCALE: 3"=1'-0"

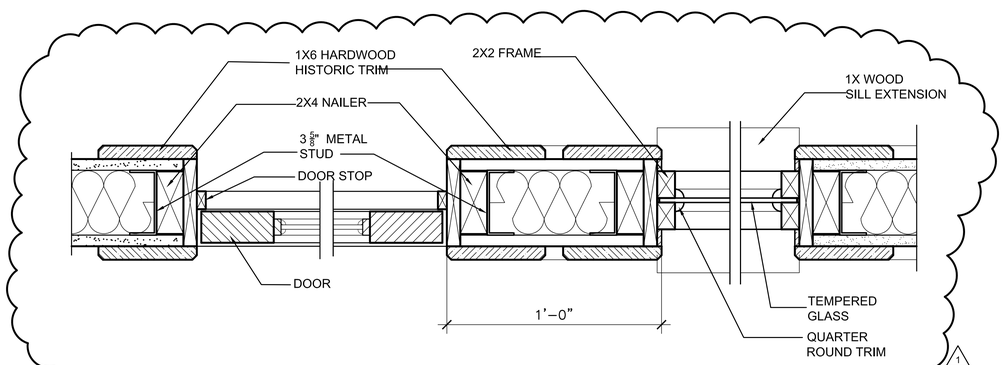

7 DOOR AND WINDOW JAMB DETAIL

A5.0 | A5.0 SCALE: 3"=1'-0"

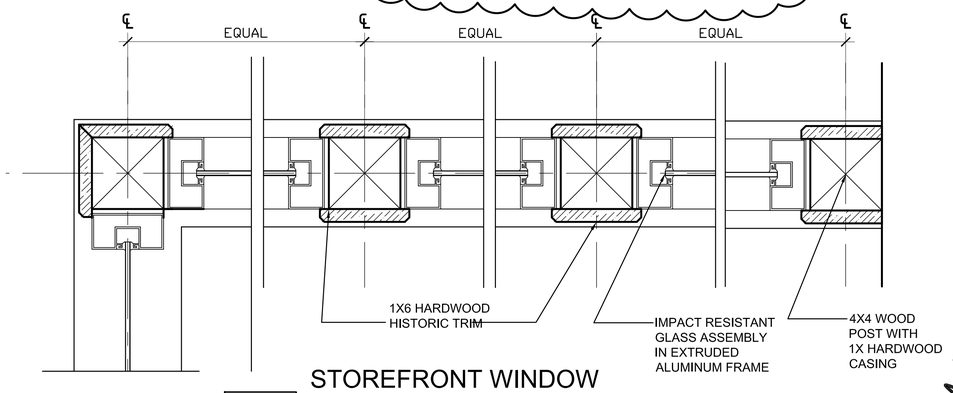

8 STOREFRONT WINDOW JAMB DETAIL

A5.0 | A5.0 SCALE: 3"=1'-0"

REVISIONS		
NO:	DATE:	REMARKS
1	8-14-14	REVISION NO.1

CONSULTANTS

Jaredian Design Group
Architects, Engineers, Construction Managers
No.33 Dronningens Gade - Queen's Quarter
Post Office Box 6218
St. Thomas, U.S. Virgin Islands 00804
telephone: 340.777.1600 fax: 340.777.1601
e-mail: jaredian2@vipowernet.net

THESE PLANS AND THE DESIGNS CONTAINED HEREIN ARE THE SOLE PROPERTY OF JAREDIAN DESIGN GROUP. THESE PLANS MAY NOT BE REPRODUCED WITHOUT THE WRITTEN PERMISSION OF JAREDIAN DESIGN GROUP. UNAUTHORIZED USE SHALL INVITE A CLAIM FOR COMPENSATION. THE USE BY ANY PERSON OR FIRM OF THESE PLANS OR ANY PART THEREOF SHALL NOT IN ANY WAY SUBJECT JAREDIAN DESIGN GROUP TO ANY COST OR DAMAGES FOR ANY ERROR OR OMISSION CONTAINED THEREIN.

PHASE II RENOVATION TO
PARCEL NO 19A & 20
KONGENS GADE
KINGS QUARTER
ST. THOMAS,
U.S.V.I. 00802-5858

DATE: 12-2-15
DRAWN BY: R.O.P
CHECKED BY: J.P.W.
APPROVED BY: J.P.W.

PROJECT NO: 13-002
CONTRACT NO:

SHEET NO: A5.0
WALL DETAILS

REGISTERED ARCHITECT U.S. VIRGIN ISLANDS

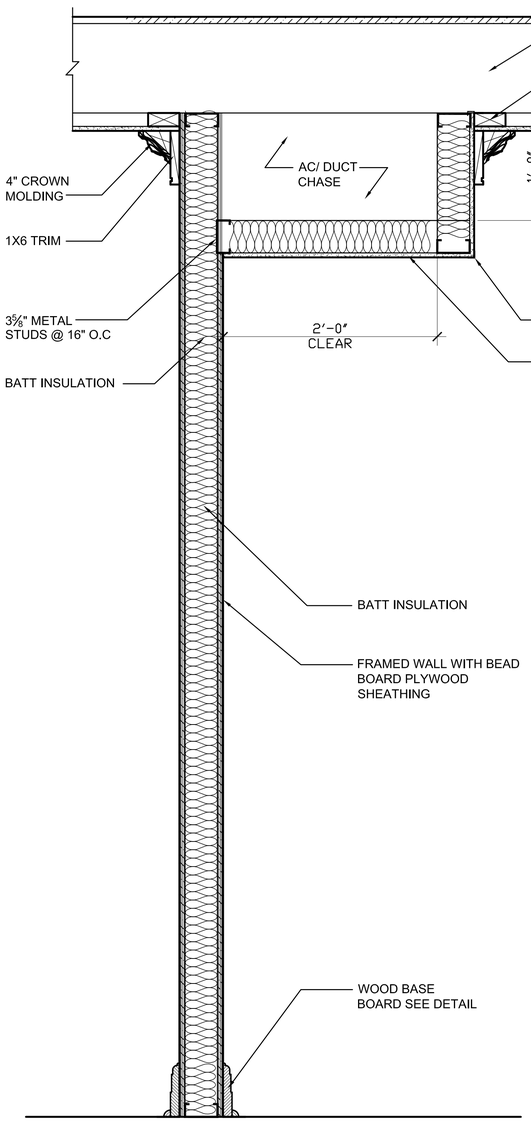

1 WALL SECTION
A5.1 A5.1 SCALE: 1 1/2"=1'-0"

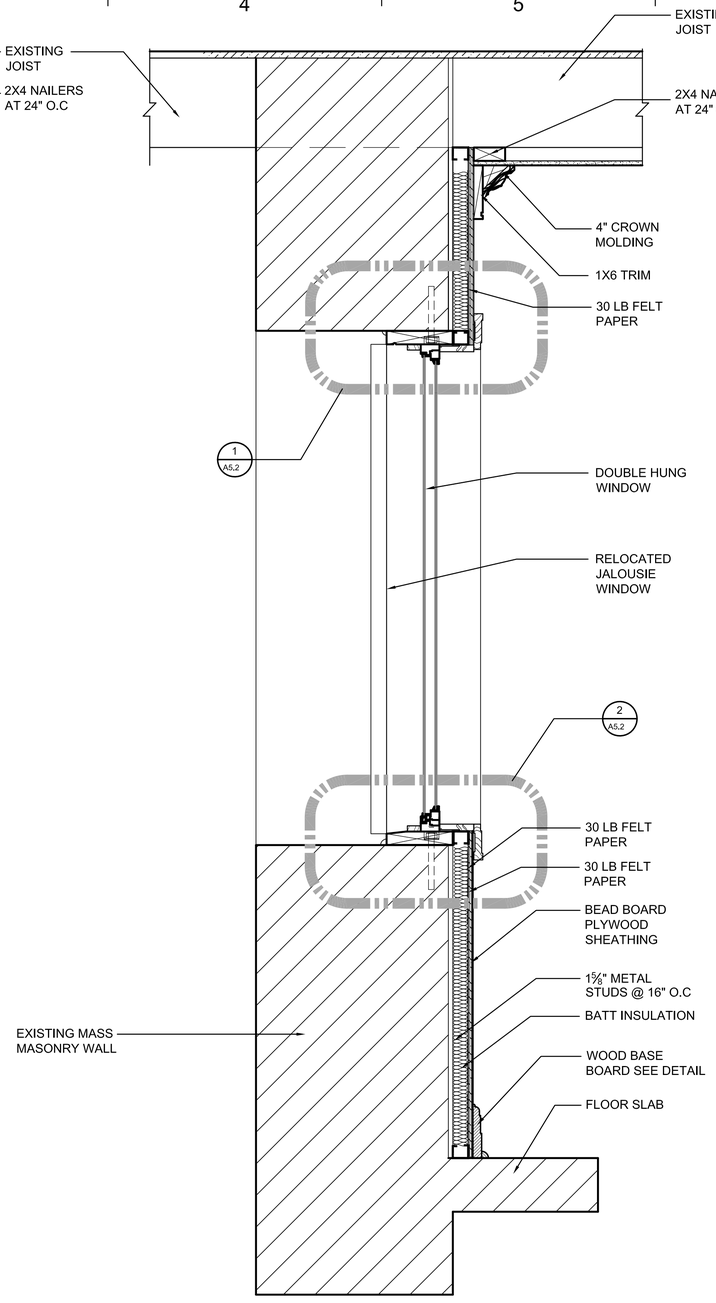

2 WALL SECTION
A5.1 A5.1 SCALE: 1 1/2"=1'-0"

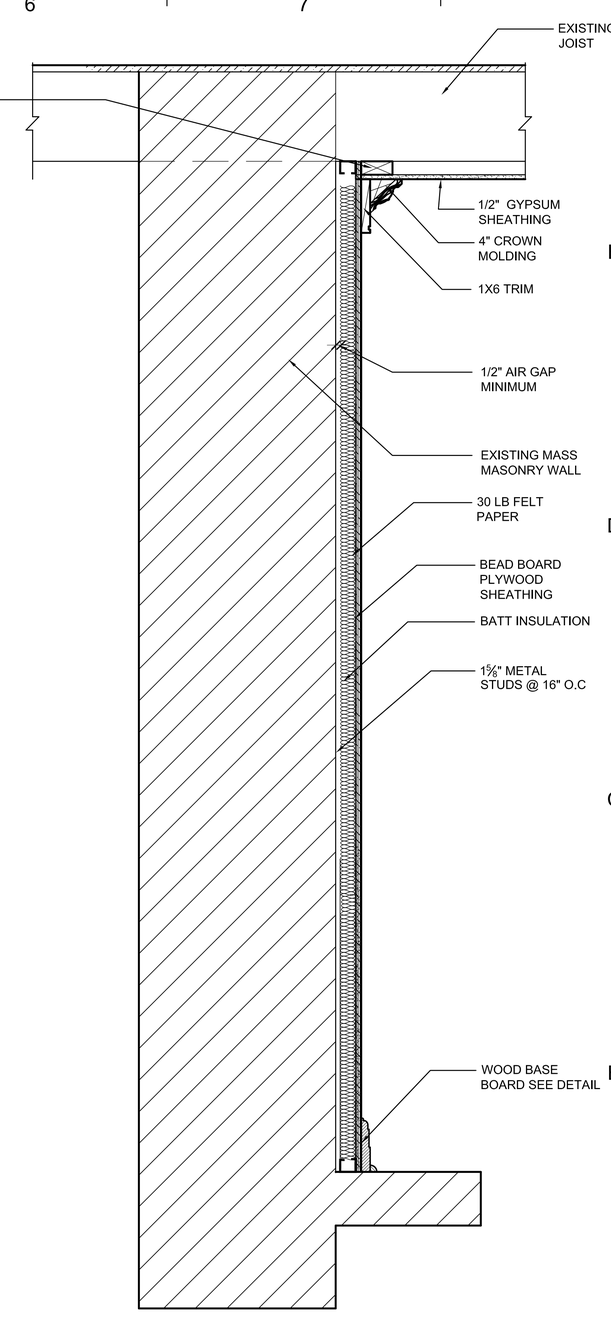

3 WALL SECTION
A5.1 A5.1 SCALE: 11/2"=1'-0"

REVISIONS		
NO:	DATE:	REMARKS
1	8-14-14	REVISION NO.1

CONSULTANTS

Jaredian Design Group
Architects, Engineers, Construction Managers
No.33 Dronningens Gade - Queen's Quarter
Post Office Box 6218
St. Thomas, U.S. Virgin Islands 00804
telephone: 340.777.1600 fax: 340.777.1601
e-mail: jaredian2@vipowernet.net

THESE PLANS AND THE DESIGNS CONTAINED HEREIN ARE THE SOLE PROPERTY OF JAREDIAN DESIGN GROUP. THESE PLANS MAY NOT BE REPRODUCED WITHOUT THE WRITTEN PERMISSION OF JAREDIAN DESIGN GROUP. UNAUTHORIZED USE SHALL INVITE A CLAIM FOR COMPENSATION. THE USE BY ANY PERSON OR FIRM OF THESE PLANS OR ANY PART THEREOF SHALL NOT IN ANY WAY SUBJECT JAREDIAN DESIGN GROUP TO ANY COST OR DAMAGES FOR ANY ERROR OR OMISSION CONTAINED THEREIN.

PHASE II RENOVATION TO
PARCEL NO 19A & 20
KONGENS GADE
KINGS QUARTER
ST. THOMAS,
U.S.V.I. 00802-5858

DATE: 12-2-15
DRAWN BY: KRB
CHECKED BY: J.P.W.
APPROVED BY: J.P.W.

PROJECT NO.: 13-002
CONTRACT NO.:

SHEET NO.:
A5.1
DETAILS

REGISTERED ARCHITECT
U.S. VIRGIN ISLANDS

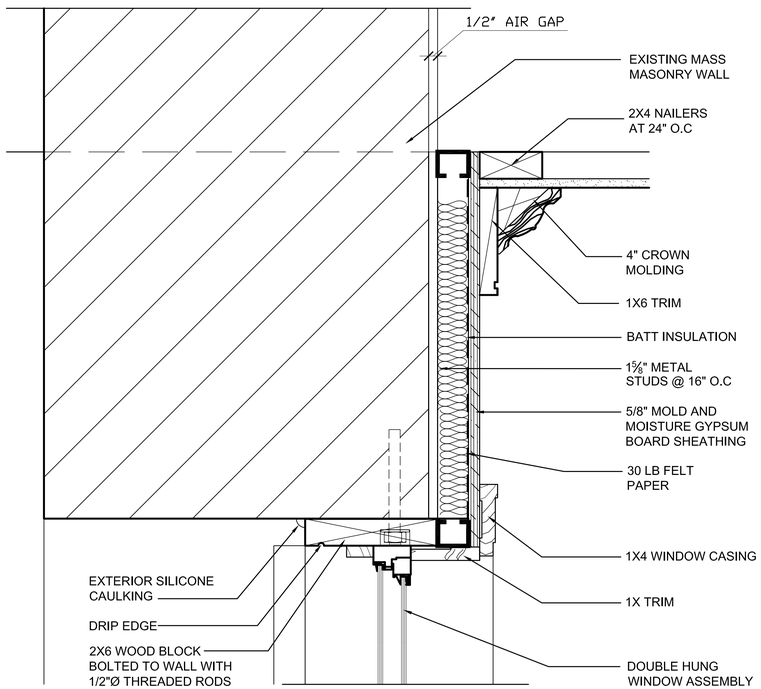

1 HEADER DETAIL

A5.2 | A5.2 SCALE: 3"=1'-0"

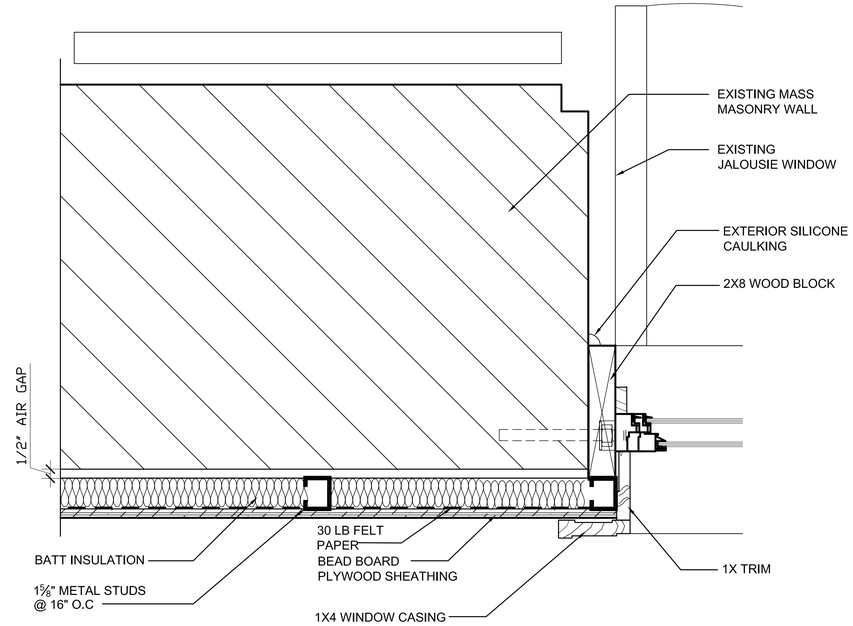

3 JAMB DETAIL

A5.2 | A5.2 SCALE: 3"=1'-0"

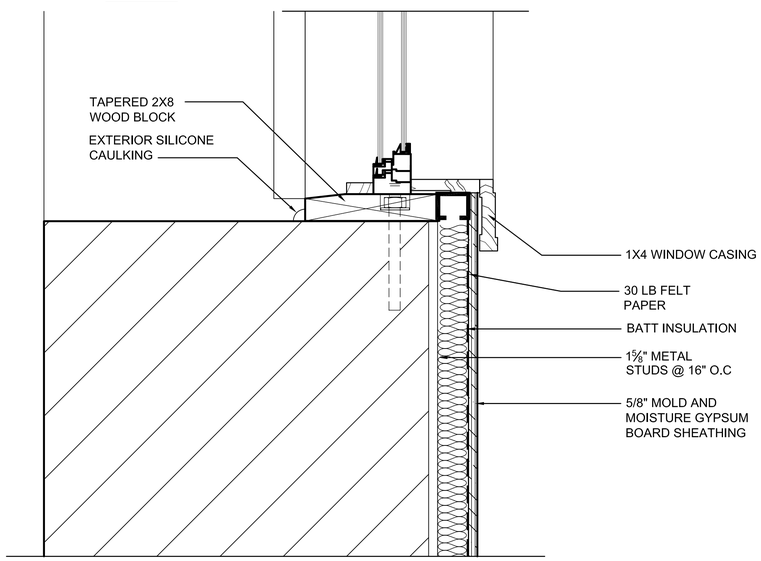

2 SILL DETAIL

A5.2 | A5.2 SCALE: 3"=1'-0"

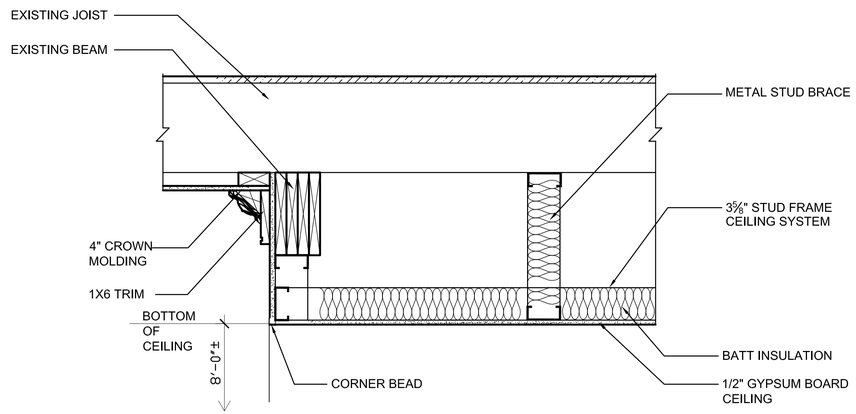

4 BULKHEAD DETAIL

A5.2 | A5.2 SCALE: 3"=1'-0"

NOTE:

1. CONTRACTOR SHALL CENTER NEW WINDOW ASSEMBLY IN EXISTING OPENING. THEY SHALL PROVIDE ALL MISCELLANEOUS TRIM, SHIM ETC TO ENSURE WINDOW IS ADEQUATELY SEALED AND CASED.
2. CONTRACTOR SHALL RELOCATE EXISTING JALOUSIE WINDOWS TO THE EXTERIOR OF THE NEW WINDOWS.
3. THE CONTRACTOR SHALL REMOVE ALL LOOSE PLASTER FROM WALLS ,SEAL THE WALL, AND THEN PROVIDE A LIME PLASTER SCRATCH COAT ON EXISTING MASS MASONRY RUBBLE WALLS.

REVISIONS

NO:	DATE:	REMARKS
1	8-14-14	REVISION NO.1

CONSULTANTS

Jaredian Design Group
Architects, Engineers, Construction Managers
No.33 Dronningens Gade - Queen's Quarter
Post Office Box 6218
St. Thomas, U.S. Virgin Islands 00804
telephone: 340.777.1600 fax: 340.777.1601
e-mail: jaredian2@vipowernet.net

THESE PLANS AND THE DESIGNS CONTAINED HEREIN ARE THE SOLE PROPERTY OF JAREDIAN DESIGN GROUP. THESE PLANS MAY NOT BE REPRODUCED WITHOUT THE WRITTEN PERMISSION OF JAREDIAN DESIGN GROUP. UNAUTHORIZED USE SHALL INVITE A CLAIM FOR COMPENSATION. THE USE BY ANY PERSON OR FIRM OF THESE PLANS OR ANY PART THEREOF SHALL NOT IN ANY WAY SUBJECT JAREDIAN DESIGN GROUP TO ANY COST OR DAMAGES FOR ANY ERROR OR OMISSION CONTAINED THEREIN.

PHASE II RENOVATION TO
PARCEL NO 19A & 20
KONGENS GADE
KINGS QUARTER
ST. THOMAS,
U.S.V.I. 00802-5858

DATE: 12-2-15
DRAWN BY: KRB
CHECKED BY: J.P.W.
APPROVED BY: J.P.W.

PROJECT NO: 13-002
CONTRACT NO:

SHEET NO:
A5.2
DETAILS

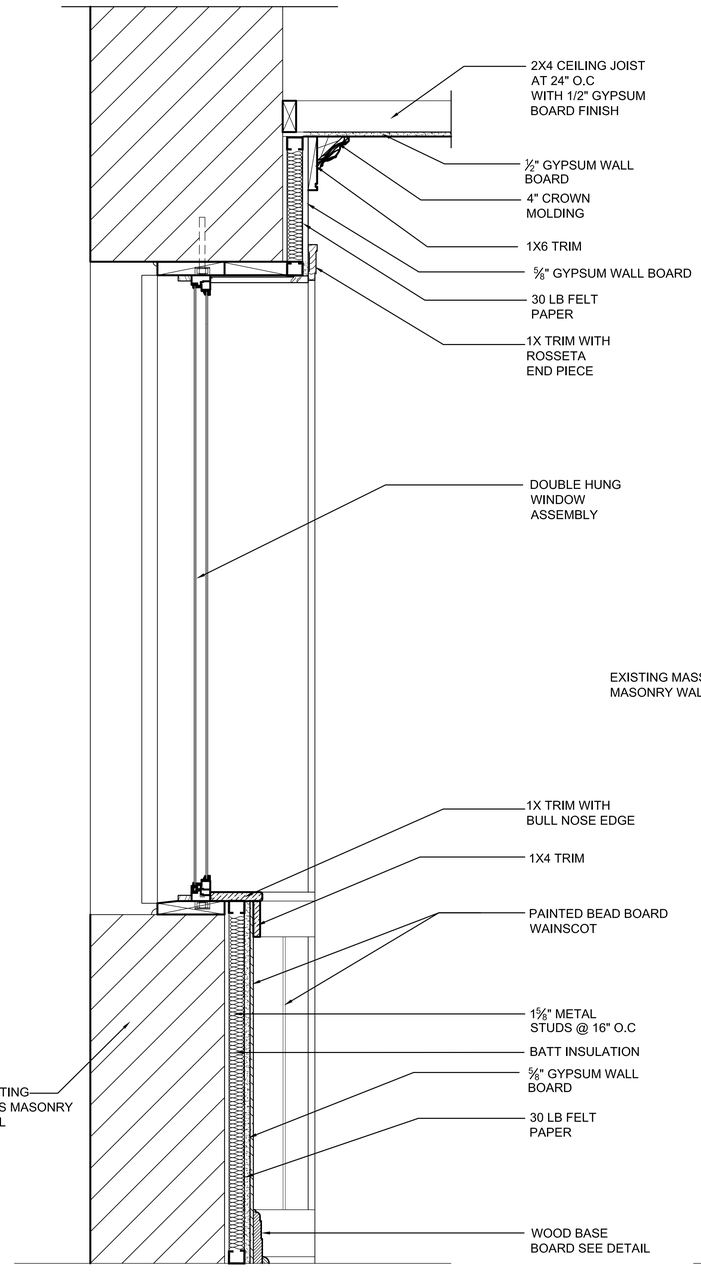

1 WALL SECTION

A5.3 | A5.3 SCALE: 1 1/2"=1'-0"

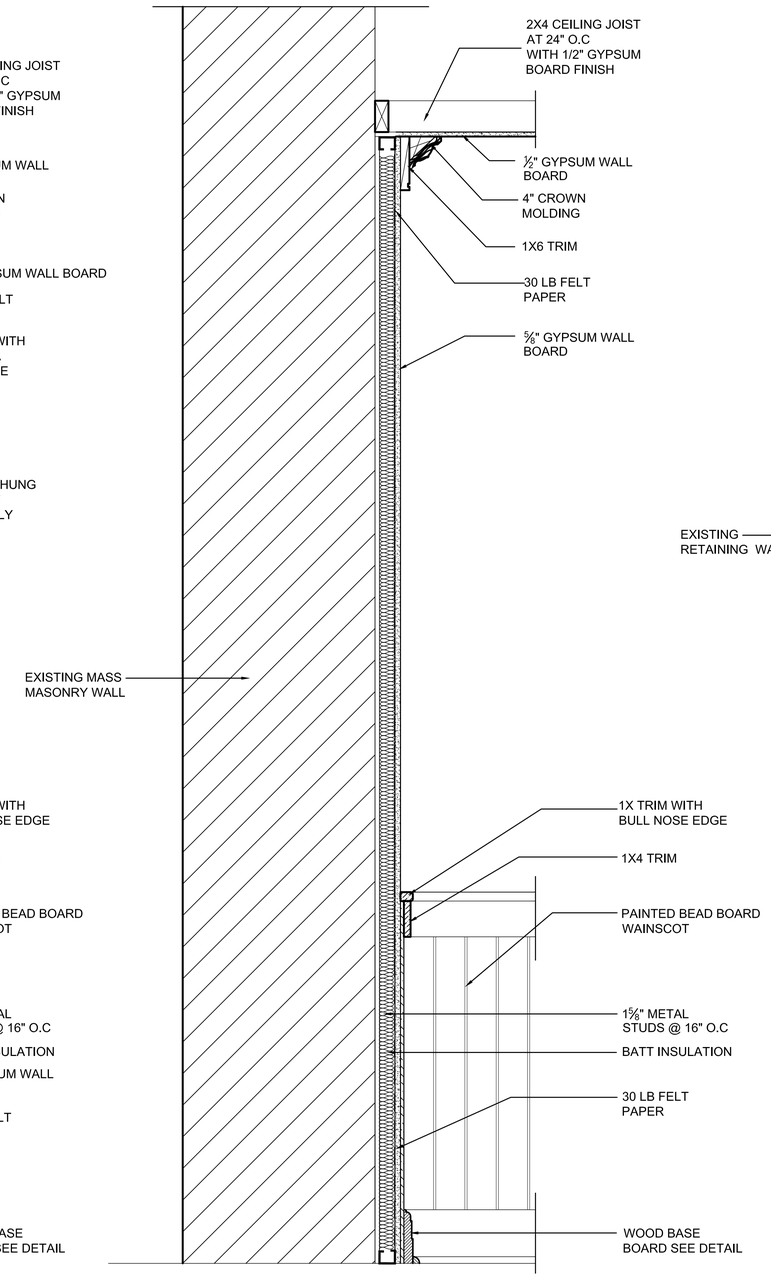

2 WALL SECTION

A5.3 | A5.3 SCALE: 1 1/2"=1'-0"

NOTE:

1. CONTRACTOR SHALL CENTER NEW WINDOW ASSEMBLY IN EXISTING OPENING. THEY SHALL PROVIDE ALL MISCELLANEOUS TRIM, SHIM ETC TO ENSURE WINDOW IS ADEQUATELY SEALED AND CASED.
2. CONTRACTOR IS RESPONSIBLE FOR NEW WOOD TRIM,WINDOW BUCKS AS THEY WERE REMOVED UNDER PREVIOUS CONTRACT.
3. THE CONTRACTOR SHALL REMOVE ALL LOOSE PLASTER FROM WALLS ,SEAL THE WALL, AND THEN PROVIDE A LIME PLASTER SCRATCH COAT ON EXISTING MASS MASONRY RUBBLE WALLS.

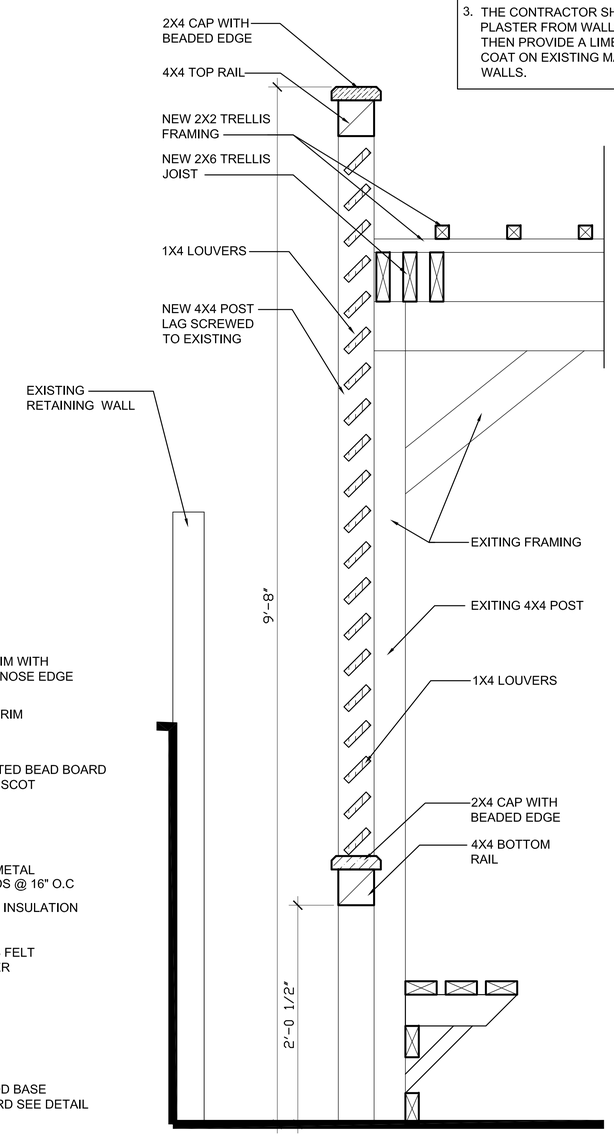

3 PRIVACY WALL EXTENSION

A5.3 | A5.3 SCALE: 1 1/2"=1'-0"

REVISIONS		
NO:	DATE:	REMARKS

CONSULTANTS

Jaredian Design Group
Architects, Engineers, Construction Managers
No.33 Dronningens Gade - Queen's Quarter
Post Office Box 6218
St. Thomas, U.S. Virgin Islands 00804
telephone: 340.777.1600 fax: 340.777.1601
e-mail: jaredian2@vipowernet.net

THESE PLANS AND THE DESIGNS CONTAINED HEREIN ARE THE SOLE PROPERTY OF JAREDIAN DESIGN GROUP. THESE PLANS MAY NOT BE REPRODUCED WITHOUT THE WRITTEN PERMISSION OF JAREDIAN DESIGN GROUP. UNAUTHORIZED USE SHALL INVITE A CLAIM FOR COMPENSATION. THE USE BY ANY PERSON OR FIRM OF THESE PLANS OR ANY PART THEREOF SHALL NOT IN ANY WAY SUBJECT JAREDIAN DESIGN GROUP TO ANY COST OR DAMAGES FOR ANY ERROR OR OMISSION CONTAINED THEREIN.

PHASE II RENOVATION TO
PARCEL NO 19A & 20
KONGENS GADE
KINGS QUARTER
ST. THOMAS,
U.S.V.I. 00802-5858

DATE: 12-2-15
DRAWN BY: R.O.P
CHECKED BY: J.P.W.
APPROVED BY: J.P.W.

PROJECT NO: 13-002
CONTRACT NO:

SHEET NO:
A5.3
DETAILS

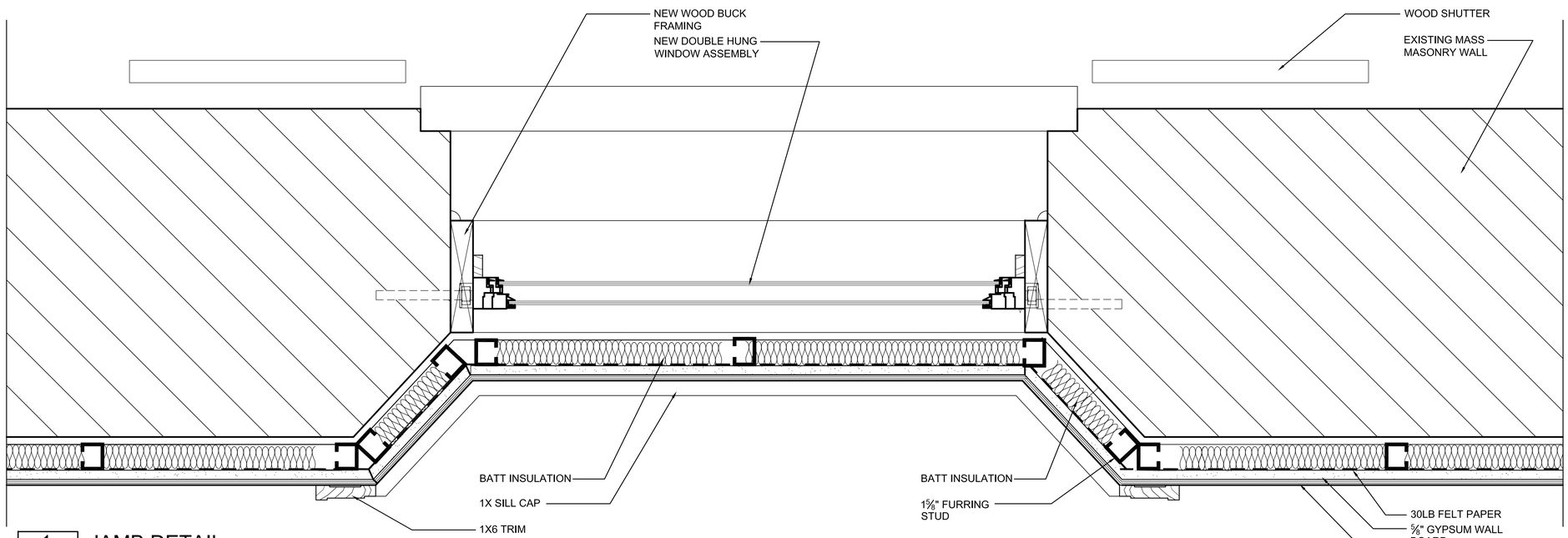

1 JAMB DETAIL

A5.4 | A5.4 SCALE: 3"=1'-0"

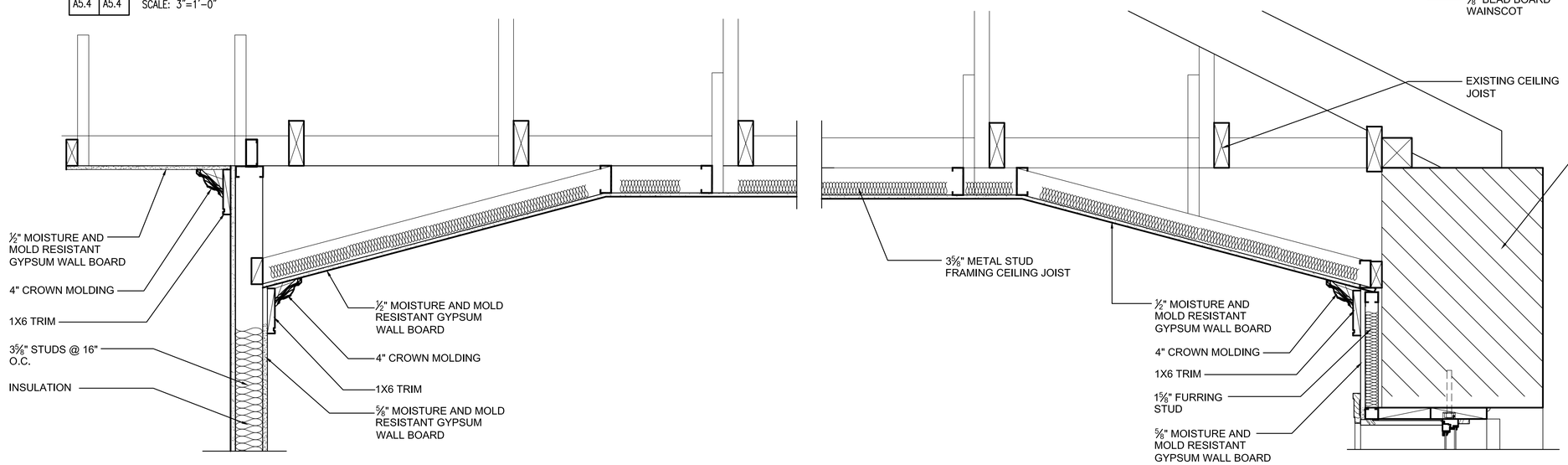

NOTE:
CONTRACTOR MAY USE 2X4 PRESSURE TREATED WOOD FOR CEILING FRAMING IN LIEU OF METAL STUDS.

2 TRAY CEILING DETAIL

A5.4 | A5.4 SCALE: 3"=1'-0"

REVISIONS

NO:	DATE:	REMARKS

CONSULTANTS

Jaredian Design Group
Architects, Engineers, Construction Managers
No.33 Dronningens Gade - Queen's Quarter
Post Office Box 6218
St. Thomas, U.S. Virgin Islands 00804
telephone: 340.777.1600 fax: 340.777.1601
e-mail: jaredian2@vipowernet.net

THESE PLANS AND THE DESIGNS CONTAINED HEREIN ARE THE SOLE PROPERTY OF JAREDIAN DESIGN GROUP. THESE PLANS MAY NOT BE REPRODUCED WITHOUT THE WRITTEN PERMISSION OF JAREDIAN DESIGN GROUP. UNAUTHORIZED USE SHALL INVITE A CLAIM FOR COMPENSATION. THE USE BY ANY PERSON OR FIRM OF THESE PLANS OR ANY PART THEREOF SHALL NOT IN ANY WAY SUBJECT JAREDIAN DESIGN GROUP TO ANY COST OR DAMAGES FOR ANY ERROR OR OMISSION CONTAINED THEREIN.

PHASE II RENOVATION TO
PARCEL NO 19A & 20
KONGENS GADE
KINGS QUARTER
ST. THOMAS,
U.S.V.I. 00802-5858

DATE: 12-2-15
DRAWN BY: K.R.B
CHECKED BY: J.P.W.
APPROVED BY: J.P.W.

PROJECT NO.: 13-002
CONTRACT NO.:

SHEET NO.:
A5.4
DETAILS

REGISTERED ARCHITECT
U.S. VIRGIN ISLANDS

HVAC GENERAL NOTES

1. THE WORK THAT IS TO BE DONE UNDER THIS HEADING INCLUDES THE FURNISHING OF ALL LABOR, MATERIALS AND EQUIPMENT, PERMITS, FEES, INSPECTIONS,TESTS, INSURANCE, ETC. REQUIRED FOR THE OMPLETION OF THE AIR CONDITIONING SYSTEM SHOWN ON DRAWINGS AND/OR LISTED BELOW.

2. CONTRACTOR SHALL VERIFY SPACE CONDITIONS AND DIMENSIONS AND SHALL COORDINATE WORK WITH ALL OTHER TRADES AT JOBSITE PRIOR TO FABRICATION AND INSTALLATION OF DUCTWORK.

3. ALL WORK SHALL BE COORDINATED WITH OTHER TRADES TO AVOID INTERFERENCE WITH PROGRESS OF CONSTRUCTION AND IN STRICT COMPLIANCE WITH ALL APPLICABLE CODES AND STANDARDS.

4. ALL WORK SHALL BE DONE IN ACCORDANCE WITH THE LATEST EDITION OF THE INTERNATIONAL BUILDING CODE AND ALL LOCAL CODES AND ORDINANCES.

5. WARRANTY

   1. FULLY WARRANT ALL MATERIALS, EQUIPMENT AND WORKMANSHIP FOR ONE (1) YEAR FROM DATE OF ACCEPTANCE.
   2. EXTEND ALL MANUFACTURER'S WARRANTIES TO OWNER, INCLUDING EXTENDED WARRANTIES ON HVAC EQUIPMENT. FIVE (5) YEAR COMPRESSOR (MATERIAL ONLY).

6. CONTRACTOR SHALL COORDINATE ALL BUILDING STANDARD REQUIREMENTS PRIOR TO BID.

7. SUBMIT SHOP DRAWINGS OF ALL MATERIALS AND EQUIPMENT FOR APPROVAL PRIOR TO FABRICATION.

8. ALL DUCT SIZES SHOWN ON DRAWINGS ARE CLEAR INSIDE DIMENSIONS.

9. AIR DISTRIBUTION SHALL BE AS SCHEDULED ON THE DRAWINGS OR APPROVED EQUAL.

10. DUCTWORK

    1. FABRICATE AND ERECT ALL DUCTWORK IN ACCORDANCE TO ASHRAE AND SMACNA HVAC DUCT CONSTRUCTION STANDARDS (METAL AND FLEXIBLE) AND SMACNA FIBROUS GLASS DUCT CONSTRUCTION STANDARDS. COMPLY WITH NFPA BULLETIN 90A REQUIREMENTS.

    2. SHEETMETAL DUCTWORK AND FITTINGS SHALL BE SMACNA LOW PRESSURE CONSTRUCTION WITH SEAL CLASS B SEAMS AND JOINTS. INCLUDE DOUBLE-THICKNESS TURNING VANES, MANUAL DAMPERS, FLEXIBLE CONNECTORS, ACOUSTIC LINING, AND OTHER SHEET METAL ACCESSORIES FOR THE PROJECT. VOLUME DAMPERS TO BE OF OPPOSED BLADE CONSTRUCTION. ALL BRANCH CONNECTION SHEETMETAL RECTANGULAR DUCTWORK SHALL BE 45 DEGREE TAP TAKE-OFF FITTINGS.

    3. FIBERGLASS DUCTWORK AND FITTINGS SHALL BE FABRICATED OF 1-1/2" INCH THICK STANDARD DUTY FIBERGLASS BOARD WITH REINFORCED FLAMEPROOF ALUMINUM FOIL FACED COVERING. MIN. R-VALUE 6.0. ALL 90 DEGREE ELBOWS SHALL BE MULTIGORE OR VANED MITERED ELBOWS.

    4. FLEXIBLE DUCTS SHALL BE INDEPENDENTLY SUPPORTED FROM THE STRUCTURE AND CONNECTED WITH PLASTIC DRAW BANDS TIGHTENED WITH MANUFACTURER'S TOOLS. TAKE-OFFS FROM RIGID DUCTWORK TO BE SPIN-IN FITTINGS PROVIDED WITH TWIST RINGS, BUTTERFLY DAMPERS, QUADRANT OPERATORS AND INSULATION GUARD. FLEXIBLE DUCTS SHALL BE LIMITED TO A MAXIMUM OF 10'-0" STRAIGHT LENGTHS PER RUNOUT. FLEXIBLE DUCTS SHALL BE ATCO RUBBER 070 OR EQUAL, 1-1/2" THICK INSULATION WITH A MIN. R-VALUE OF 6.0 AND RATED AT 10" W.C. FOR SIZES THROUGH 12". FLEXIBLE DUCTS SHALL BE U.L. LISTED AND MEET 25/50 FLAME AND SMOKE TEST IN ACCORDANCE WITH NFPA 255. FLEXIBLE DUCTS ARE NOT PERMITTED IN ROOMS WITHOUT CEILINGS.

    5. ALL EXPOSED VENTILATION DUCTWORK AND FITINGS SHALL BE GALVANIZED SPIRAL SHEETMETAL CONSTRUCTION.

    6. ALL AIR CONDITIONING DUCTWORK AND FITTINGS CONCEALED SPACES SHALL BE OF FIBERGLASS CONSTRUCTION.

    7. ALL EXPOSED SUPPLY AIR CONDITIONING DUCTWORK AND FITTINGS SHALL BE ZINC COATED ROUND SPIRAL CONDUIT MANUFACTURED BY UNITED SHEET METAL, SEMCO OR APPROVED EQUAL.

11. CHECK, TEST, START, ADJUST, BALANCE AND INSTRUCTIONS

    1. AFTER INSTALLATION, SERVICING AND EQUIPMENT IS OPERATIONAL, CHECK ALL EQUIPMENT AND PERFORM START UP IN ACCORDANCE WITH THE MANUFACTURER'S INSTRUCTIONS.

    2. PRESSURE TEST ALL REFRIGERANT HIGH SIDE PIPING TO 275 PSIG, HOLD FOR 25 HOURS. LOW SIDE TO 150 PSIG, HOLD FOR 24 HOURS. AFTER TESTING, EVACUATE SYSTEM TO 28 INCHES OF MERCURY GAUGE PRESSURE WITH VACUUM PUMP. HOLD FOR 24 HOURS WITH PUMP OFF. BREAK VACUUM WITH OPERATING REFRIGERANT.

    3. BALANCE AIR SYSTEM TO DELIVER AIR QUANTITIES AT EACH OUTLET WITHIN 10% USING AABC TESTS AND PROCEDURES.

    4. TAG ALL EQUIPMENT, SWITCHES AND CONTROLS WITH PERMANENT LABELS.

12. REFRIGERANT PIPING SHALL BE TYPE L HARD OR SOFT DRAWN, COPPER TUBING, CLEANED AND DEHYDRATED FOR REFRIGERANT USE. SIZES AS PER AIR CONDITIONING EQUIPMENT MANUFACTURER'S RECOMMENDATIONS. REFRIGERANT SUCTION PIPING SHALL BE INSULATED WITH 1/2" THICK FOAMED RUBBER INSULATION, FIRE RETARDANT TYPE. INSULATION SHALL BE INSTALLED ON PIPING BEFORE ASSEMBLY. NO SPLIT INSULATION WILL BE ACCEPTABLE. SEAL JOINTS IN ACCORDANCE WITH MANUFACTURER'S RECOMMENDATIONS.

13. CONDENSATE PIPING SHALL BE PVC. PIPING ABOVE GRADE SHALL BE INSULATED WITH $\frac{3}{4}$" THICK FOAMED RUBBER INSULATION.

DEMOLITION NOTES

REMOVE EXISTING RECEPTACLES, TELEPHONE, SWITCHES, LIGHTING FIXTURES AND ANY OTHER ELECTRICAL DEVICES IN WALLS AND OR CEILINGS TO BE DEMOLISHED. RELOCATE ANY OF THESE DEVICES AS INDICATED OR REQUIRED BY THE DRAWINGS. PROVIDE ARCHITECT WITH AS-BUILT DRAWINGS OF FINAL INSTALLATION FOR RECORD PURPOSES. CONTRACTOR IS NOTIFIED THAT NOT ALL EXISTING DEVICES MAY HAVE BEEN INDICATED ON THE DRAWINGS AND THAT SOME EXISTING ELECTRICAL DEVICES MAY NOT HAVE BEEN SHOWN IN THEIR ACTUAL LOCATION. CONTRACTOR IS REQUIRED TO VISIT SITE AND BECOME FAMILIAR WITH THE EXISTING CONDITIONS PRIOR TO DETERMINING THE WORK THAT NEEDS TO BE ACCOMPLISHED AS PART OF HIS/HER BID.

THE WORK SHALL INCLUDE THE FURNISHING OF ALL MATERIALS, CUTTING, EXTENDING, CONNECTING, REPAIRING, ADAPTING, AND OTHER WORK COINCIDENTAL HERETO, TOGETHER WITH SUCH TEMPORARY INSTALLATIONS AS MAY BE NECESSARY TO SATISFY THE DEMOLITION PROGRAM. APPROVAL SHALL BE SECURED FROM THE LANDLORD/ARCHITECT PRIOR TO CUTTING/DRILLING ANY STRUCTURAL SUPPORT.

ALL BUILDING CONSTRUCTION AFFECTED BY THE REMOVAL, RELOCATION, INSTALLATION OF ANY PIECE OF EQUIPMENT SHALL BE REPAIRED AND FINISHED AS REQUIRED TO MATCH EXISTING CONDITIONS OR AS DIRECTED BY THE ARCHITECTURAL DRAWINGS, SPECIFICATIONS, OR OWNER'S REPRESENTATIVE.

WHEN ELECTRICAL DEVICES ARE INSTALLED IN PARTITIONS OR CEILINGS TO BE REMOVED, THE ELECTRICAL CONTRACTOR SHALL DISCONNECT THEM UP TO THE NEXT OUTLET TO REMAIN OR BACK TO THE PANELBOARD. IF EXISTING TO REMAIN OUTLETS ARE FED THROUGH DEMOLISHED PARTITIONS OR CEILINGS, THE CIRCUIT SHALL BE REARRANGED TO MAINTAIN CIRCUIT CONTINUITY. WIRE SHALL BE REMOVED BACK TO SOURCE FROM INACCESSIBLE RACEWAYS NOT REUSED. INSTALL BLANK PLATES ON FLUSH OUTLETS NOT REUSED. PLATE COLOR SHALL MATCH ADJACENT SURFACE AS NEAR AS POSSIBLE IN FINISHED AREAS.

ALL ELECTRICAL EQUIPMENT SHALL BE REMOVED FROM STRUCTURE TO BE REMOVED. ACCESSIBLE RACEWAYS, WIRES, BOXES, SWITCHES, AND OTHER ELECTRICAL ITEMS ASSOCIATED WITH THIS WORK SHALL BE REMOVED IF NOT REQUIRED FOR NEW EQUIPMENT TO CONTINUE IN SERVICE.

ALL MATERIAL REMOVED SHALL BE DISPOSED OF AS DIRECTED BY OWNER.

AIR DISTRIBUTION SCHEDULE

SYM	USE	TYPE	ACCESSORIES	MFR & MODEL NO
"A"	SUPPLY	CEILING DIFFUSER	O.B.D.	TITUS-TDC-AA 12"X12" MODULE
'B'	RETURN	CEILING GRILLE	O.B.D.	TITUS-50F 12"X12" MODULE
'C'	RETURN	DOOR GRILLE	SURFACE MOUNTED AUXILIARY FRAME	TITUS-CT-700L

NOTES:
1. ALL AIR DISTRIBUTION DEVICES SHALL BE OF EXTRUDED ALUMINUM CONSTRUCTION.
2. COORDINATE ALL AIR DISTRIBUTION DEVICES LOCATION WITH ARCHITECT REFLECTED CEILING PLAN.
3. FINISH FOR ALL AIR DISTRIBUTION DEVICES SHALL BE AS SELECTED BY ARCHITECT.

AIR BALANCE SCHEDULE

UNIT NUMBER	SERVICE AREA	SUPPLY AIR	RETURN AIR	OUTSIDE AIR CFM	EXH. CFM	PRESS. CFM
AHU-2-1	TRAINING CONFERENCE	1100	1800	300	150	150
AHU-2-2	SECOND FLOOR OFFICES	2000	1700	300	150	150

OUTDOOR AIR REQUIREMENTS FOR VENTILATION (ASHRAE STANDARD 62.1-2010)

AREA DESIGNATION (OCCUPANCY CATEGORY)	FLOOR AREA S.F. (Az)	OCCUPANCY PEOPLE/1000 S.F. (Pz)	TOTAL PEOPLE PERSONS (Pz)	OUTDOOR AIR RATE, CFM/PERSON (Rp)	AREA OUTDOOR AIR RATE CFM/S.F. (Ra)	O.A. INTAKE FLOW CFM (Vot) = (Voz)	O.A. INTAKE FLOW CFM PROVIDED
AHU-2-1 (TRAINING)	350	---	16	5	0.06	101	300
AHU-2-2 (OFFICES)	1364	---	16	5	0.06	162	300

RELIEF/INTAKE ROOF VENTILATOR SCHEDULE

UNIT DESIGNATION	OAIGV-1
TOTAL AIR, CFM	600
NECK SIZE, INCHES	18
NECK AREA, SQ.FT.	2.25
NECK VELOCITY, MAX. FPM	300
HOOD SIZE, INCHES	36
SERVED	AHU-2-1 & AHU-2-2 O/A
MANUFACTURER	GREENHECK
MODEL No.	GRS1

NOTES:
1. ALL ROOF VENTILATORS SHALL BE PROVIDED WITH 12" ROOF CURB.

AIR CONDITIONING LEGEND

SYMBOL	DESCRIPTION
AHU	AIR HANDLING UNIT
BOTT.	BOTTOM
CD	CEILING DIFFUSER
COND.	CONDENSATE
CONC.	CONCRETE
CFM	CUBIC FEET PER MINUTE
E.F.	EXHAUST FAN
E.R.	EXHAUST REGISTER
F.L.A.	FULL LOAD AMPS
FPM	FEET PER MINUTE
HP	HORSEPOWER
HR	HOUR
IN.	INCH
K.W.	KILOWATT
LBS.	POUNDS
MAX.	MAXIMUM
NO.	NUMBER
O/A	OUTSIDE AIR
RPM.	REVOLUTIONS PER MINUTE
R/A	RETURN AIR
R.G.	RETURN GRILLE
S/A	SUPPLY AIR
SR	SIDEWALL REGISTER
TEMP.	TEMPERATURE
TEF	TOILET EXHAUST FAN
CR	CEILING REGISTER
OBD	OPPOSED BLADED DAMPER
EXH	EXHAUST
F.L.A.	FULL LOAD AMPERS
DB	DRY BULB
WB	WET BULB
BTU/HR	BRITISH THERMAL UNIT/HOUR
T.G.	TRANSFER GRILLE
"A"	AIR DISTRIBUTION DESIGNATION
VFD	VARIABLE FREQUENCY DRIVE
CP	CONTROL PANEL
T	THERMOSTAT
	SUPPLY DUCT SECTION
	EXHAUST, RETURN, OR OUTSIDE AIR DUCT SECTION
FD	MANUAL DAMPER
	FIRE DAMPER W/ SUITABLE ACCESS PANEL
M	MOTORIZED DAMPER
	DUCT MOUNTED RETURN AIR TEMPERATURE SENSOR
	SIDEWALL REGISTER WITH AIR FLOW ARROW
	CEILING DIFFUSER WITH AIR FLOW ARROW
	EXHAUST OR CEILING GRILLE
	ELBOW UP (SUPPLY)
	ELBOW DOWN (SUPPLY)
	90° ELBOW W/TURNING VANES
SD	DUCT MOUNTED SMOKE DETECTOR
UC	UNDER CUT DOOR
T XXX	SECTION A CUT APPEARING ON SHEET 501
EF	CEILING EXHAUST FAN

DESIGN PARAMETERS

SUMMER CONDITIONS			
INSIDE	75° F DB 50% RELATIVE HUMIDITY	OUTSIDE	89° F DB 80° F WB
WINTER CONDITIONS			
INSIDE	70° F DB	OUTSIDE	67° F DB

REVISIONS

NO:	DATE:	REMARKS

CONSULTANTS

Jaredian Design Group
Architects, Engineers, Construction Managers
No.33 Dronningens Gade - Queen's Quarter
Post Office Box 6218
St. Thomas, U.S. Virgin Islands 00804
telephone: 340.777.1600 fax: 340.777.1601
e-mail: jaredian2@vipowernet.net

THESE PLANS AND THE DESIGNS CONTAINED HEREIN ARE THE SOLE PROPERTY OF JAREDIAN DESIGN GROUP. THESE PLANS MAY NOT BE REPRODUCED WITHOUT THE WRITTEN PERMISSION OF JAREDIAN DESIGN GROUP. UNAUTHORIZED USE SHALL INVITE A CLAIM FOR COMPENSATION. THE USE BY ANY PERSON OR FIRM OF THESE PLANS OR ANY PART THEREOF SHALL NOT IN ANY WAY SUBJECT JAREDIAN DESIGN GROUP TO ANY COST OR DAMAGES FOR ANY ERROR OR OMISSION CONTAINED THEREIN.

PHASE II RENOVATION TO
PARCEL NO 19A & 20
KONGENS GADE
KINGS QUARTER
ST. THOMAS,
U.S.V.I. 00802-5858

DATE: 08-08-14
DRAWN BY: L.C
CHECKED BY: J.P.W.
APPROVED BY: J.P.W.

PROJECT NO: 13-002
CONTRACT NO:

SHEET NO:
M0.1
HVAC LEGEND, SCHEDULES & NOTES

REGISTERED ARCHITECT U.S. VIRGIN ISLANDS

AIR COOLED SPLIT A/C UNIT SCHEDULE

AIR HANDLING UNIT		UNIT DESIGNATION	AHU-2-1	AHU-2-2
		AREA SERVED	TRAINING CONFERENCE	SECOND FLOOR OFFICES
		LOCATION	MECHANICAL ROOM	MECHANICAL ROOM
		OPERATING WEIGHT LBS	200	200
		DESIGN MANUFACTURER	TRANE	TRANE
		MODEL NUMBER	GAM2A0C36SS	GAM2A0C60SS
	FAN	TOTAL AIR CFM	1100	2000
		VENTAIR CFM	300	300
		EXTERNAL STATIC PRESSURE IN. OF H2O	0.5	0.5
		FAN MOTOR HP (NON-OVERLOAD)	1	1
		ELECTRICAL SERVICE AVAILABLE	240V-1ø-60Hz	240V-1ø-60Hz
		UNIT MCA/MOCP	7.5/15	7.5/15
	COOLING COIL	DESIGN AIR ACROSS COIL CFM	1100	1800
		GRAND TOTAL CAPACITY BTU/HR	34500	53800
		TOTAL SENSIBLE CAPACITY BTU/HR	26400	40700
		ENTERING AIR TEMP. F DB/WB	80/67	80/67
	FILTER	TYPE AND THICHNESS	MERV 7/2"	MERV 7/2"
	HEAT	COIL TYPE	--	--
		TOTAL HEATING CAPACITY KW	--	--
		No OF HEATING STEPS	--	--
AIR COOLED CONDENSING UNIT		UNIT DESIGNATION	CU-2-1	CU-2-2
		TOTAL CAPACITY BTU/HR	--	--
		TYPE OF FAN	PROPELLER	PROPELLER
		No OF FANS / FLA	1/1.4	1/1.2
		AMBIENT AIR TEMP. F DB °	95	95
		CONDENSING TEMP. F DB °	110	110
		No OF COMPRESSORS	1	1
		COMPRESSOR RPM MAX	3,500	3,500
		CAPACITY REDUCTION	100	100
		COMPRESSOR FLA	15.3	21.4
		ELECTRICAL SERVICE AVAILABLE	240V-1ø-60Hz	240V-1ø-60Hz
		UNIT MCA/MFS	22/30	35/60
		OPERATING WEIGHT LBS	250	300
		DESIGN MANUFACTURER MODEL No	4TTR3636	4TTR6060
		SEER (MINIMUM)	14.0	14.0
		REFRIGERANT	R-410A	R-410A

NOTES:

1. REFRIGERANT LINES SHALL BE INSTALLED AND SIZED IN STRICT ACCORDANCE TO INSTALLED EQUIPMENT MANUFACTURER'S LONG-LINE APPLICATION GUIDE. CONTRACTOR SHALL CONSULT INSTALLED MANUFACTURER'S LONG-LINE APPLICATION GUIDE LINE. INSTALLING CONTRACTOR SHALL BE RESPONSIBLE FOR PROPER REFRIGERANT LINE SIZING AND ACTUAL DEVELOPED LENGTHS.
2. ALL AIR HANDLING UNITS SHALL BE PROVIDED WITH A FLOAT SWITCH ("WET SWITCH") WIRED TO SHUT DOWN UNIT UPON FAILURE OF PRIMARY CONDENSATE DRAIN AND/OR OVERFLOW.
3. 5 YEARS COMPRESSOR WARRANTY.
4. SYSTEMS SHALL BE PROVIDED WITH 7-DAY, COOL PROGRAMMABLE THERMOSTATS.
5. CONDENSING UNIT COIL SHALL BE PROVIDED WITH COATING PROTECTION.

VENTILATION FAN SCHEDULE

	UNIT DESIGNATION	EF-2-1 & EF-2-2	EF-2-3	EF-2-4
	AREA SERVED	SECOND FLOOR REST ROOMS	SECOND FLOOR COPIER ROOM	SECOND FLOOR STORAGE ROOM
	OPERATING WEIGHT LBS.	30	60	30
	FAN INTERLOCK	SWITCH	SWITCH	SWITCH
	LOCATION	CEILING	CEILING	CEILING
	FAN TYPE	CEILING	CEILING	CEILING
FAN	TOTAL AIR, CFM	75	150	75
	DRIVE TYPE	DIRECT	DIRECT	DIRECT
	FAN WHEEL TYPE	CENTRIF.	CENTRIF.	CENTRIF.
	FAN TIP SPEED, RPM MAX	--	--	--
	FAN SPEED, RPM	925	711	925
	TOTAL STATIC PRESSURE, IN OF H20	0.25	0.25	0.25
	FAN MOTOR HP (NON OVERLOAD)	7 WATTS	240 WATTS	7 WATTS
	FAN MOTOR STARTER TYPE	--	--	--
	STARTER FURNISHED BY	--	--	--
	ELECTRICAL SERVICE AVAILABLE	115V-1ø-60Hz	115V-1ø-60Hz	115V-1ø-60Hz
	MASONRY/ROOF OPENING REQUIRED	--	--	--
	DESIGN MANUFACTURER	GREENHECK	GREENHECK	GREENHECK
	DESIGN MFGR. MODEL NUMBER	SP-80-VG	SP-A510-VG	SP-80-VG
ACCESSORIES	SERVICE SWITCH	YES	YES	YES
	SMOKE DETECTORS (DUCT MNTD)	--	--	--
	FIRE DAMPER	--	--	--
	CONSTRUCTION	STEEL	STEEL	STEEL
	BACKDRAFT DAMPER	YES	YES	YES
	BIRDSCREEN	--	--	--
	SOLID STATE SPEED CONTROL	--	--	--
	THERMOSTAT CONTROL	--	--	--
	FACTORY FABRICATED CURB	--	--	--
	SONES	0.3	0.7	0.3

NOTES:

1. ALL FANS SHALL HAVE AMCA CERTIFIED RATINGS.
2. FANS SHALL BE PROVIDED WITH HANGING ISOLATION KIT.
3. ALL FAN MOTORS SHALL BE "EC".

AIR COOLED SPLIT A/C UNIT SCHEDULE (DUCTLESS)

	UNIT DESIGNATION	MAC-1	MAC-2	MAC-3
	AREA SERVED	SERVER ROOM 217	BREAK ROOM 216	RECEPTION LOBBY 216
	LOCATION	WALL	WALL	WALL
	SYSTEM POWER SUPPLY AMPS	20	20	20
	INDOOR UNIT MCA/MOCP	1/15	1/15	1/15
	SEER	14.5	14.5	14.5
INDOOR UNIT	OPERATING WEIGHT LBS.	30	30	30
	DESIGN MANUFACTURER	DAIKEN	DAIKEN	DAIKEN
	MODEL NUMBER	FTXN18KEVJU	FTXN18KEVJU	FTXN18KEVJU
	TOTAL AIR CFM	300/600	300/600	300/600
	ELECTRICAL SERVICE AVAILABLE	240V-1ø-60Hz	240V-1ø-60Hz	240V-1ø-60Hz
	GRAND TOTAL CAPACITY BTU/HR.	18000	18000	18000
	ENTERING AIR TEMP. °F DB/WB	75/61	75/61	75/61
OUTDOOR UNIT	UNIT DESIGNATION	MCU-1	MCU-2	MCU-3
	TYPE OF FAN	PROPELLER	PROPELLER	PROPELLER
	AMBIENT AIR TEMP. °F DB	95	95	95
	ELECTRICAL SERVICE AVAILABLE	208V-1ø-60Hz	208V-1ø-60Hz	208V-1ø-60Hz
	OPERATING WEIGHT	100	100	100
	DESIGN MANUFACTURER MODEL NO.	RKN18KEVJU	RKN18KEVJU	RKN18KEVJU
	ELECTRICAL MCA/MOCP	18/30	18/30	18/30

NOTES

1. REFRIGERANT LINES SHALL BE INSTALLED AND SIZED AS PER MANUFACTURER'S RECOMMENDATIONS FOR THE SHOWN LOCATION.
2. EACH SYSTEM SHALL BE PROVIDED WITH INDOOR UNIT ELECTRIC POWER SUPPLIED FROM OUTDOOR UNIT WITH A CONTROL DISCONNECT SWITCH. INDOOR UNIT SHALL BE PROVIDED WITH DIGITAL WALL MOUNTED THERMOSTAT.
3. CONDENSATE PUMP SHALL BE MANUFACTURED BY SAVERNMANN MODEL No. SI-3200, 8.0 GPH, 8.0FT. SUCTION HEAD 24VA, 115V-1ø-60Hz.
4. CONDENSING UNIT COIL SHALL BE PROVIDED WITH COATING PROTECTION.

REVISIONS

NO:	DATE:	REMARKS

CONSULTANTS

Jaredian Design Group
Architects, Engineers, Construction Managers
No.33 Dronningens Gade - Queen's Quarter
Post Office Box 6218
St. Thomas, U.S. Virgin Islands 00804
telephone: 340.777.1600 fax: 340.777.1601
e-mail: jaredian2@vipowernet.net

THESE PLANS AND THE DESIGNS CONTAINED HEREIN ARE THE SOLE PROPERTY OF JAREDIAN DESIGN GROUP. THESE PLANS MAY NOT BE REPRODUCED WITHOUT THE WRITTEN PERMISSION OF JAREDIAN DESIGN GROUP. UNAUTHORIZED USE SHALL INVITE A CLAIM FOR COMPENSATION. THE USE BY ANY PERSON OR FIRM OF THESE PLANS OR ANY PART THEREOF SHALL NOT IN ANY WAY SUBJECT JAREDIAN DESIGN GROUP TO ANY COST OR DAMAGES FOR ANY ERROR OR OMISSION CONTAINED THEREIN.

PHASE II RENOVATION TO
PARCEL NO 19A & 20
KONGENS GADE
KINGS QUARTER
ST. THOMAS,
U.S.V.I. 00802-5858

DATE: 08-08-14
DRAWN BY: L.C
CHECKED BY: J.P.W.
APPROVED BY: J.P.W.

PROJECT NO: 13-002
CONTRACT NO:

SHEET NO:
M0.2
HVAC SCHEDULES

REGISTERED ARCHITECT U.S. VIRGIN ISLANDS

KEY NOTES

1. 8"ø EXHAUST AIR DUCT UP TO ROOF JACK.
2. REFRIGERANT PIPING RUUNING IN CEILING TO CU-2-1 AND CU-2-2.
3. REFRIGERANT PIPING DOWN TO 1ST FLOOR.

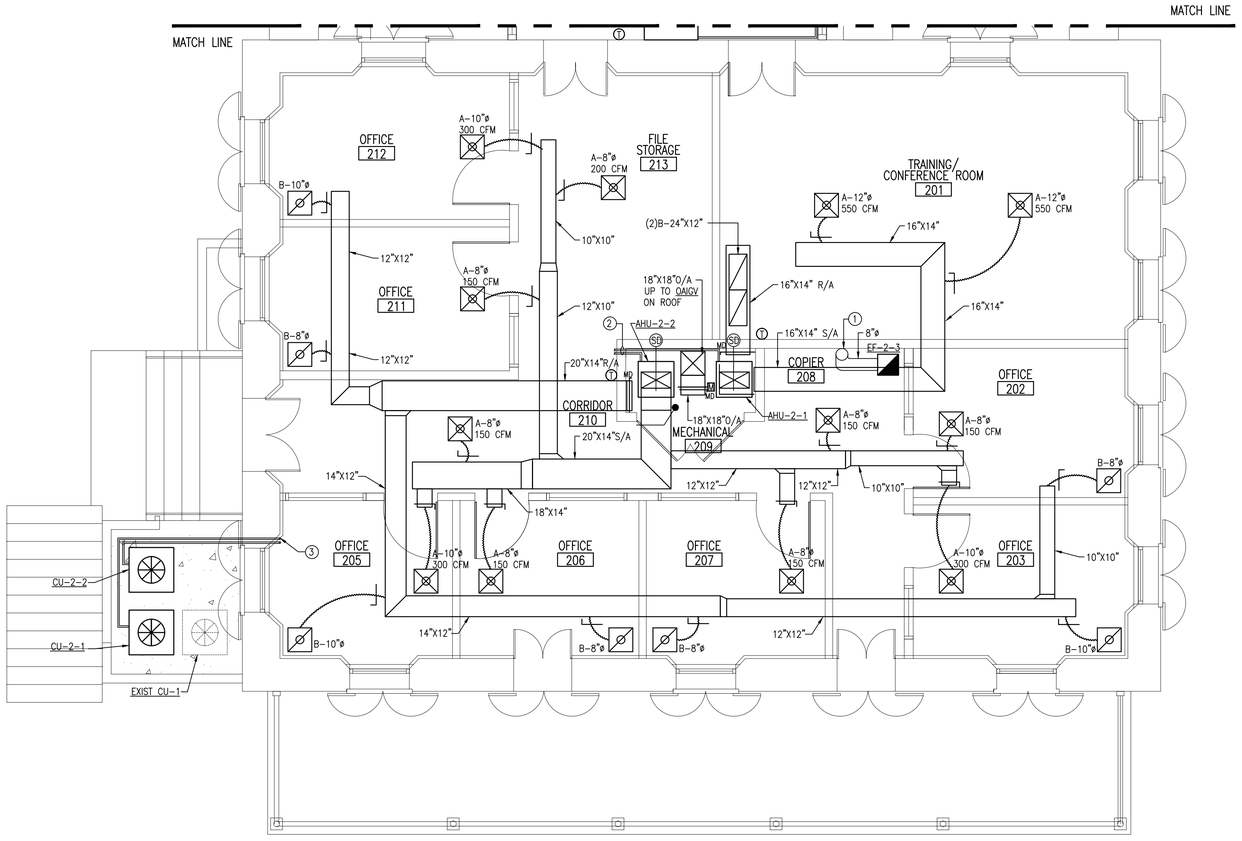

N

PLAN

1	
2M1.2A	2M1.2A

SECOND FLOOR HVAC PLAN

SCALE: 1/4"=1'-0"

REVISIONS		
NO:	DATE:	REMARKS

CONSULTANTS

Jaredian Design Group
Architects, Engineers, Construction Managers
No.33 Dronningens Gade - Queen's Quarter
Post Office Box 6218
St. Thomas, U.S. Virgin Islands 00804
telephone: 340.777.1600 fax: 340.777.1601
e-mail: jaredian2@vipowernet.net

THESE PLANS AND THE DESIGNS CONTAINED HEREIN ARE THE SOLE PROPERTY OF JAREDIAN DESIGN GROUP. THESE PLANS MAY NOT BE REPRODUCED WITHOUT THE WRITTEN PERMISSION OF JAREDIAN DESIGN GROUP. UNAUTHORIZED USE SHALL INVITE A CLAIM FOR COMPENSATION. THE USE BY ANY PERSON OR FIRM OF THESE PLANS OR ANY PART THEREOF SHALL NOT IN ANY WAY SUBJECT JAREDIAN DESIGN GROUP TO ANY COST OR DAMAGES FOR ANY ERROR OR OMISSION CONTAINED THEREIN.

PHASE II RENOVATION TO
PARCEL NO 19A & 20
KONGENS GADE
KINGS QUARTER
ST. THOMAS,
U.S.V.I. 00802-5858

DATE: 08-08-14
DRAWN BY: L.C
CHECKED BY: J.P.W.
APPROVED BY: J.P.W.

PROJECT NO: 13-002
CONTRACT NO:

SHEET NO:
2M1.2A
SECOND FLOOR HVAC PLAN

REGISTERED ARCHITECT U.S. VIRGIN ISLANDS

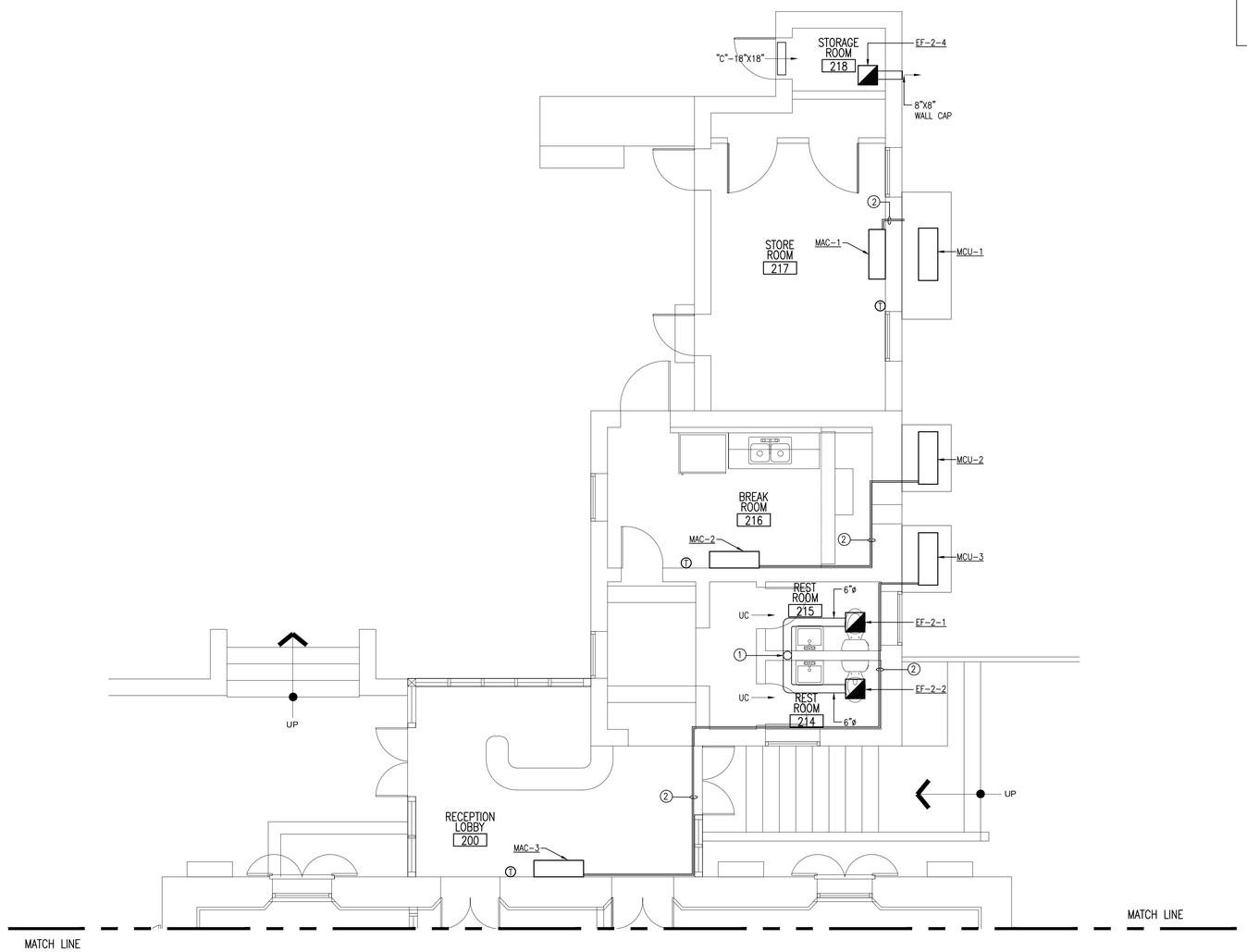

KEY NOTES

1. 8"ø EXHAUST AIR DUCT UP TO ROOF JACK.
2. REFRIGERANT PIPING RUUNING TIGHT TO CEILING SLAB.

N

PLAN

1	
2M1.2B	2M1.2B

SECOND FLOOR HVAC PLAN

SCALE: 1/4"=1'-0"

REVISIONS		
NO:	DATE:	REMARKS

CONSULTANTS

Jaredian Design Group
Architects, Engineers, Construction Managers
No.33 Dronningens Gade - Queen's Quarter
Post Office Box 6218
St. Thomas, U.S. Virgin Islands 00804
telephone: 340.777.1600 fax: 340.777.1601
e-mail: jaredian2@vipowernet.net

THESE PLANS AND THE DESIGNS CONTAINED HEREIN ARE THE SOLE PROPERTY OF JAREDIAN DESIGN GROUP. THESE PLANS MAY NOT BE REPRODUCED WITHOUT THE WRITTEN PERMISSION OF JAREDIAN DESIGN GROUP. UNAUTHORIZED USE SHALL INVITE A CLAIM FOR COMPENSATION. THE USE BY ANY PERSON OR FIRM OF THESE PLANS OR ANY PART THEREOF SHALL NOT IN ANY WAY SUBJECT JAREDIAN DESIGN GROUP TO ANY COST OR DAMAGES FOR ANY ERROR OR OMISSION CONTAINED THEREIN.

PHASE II RENOVATION TO
PARCEL NO 19A & 20
KONGENS GADE
KINGS QUARTER
ST. THOMAS,
U.S.V.I. 00802-5858

DATE: 08-08-14
DRAWN BY: L.C
CHECKED BY: J.P.W.
APPROVED BY: J.P.W.

PROJECT NO.: 13-002
CONTRACT NO.:

SHEET NO.:
2M1.2B
SECOND FLOOR HVAC PLAN

REGISTERED ARCHITECT
U.S. VIRGIN ISLANDS

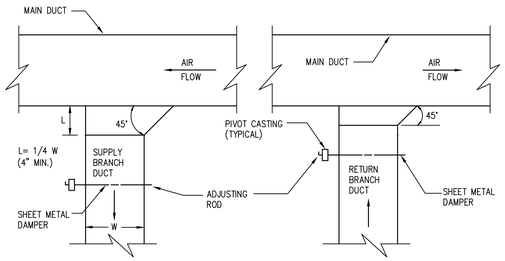

TYPICAL DUCT BRANCH TAKE OFF DETAIL FOR LOW PRESSURE DUCTWORK

1 / M2.0 N.T.S

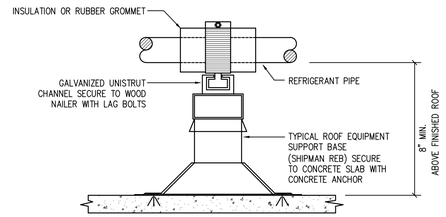

REFRIGERANT PIPE SUPPORT

2 / M2.0 N.T.S

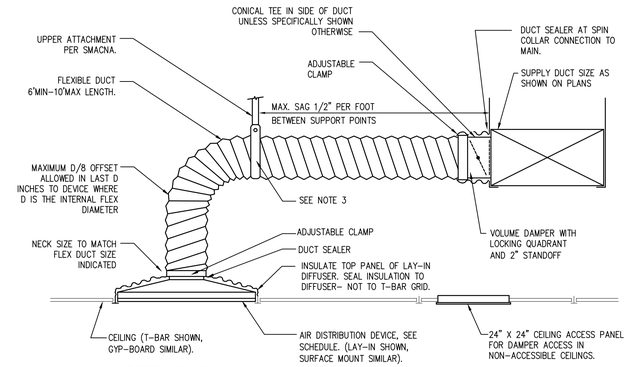

FLEXIBLE DUCT NOTES

1. FLEXIBLE DUCTS SHALL BE ONE-PIECE AND SHALL NOT BE SPLICED TOGETHER.
2. EXTEND FLEXIBLE DUCT INSULATION TO DUCT/DIFFUSER PANEL INSULATION AND SEAL WITH MASTIC.
3. MINIMUM 1 1/2" WIDE 22 GALVANIZED STRAP HANGER WITH HEMMED EDGES PER SMACNA, FIGURE 3-10.
4. FLEXIBLE AIR DUCT SHALL BE FULLY EXTENDED AND NOT COMPRESSED WITH ELBOW RADIUS NO LESS THAN R/D = 1.0.

FLEXIBLE DUCT DETAIL

3 / M2.0 N.T.S

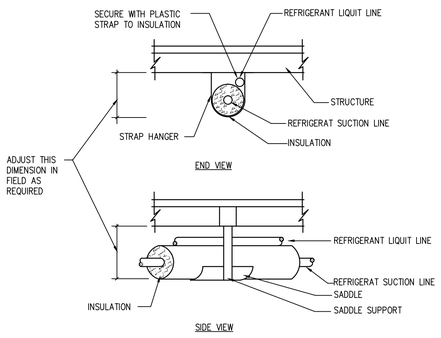

NOTES:
1- PROVIDE ISOLATION BETWEEN DISSIMILAR METALS
2- PROVIDE SADDLE PROTECTION AT EACH SUPPORT

TYPICAL REFRIGERANT PIPING HANGER DETAIL

4 / M2.0 N.T.S

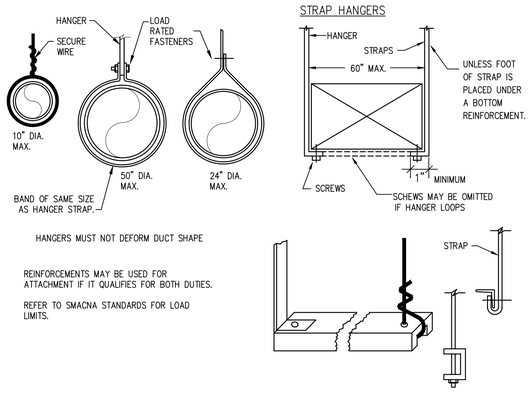

HANGERS MUST NOT DEFORM DUCT SHAPE

REINFORCEMENTS MAY BE USED FOR ATTACHMENT IF IT QUALIFIES FOR BOTH DUTIES.

REFER TO SMACNA STANDARDS FOR LOAD LIMITS.

TYPICAL DUCT HANGER DETAIL

5 / M2.0 N.T.S

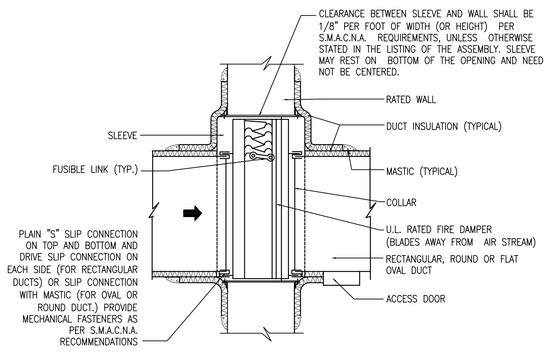

FIRE DAMPER DETAIL

6 / M2.0 N.T.S

REVISIONS		
NO:	DATE:	REMARKS

CONSULTANTS

Jaredian Design Group
Architects, Engineers, Construction Managers
No.33 Dronningens Gade - Queen's Quarter
Post Office Box 6218
St. Thomas, U.S. Virgin Islands 00804
telephone: 340.777.1600 fax: 340.777.1601
e-mail: jaredian2@vipowernet.net

THESE PLANS AND THE DESIGNS CONTAINED HEREIN ARE THE SOLE PROPERTY OF JAREDIAN DESIGN GROUP. THESE PLANS MAY NOT BE REPRODUCED WITHOUT THE WRITTEN PERMISSION OF JAREDIAN DESIGN GROUP. UNAUTHORIZED USE SHALL INVITE A CLAIM FOR COMPENSATION. THE USE BY ANY PERSON OR FIRM OF THESE PLANS OR ANY PART THEREOF SHALL NOT IN ANY WAY SUBJECT JAREDIAN DESIGN GROUP TO ANY COST OR DAMAGES FOR ANY ERROR OR OMISSION CONTAINED THEREIN.

PHASE II RENOVATION TO
PARCEL NO 19A & 20
KONGENS GADE
KINGS QUARTER
ST. THOMAS,
U.S.V.I. 00802-5858

DATE: 08-08-14
DRAWN BY: L.C
CHECKED BY: J.P.W.
APPROVED BY: J.P.W.

PROJECT NO: 13-002
CONTRACT NO:

SHEET NO:
M2.0
DETAILS

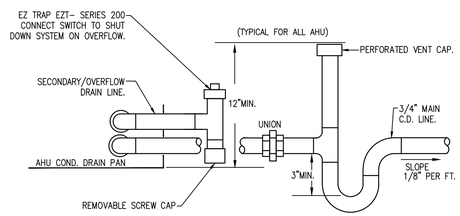

COMPLIES WITH FBC-2007 MECH VOL SECTION 307.2.3

CONDENSATE PIPE AND FITTINGS SHALL BE COPPER.

AHU CONDENSATE DRAIN LINE W/AUX. OVERFLOW SWITCH DETAIL

1 / M2.1 N.T.S

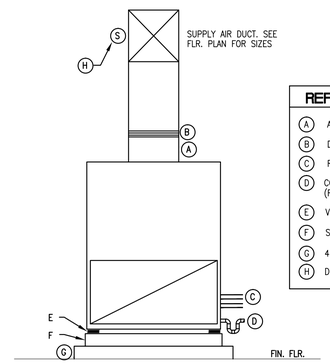

REFERENCE NOTES

- (A) AHU HEAT SECTION.
- (B) DUCT FLEXIBLE CONNECTION.
- (C) REFRIGERANT PIPING (2 SETS).
- (D) CONDENSATE DRAIN LINE & TRAP (REFER TO PLBG. DWGS.)
- (E) VIBRATION ISOLATOR PAD (TYP.)
- (F) SUB BASE
- (G) 4 INCH HIGH REINFORCED CONCRETE PAD
- (H) DUCT SMOKE DETECTOR

TYPICAL AIR HANDLING UNIT MOUNTING DETAIL

2 / M2.1 N.T.S

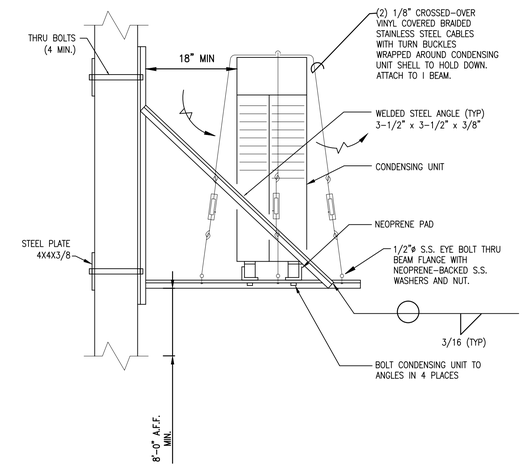

MINI-SPLIT CONDENSING UNIT WALL MOUNTING DETAIL.

3 / M2.1 N.T.S

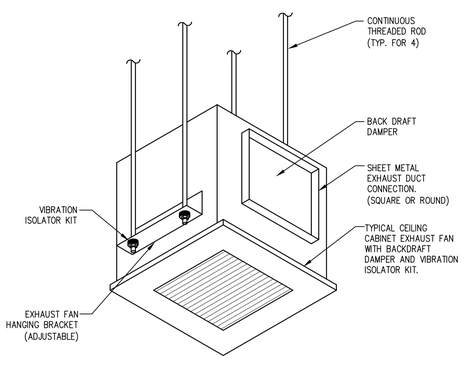

NOTE:
IF FAN IS SUPPORTED FROM HORIZONTAL JOISTS, NEOPRENE PADS MUST BE PROVIDED AT ALL CONNECTION POINTS IN ORDER TO AVOID NOISE PROPAGATION.

CEILING MOUNTED CABINET EXHAUST FAN DETAIL

4 / M2.1 N.T.S

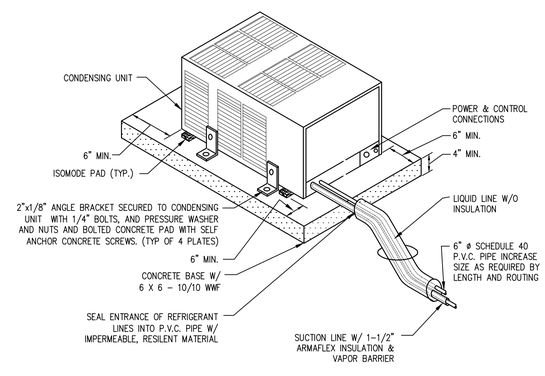

NOTE:
ALL HARDWARE TO BE GALV. OR CADMIUM PLATED FORGED STEEL ASTM-A-325.

CONDENSING UNIT MOUNTING DETAIL

5 / M2.1 N.T.S

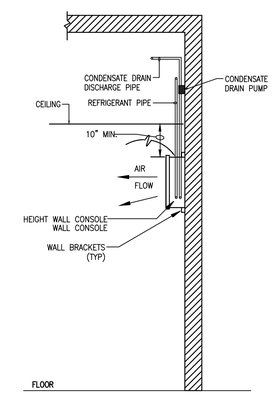

MINI-SPLIT WALL CONSOLE UNIT WALL MOUNTED DETAIL

6 / M2.1 N.T.S

REVISIONS		
NO:	DATE:	REMARKS

CONSULTANTS

Jaredian Design Group
Architects, Engineers, Construction Managers
No.33 Dronningens Gade - Queen's Quarter
Post Office Box 6218
St. Thomas, U.S. Virgin Islands 00804
telephone: 340.777.1600 fax: 340.777.1601
e-mail: jaredian2@vipowernet.net

THESE PLANS AND THE DESIGNS CONTAINED HEREIN ARE THE SOLE PROPERTY OF JAREDIAN DESIGN GROUP. THESE PLANS MAY NOT BE REPRODUCED WITHOUT THE WRITTEN PERMISSION OF JAREDIAN DESIGN GROUP. UNAUTHORIZED USE SHALL INVITE A CLAIM FOR COMPENSATION. THE USE BY ANY PERSON OR FIRM OF THESE PLANS OR ANY PART THEREOF SHALL NOT IN ANY WAY SUBJECT JAREDIAN DESIGN GROUP TO ANY COST OR DAMAGES FOR ANY ERROR OR OMISSION CONTAINED THEREIN.

PHASE II RENOVATION TO
PARCEL NO 19A & 20
KONGENS GADE
KINGS QUARTER
ST. THOMAS,
U.S.V.I. 00802-5858

DATE: 08-08-14
DRAWN BY: L.C
CHECKED BY: J.P.W.
APPROVED BY: J.P.W.

PROJECT NO: 13-002
CONTRACT NO:

SHEET NO:
M2.1
DETAILS

REGISTERED ARCHITECT
U.S. VIRGIN ISLANDS

GENERAL PLUMBING NOTES

1. PLUMBING FIXTURES, DRAINS, AND APPLIANCES USED TO RECEIVE OR DISCHARGE LIQUID WASTES OR SEWAGE SHALL BE CONNECTED TO THE SANITARY DRAINAGE SYSTEM OF THE BUILDING.

2. ANY PIPE THAT PASSES UNDER A FOOTING OR THROUGH A FOUNDATION WALL SHALL BE PROVIDED WITH A RELIEVING ARCH; OR THERE SHALL BE BUILT INTO THE MASONRY WALL A PIPE SLEEVE TWO PIPE SIZES GREATER THAN THE PIPE PASSING THROUGH.

3. BELOW-GRADE PIPING SHALL BE INSTALLED IN TRENCHES SO THAT THE PIPING RESTS ON SOLID AND CONTINUOUS BEARING. WHEN OVER EXCAVATED, THE TRENCH SHALL BE BACKFILLED TO THE PROPER GRADE WITH COMPACTED EARTH, SAND, FINE GRAVEL OR SIMILAR GRANULAR MATERIAL. PIPING SHALL NOT BE SUPPORTED BY ROCKS OR BLOCKS AT ANY POINT. ROCKY OR UNSTABLE SOIL SHALL BE OVER EXCAVATED BY TWO OR MORE PIPE DIAMETERS AND BROUGHT TO THE PROPER GRADE WITH SUITABLE COMPACTED MATERIAL.

4. BACKFILL SHALL BE FREE FROM DISCARDED CONSTRUCTION MATERIAL AND DEBRIS. BACKFILL SHALL BE PLACED EVENLY ON BOTH SIDES OF THE PIPE AND TAMPED TO RETAIN PROPER ALIGNMENT. LOOSE EARTH SHALL BE CAREFULLY PLACED IN THE TRENCH IN 6-INCH LAYERS AND TAMPED IN PLACE.

5. TRENCHING INSTALLED PARALLEL TO FOOTINGS SHALL NOT EXTEND BELOW THE 45-DEGREE BEARING PLANE OF THE BOTTOM EDGE OF A WALL OR FOOTING.

6. PIPING SHALL BE SUPPORTED SO AS TO ENSURE ALIGNMENT AND PREVENT SAGGING, AND ALLOW MOVEMENT ASSOCIATED WITH THE EXPANSION AND CONTRACTION OF THE PIPING SYSTEM.

7. PIPING IN THE GROUND SHALL BE LAID ON A FIRM BED FOR ITS ENTIRE LENGTH, EXCEPT WHERE SUPPORT IS OTHERWISE PROVIDED.

8. HANGERS AND ANCHORS SHALL BE OF SUFFICIENT STRENGTH TO MAINTAIN THEIR PROPORTIONAL SHARE OF THE WEIGHT OF PIPE AND CONTENTS AND OF SUFFICIENT WIDTH TO PREVENT DISTORTION TO THE PIPE; HANGERS AND STRAPPING SHALL BE OF APPROVED MATERIAL THAT WILL NOT PROMOTE GALVANIC ACTION. HORIZONTAL PVC PIPING ATTACHED TO THE UNDERSIDE OF EXPOSED SLABS SHALL BE SUPPORTED AT NOT MORE THAN 4 FEET ON CENTER.

9. VALVES, PIPES, AND FITTINGS SHALL BE INSTALLED IN CORRECT RELATIONSHIP TO THE DIRECTION OF FLOW.

WATER CLOSET NOTES

1. WATER CLOSETS SHALL CONFORM TO AMERICAN SOCIETY OF MECHANICAL ENGINEERS ASME 112.19.2 (VITREOUS CHINA PLUMBING FIXTURES) AND THE HYDROLIC REQUIREMENTS OF ASME 112.19.6 (HYDROLIC PERFORMANCE REQUIREMENTS FOR WATER CLOSETS AND URINALS).

2. WATER CLOSETS THAT PERMIT THE BACKFLOW OF THE CONTENTS OF THE BOWL INTO THE FLUSH TANK SHALL BE PROHIBITED.

3. FLUSH TANKS SHALL BE PROVIDED WITH OVERFLOWS DISCHARGING TO THE WATER CLOSET CONNECTED THERETO AND SUCH OVERFLOW SHALL BE OF SUFFICIENT SIZE TO PREVENT FLOODING THE TANK AT THE MAXIMUM RATE AT WHICH THE TANKS ARE SUPPLIED WITH WATER ACCORDING TO THE MANUFACTURER'S DESIGN CONDITIONS.

4. ALL PARTS OF THE FLUSH TANK SHALL BE ACCESSIBLE FOR REPAIR AND REPLACEMENT.

5. WATER CLOSETS SHALL BE EQUIPPED WITH SEATS OF SMOOTH, NONABSORBENT MATERIAL AND SHALL BE PROPERLY SIZED FOR THE WATER CLOSET BOWL TYPE.

6. THE MAXIMUM ALLOWABLE FLOW RATE FOR WATER CLOSETS SHALL BE 1.6 GALLONS PER FLUSHING CYCLE.

LAVATORY NOTES

1. LAVATORIES SHALL CONFORM TO AMERICAN SOCIETY OF MECHANICAL ENGINEERS ASME 112.19.2 (VITREOUS CHINA PLUMBING FIXTURES) OR ASME A112.19.9 (NON-VITREOUS CERAMIC PLUMBING FIXTURES).

2. LAVATORIES SHALL HAVE WASTE OUTLETS NOT LESS THAN 1.25 INCH IN DIAMETER.

3. THE MAXIMUM ALLOWABLE FLOW RATE FOR LAVATORY FAUCETS SHALL BE 2.2 GALLONS PER MINUTE AT 60 PSI.

PLUMBING FIXTURE SCHEDULE

SYMBOL	FIXTURE	MANUFACTURER MODEL No.	COLOR/ FINISH	ACCESSORIES	REMARKS
WC-1	WATER CLOSET HANDICAPPED PRESSURE ASSISTED1.1 GPF MTD ELONGATED 16 ½" HIGH	AMERICAN STANDARD MODEL NO. #2467.100	WHITE	AMERICAN STD. SOLID PLASTIC SEAT #5901.110 FRONT LESS COVER	ADA COMPLIANT
L-1	UNDER COUNTER MOUNTED LAVATORY	AMERICAN STANDARD	WHITE	SYMMONS S-60-G-H METERING FAUCET WITH TEMPERATURE SELECTION CHROME P TRAP SUPPLIES WITH LOOSE HANDLE. TRUEBRO LAV GAURD KIT MODEL # 103 E-Z KIT	UNDER MOUNT ADA COMPLIANT AUTOMATED FAUCETS
W-1	WATER HEATER	POINT OF USE			LOCATE UNDER LAVATORY COUNTER
S-1	STAINLESS STEEL UNDER MOUNTED SINK	POINT OF USE			

SLOPE OF HORIZONTAL DRAINAGE PIPE	
SIZE (INCHES)	MIN. SLOPE (IN. PER FT.)
2 1/2 OR LESS	1/4"
3 TO 6	1/8"

PLUMBING FIXTURE NOTES

1. PLUMBING FIXTURES, FAUCETS, AND FIXTURE FITTINGS SHALL BE CONSTRUCTED OF APPROVED MATERIALS, SHALL HAVE SMOOTH IMPERVIOUS SURFACES, SHALL BE FREE FROM DEFECTS AND CONCEALED FOULING SURFACES. PLUMBING FIXTURES SHALL BE PROVIDED WITH AN ADEQUATE SUPPLY OF POTABLE WATER TO FLUSH AND KEEP THE FIXTURES NI A CLEAN AND SANITARY CONDITION WITHOUT DANGER OF BACKFLOW OR CROSS CONNECTION.

2. PLUMBING FIXTURES, OTHER THAN WATER CLOSETS, SHALL BE PROVIDED WITH APPROVED STRAINERS.

3. FLOOR-OUTLET OR FLOOR-MOUNTED FIXTURES SHALL BE SECURED TO THE DRAINAGE CONNECTION AND TO THE FLOOR, WHEN SO DESIGNED, BY SCREWS, BOLTS, WASHERS, NUTS AND SIMILAR FASTENERS OF COPPER, BRASS, OR OTHER CORROSION-RESISTANT MATERIAL.

4. WHERE FIXTURES COME IN CONTACT WITH WALLS AND FLOORS, THE CONTACT AREA SHALL BE WATERTIGHT.

5. THE CENTERLINE OF WATER CLOSETS SHALL BE LOCATED 18 INCHES FROM ADJACENT WALLS OR PARTITIONS

6. THE LOCATION OF PIPING, FIXTURES, OR EQUIPMENT SHALL NOT INTERFERE WITH THE OPERATION OF WINDOWS OR DOORS.

7. CONTRACTOR SHALL SAW CUT THE FLOOR AS REQUIRED AND SHALL RE-ROUTE THE EXISTING SANITARY SEWER LINES AND DOMESTIC WATER LINES TO SERVICE THE NEW CONFIGURATION OF THE RESTROOM.

8. THE CONTRACTOR SHALL SAW CUT AND INSTALL BELOW GRADE A NEW 2" DIAMETER SCHEDULE 40 PVC CONDENSATE DRAINAGE LINE AS INDICATED ON THE PLANS. THE LINE SHALL DRAIN TO THE EXISTING SWALE OUTSIDE THE BUILDING.

PLUMBING GENERAL NOTES

1. PROVIDE PLUMBING CLEAN OUT AS PER CODE.
2. ALL PLUMBING WORK SHALL COMPLY BOTH WITH THE V.I. AND NATIONAL PLUMBING CODES.
3. ALL FIXTURES SHALL BE VENTED
4. ALL HOT WATER LINES SHALL BE CPVC.
6. FIXTURES WILL BE PURCHASE AND INSTALLED BY THE CONTRACTOR. THE CONTRACTOR IS RESPONSIBLE FOR THE COORDINATION OF THE SPECIFIC TYPE THAT WILL BE USED.
7. THE CONTRACTOR IS RESPONSIBLE FOR THE COORDINATION OF THE PLUMBING LINE THAT WILL RUN THROUGH THE EXISTING FOUNDATION SYSTEM. THEY SHALL PATCH ALL FLOOR OR WALLS.
9. ALL PIPES PENETRATING THROUGH ROOF SHALL BE FLASHED IN ACCORDANCE WITH THE MANUFACTURER'S RECOMMENDATIONS.
10. THE CONTRACTOR IS RESPONSIBLE FOR ALL THE PLUMBING FITTINGS AND FAUCETS.
11. ALL PLUMBING LINES SHALL BE SCHEDULE 40 PVC MINIMUM.
12. PROVIDE ALL REQUIRED BLOCKING IN THE WALLS AND WATER ARRESTOR HAMMERS.
13. THE CONTRACTOR SHALL PROVIDE ALL WATER HAMMER ARRESTORS AS REQUIRED TO NO NOISE ARE MADE FROM THE PIPES.
14. THE CONTRACTOR SHALL SAW CUT EXISTING CONCRETE FLOOR AS REQUIRED TO TIE NEW PLUMBING FIXTURES TO EXISTING SANITARY SEWER LINE
15. THE CONTRACTOR SHALL LOCATE EXISTING DOMESTIC WATER LINES AND SHALL TIE THE NEW TO EXISTING.

REVISIONS		
NO:	DATE:	REMARKS
1	8-14-14	REVISION NO.1

CONSULTANTS

Jaredian Design Group
Architects, Engineers, Construction Managers
No.33 Dronningens Gade - Queen's Quarter
Post Office Box 6218
St. Thomas, U.S. Virgin Islands 00804
telephone: 340.777.1600 fax: 340.777.1601
e-mail: jaredian2@vipowernet.net

THESE PLANS AND THE DESIGNS CONTAINED HEREIN ARE THE SOLE PROPERTY OF JAREDIAN DESIGN GROUP. THESE PLANS MAY NOT BE REPRODUCED WITHOUT THE WRITTEN PERMISSION OF JAREDIAN DESIGN GROUP. UNAUTHORIZED USE SHALL INVITE A CLAIM FOR COMPENSATION. THE USE BY ANY PERSON OR FIRM OF THESE PLANS OR ANY PART THEREOF SHALL NOT IN ANY WAY SUBJECT JAREDIAN DESIGN GROUP TO ANY COST OR DAMAGES FOR ANY ERROR OR OMISSION CONTAINED THEREIN.

PHASE II RENOVATION TO
PARCEL NO 19A & 20
KONGENS GADE
KINGS QUARTER
ST. THOMAS,
U.S.V.I. 00802-5858

DATE: 12-2-15
DRAWN BY: K.R.B
CHECKED BY: J.P.W.
APPROVED BY: J.P.W.

PROJECT NO: 13-002
CONTRACT NO:

SHEET NO: **P0.0**

LEGEND/NOTES

REGISTERED ARCHITECT U.S. VIRGIN ISLANDS

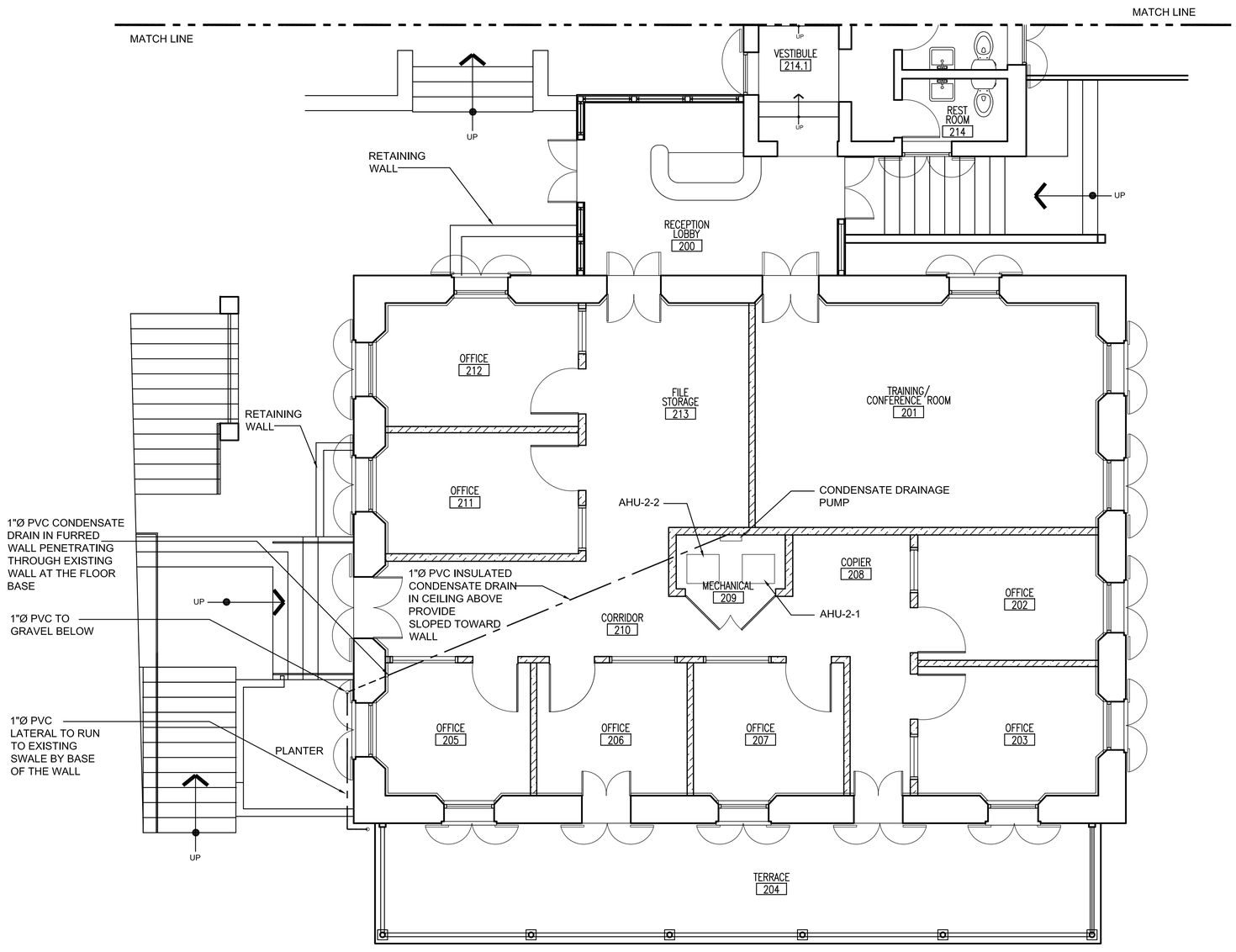

N

PLAN

1	
P2.0	P2.0

SECOND FLOOR PLUMBING FLOOR PLAN

SCALE: 1/4"=1'-0"

REVISIONS		
NO:	DATE:	REMARKS

CONSULTANTS

Jaredian Design Group
Architects, Engineers, Construction Managers
No.33 Dronningens Gade - Queen's Quarter
Post Office Box 6218
St. Thomas, U.S. Virgin Islands 00804
telephone: 340.777.1600 fax: 340.777.1601
e-mail: jaredian2@vipowernet.net

THESE PLANS AND THE DESIGNS CONTAINED HEREIN ARE THE SOLE PROPERTY OF JAREDIAN DESIGN GROUP. THESE PLANS MAY NOT BE REPRODUCED WITHOUT THE WRITTEN PERMISSION OF JAREDIAN DESIGN GROUP. UNAUTHORIZED USE SHALL INVITE A CLAIM FOR COMPENSATION. THE USE BY ANY PERSON OR FIRM OF THESE PLANS OR ANY PART THEREOF SHALL NOT IN ANY WAY SUBJECT JAREDIAN DESIGN GROUP TO ANY COST OR DAMAGES FOR ANY ERROR OR OMISSION CONTAINED THEREIN.

PHASE II RENOVATION TO
PARCEL NO 19A & 20
KONGENS GADE
KINGS QUARTER
ST. THOMAS,
U.S.V.I. 00802-5858

DATE: 12-2-15
DRAWN BY: R.O.P
CHECKED BY: J.P.W.
APPROVED BY: J.P.W.

PROJECT NO: 13-002
CONTRACT NO:

SHEET NO:
P2.0
SECOND FLOOR PLUMBING PLAN

REGISTERED ARCHITECT U.S. VIRGIN ISLANDS

PLUMBING NOTES

1. CONTRACTOR SHALL LOCATE EXISTING WATER LINE AND TIE NEW FIXTURES AND KITCHEN SINK IN TO THEM.
2. THE CONTRACTOR SHALL LOCATE EXISTING SANITARY SEWER LINE AND SHALL TIE NEW WASTE LINE FROM KITCHEN SINK IN TO IT.
3. ALL FIXTURES MUST BE VENTED.

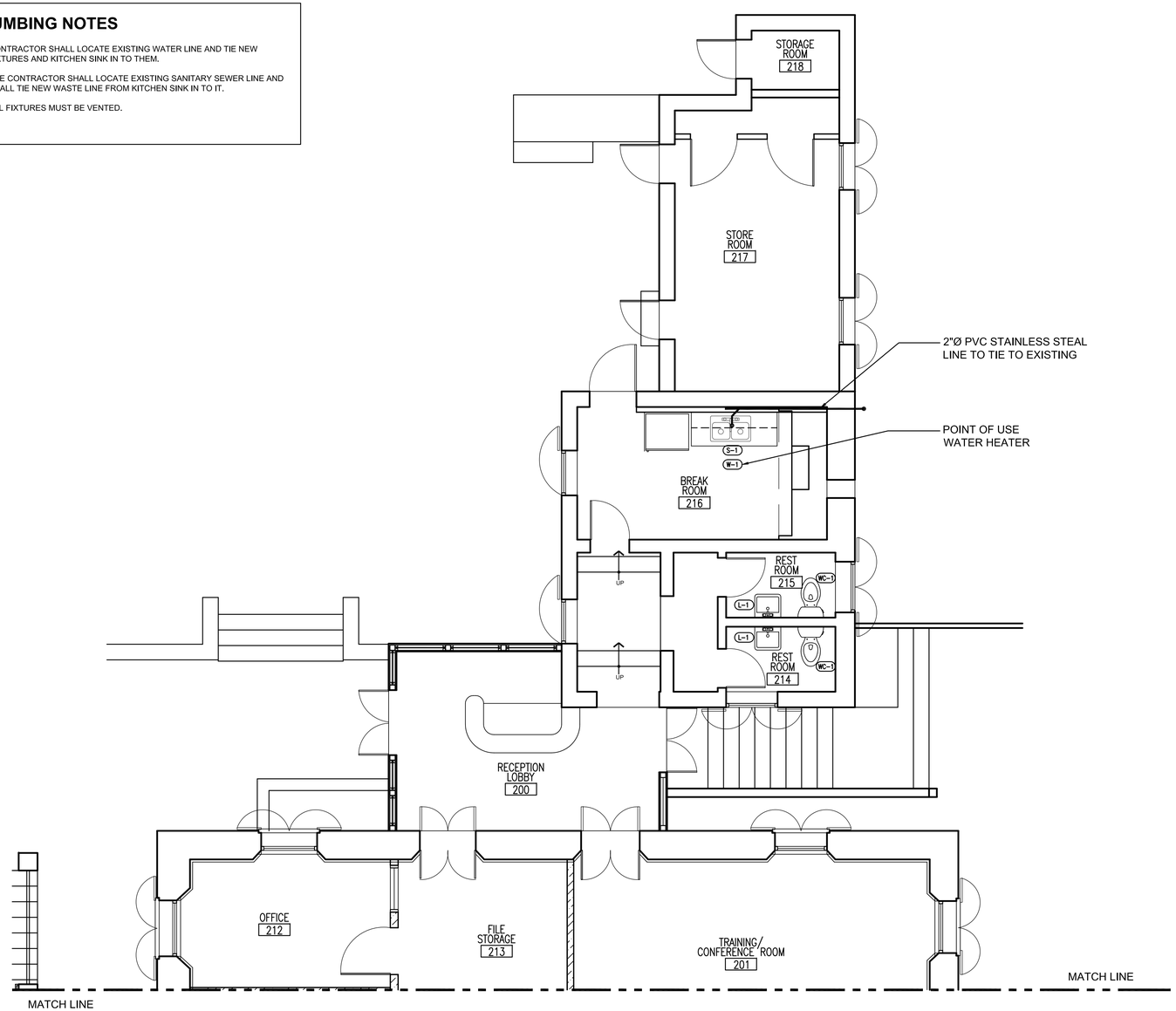

1 P2.1 P2.1 **SECOND FLOOR PLUMBING FLOOR PLAN**
SCALE: 1/4"=1'-0"

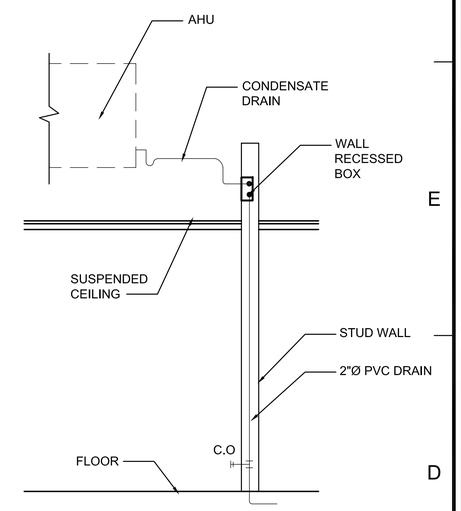

2 P2.1 P2.1 **CONDENSATE DRAIN SCHEMATIC DIAGRAM**
SCALE: N.T.S

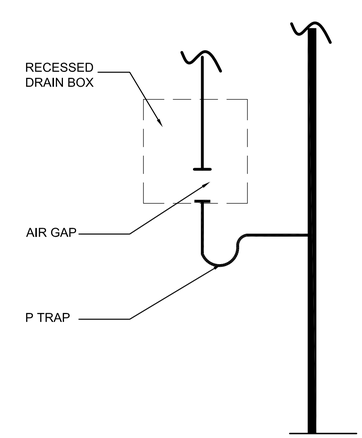

3 P2.1 P2.1 **CONDENSATE DRAIN SCHEMATIC DIAGRAM**
SCALE: N.T.S

REVISIONS

NO:	DATE:	REMARKS

CONSULTANTS

Jaredian Design Group
Architects, Engineers, Construction Managers
No.33 Dronningens Gade - Queen's Quarter
Post Office Box 6218
St. Thomas, U.S. Virgin Islands 00804
telephone: 340.777.1600 fax: 340.777.1601
e-mail: jaredian2@vipowernet.net

THESE PLANS AND THE DESIGNS CONTAINED HEREIN ARE THE SOLE PROPERTY OF JAREDIAN DESIGN GROUP. THESE PLANS MAY NOT BE REPRODUCED WITHOUT THE WRITTEN PERMISSION OF JAREDIAN DESIGN GROUP. UNAUTHORIZED USE SHALL INVITE A CLAIM FOR COMPENSATION. THE USE BY ANY PERSON OR FIRM OF THESE PLANS OR ANY PART THEREOF SHALL NOT IN ANY WAY SUBJECT JAREDIAN DESIGN GROUP TO ANY COST OR DAMAGES FOR ANY ERROR OR OMISSION CONTAINED THEREIN.

PHASE II RENOVATION TO
PARCEL NO 19A & 20
KONGENS GADE
KINGS QUARTER
ST. THOMAS,
U.S.V.I. 00802-5858

DATE: 12-2-15
DRAWN BY: R.O.P
CHECKED BY: J.P.W.
APPROVED BY: J.P.W.

PROJECT NO: 13-002
CONTRACT NO:

SHEET NO: P2.1
SECOND FLOOR PLUMBING PLAN

REGISTERED ARCHITECT U.S. VIRGIN ISLANDS

PANEL "RB" (10 KAIC)

TYPE: SQ'D NQOD
MTG: FLUSH MOUNTED
MAIN: 2P-100A M.C.B.

CU BUS/GND. BUS

VOLTS: 120/240V, 1ø, 3W
BUS: 100A
LOAD: 20.9KVA/240V = 87.1 A

LOAD	COND.	WIRE	TRIP	POLE	DESCRIPTION	CKT No.	CKT No.	DESCRIPTION	POLE	TRIP	WIRE	COND.	LOAD
720	1/2"	12	20	1	OFFICE RECEPTS	1	2	COPIER	1	20	12	1/2"	1200
720						3	4	OFFICE RECEPTS					720
720						5	6						720
720						7	8						720
720					BATH RECEPTS	9	10	RECEPTION/COM. RECEPTS					900
1200					REFRIGERATOR	11	12	BATH RECEPTS					1500
1000					LIGHTING	13	14	BATH RECEPTS					1500
1000						15	16	LIGHTING					1000
1000						17	18	LIGHTING					1000
240					EXH. FAN EF-2-3	19	20	CONDENSER WATER PUMP					700
720					OFFICE RECEPTS	21	22	EXTERIOR REC					400
300					TERRAZA LIGHTS (**)	23	24	SPARE			--	--	500
500	--	--			SPARE	25	26	SPARE			--	--	500
--	--	--	--	--	SPACE	27	28	SPACE	--	--	--	--	--
--	--	--	--	--	SPACE	29	30	SPACE	--	--	--	--	--

1. (**) ON TIME CLOCK

PANEL "ACB" (10 KAIC)

TYPE: SQ'D NQOD
MTG: FLUSH MOUNTED
MAIN: 2P-125A M.C.B.

CU BUS/GND. BUS

VOLTS: 120/240V, 1ø, 3W
BUS: 225A
LOAD: 27.3KVA/240V = 113.6 A

LOAD	COND.	WIRE	TRIP	POLE	DESCRIPTION	CKT No.	CKT No.	DESCRIPTION	POLE	TRIP	WIRE	COND.	LOAD
1800	1/2"	12	20	2	AHU-2-1 (*)	1	2	CU-2-1 (*)	2	30	10	3/4"	3672
--	--	--				3	4				--	--	--
1800	1/2"	12	20	2	AHU-2-2 (*)	5	6	CU-2-2 (*)	2	60	6	1"	5136
--	--	--				7	8				--	--	--
4320	3/4"	10	30	2	MAC-1/MCU (*)	9	10	MAC-2/MCU (*)	2	30	10	3/4"	4320
--	--	--				11	12				--	--	--
4320	3/4"	10	30	2	MAC-3/MCU (*)	13	14	INSTA-HOT WATER HEATER	2	30	10	3/4"	5500
--	--	--				15	16				--	--	--
--	--	--	--	--	SPACE	17	18	SPACE	--	--	--	--	--
--	--	--	--	--		19	20		--	--	--	--	--
--	--	--	--	--		21	22		--	--	--	--	--
--	--	--	--	--		23	24		--	--	--	--	--

1. (*) PROVIDE HACR TYPE BREAKER

HOUSE LIGHTING FIXTURE SCHEDULE

Type	Luminaire Description	Manufacturer and Catalog Number	Volts	Lamp Information No.	Lamp Information Type/Base/Color/CRI	Mounting	Finish	Remarks
A	4" LED HI-HAT	MAXLUME H3-LED / LED-1302-6W-FL-35K-W-WH-CLE	MVOLT	N/A	6W, WHITE LED ARRAY, 35K INCLUDED	RECESSED	WHITE	NON DIMMABLE
B	18" LED SURFACE DECORATIVE	WINONA LIGHTING WFO2151 18DIA LPDIA 35K MVOLT BA DIM	DUAL	N/A	63.8W WHITE LED ARRAY, 35K INCLUDED	SURFACE	ACRYLIC	0-10V DIMMING
C	24" LED SURFACE DECORATIVE	WININA LIGHTING WFO2151 24DIA LPDIA 35K MVOLT BA DIM	DUAL	N/A	63.8W WHITE LED ARRAY, 35K INCLUDED	SURFACE	ACRYLIC	0-10V DIMMING
D	4' LED WRAP	LITHONIA LBL2 LP835	DUAL	N/A	28W WHITE LED ARRAY, 35K INCLUDED	SURFACE	WHITE	NON DIMMABLE
E	TWO HEAD LED EMERGENCY LIGHT	LITHONIA ELM2 LED	DUAL	2	1.5W/3.6V WHITE LED, 35K INCLUDED	WALL 7' AFF	WHITE	UL924 LISTED SUITABLE FOR DAMP LOCATION
F	13" DIA LED SURFACE MOUNT	KENALL MR13FFL PP MW 20L35K DV	DUAL	N/A	20W WHITE LED ARRAY, 35K INCLUDED	SURFACE	WHITE	
G	EXTERIOR PERIOD WALL MOUNT	ANTIQUE STREET LIGHTING LOV 32TRT PQ-III WP	120	1	32W T(T4) GX24Q-3 4100K, 82 CRI	WALL HEIGHT AS PER ARCH	BLACK	SUITABLE FOR WET LOCATION
X	THERMOPLASTIC LED EXIT LIGHT WITH EMERGENCY BATTERY PACK	LITHONIA EXR LED M6	DUAL	N/A	2.5W, RED LED ARRAY INCLUDED	UNIVERSAL	WHITE	SINGLE AND DOUBLE FACE EXIT WITH CHEVRONS SUITABLE FOR DAMP LOCATION

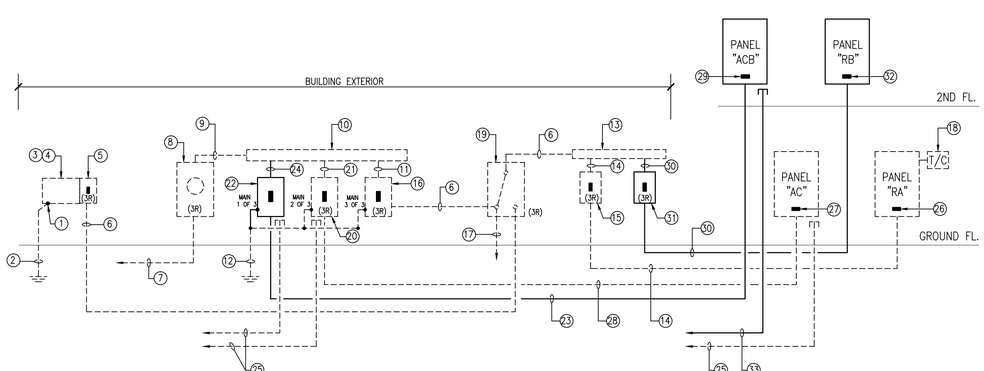

ELECTRICAL RISER DIAGRAM

N.T.S.

ELECTRICAL SYMBOL LEGEND

- WALL OR CEILING MOUNTED EXIT LIGHT FIXTURE WITH BATTERY BACK-UP. ARROWS, NUMBER OF FACES AND MOUNTING AS REQUIRED TO INDICATE A CLEAN PATH TO EXIT.
- $ — 120/277 V., 20 AMP., SINGLE POLE LIGHT SWITCH.
- $3 — 120/277V., 20 AMP., THREE WAY SWITCH.
- ELECTRICAL PANEL
- FUSED DISCONNECT SWITCH SIZED PER EQUIPMENT NAMEPLATE.
- MAGNETIC MOTOR STARTER, PROVIDED BY MECHANICAL CONTRACTOR, INSTALLED BY ELECTRICAL CONTRACTOR.
- ELECTRIC MOTOR.
- EQUIPMENT CONNECTION WITH FLEXIBLE CONDUIT.
- 20A., 120 V., QUADRUPLEX RECEPTACLE, TWO DUPLEX IN TWO BOX. 18" A.F.F.
- 20 A., 120., V., DUPLEX RECEPTACLE, GROUNDING TYPE, U.O.N. MOUNTED 18" A.F.F.
- TELEPHONE/DATA OUTLET IN 4"X 4" BOX
- T.V. — CABLE TV OUTLET
- J — CEILING OR WALL MOUNTED JUNCTION BOX.

FIRE ALARM LEGEND

- F — PULL STATION
- H — ADA HORN/STROBE
- L — ADA HORN/LIGHT
- S — PHOTOELECTRIC SMOKE DETECTOR
- S — SMOKE DUCT DETECTOR WITH SAMPLING TUBES

NOTE: ALL DEVICES TO BE COMPATIBLE WITH EXISTING SYSTEM.

GENERAL ELECTRICAL NOTES

1. ALL WORK SHALL BE IN ACCORDANCE WITH NATIONAL ELECTRICAL CODE, FLORIDA BUILDING CODE AND OTHER APPLICABLE CODES AND STANDARDS.
2. a) THE DRAWINGS ARE DIAGRAMMATIC AND DO NOT SHOW ALL OFFSETS, BENDS AND BOXES REQUIRED TO MAKE A COMPLETE NEAT INSTALLATION IN ACCORDANCE WITH N.E.C.
   b) WHEN CONFLICTS ARISE IN LOCATIONS WIRING DEVICES, ELECTRICAL EQUIPMENT, DISCONNECTS, PANELBOARDS, ETC. DUE TO FIELD CONDITION OR IMPROPER FIELD COORDINATION CONTRACTOR SHALL BRING IT TO THE A/E'S ATTENTION AND AT NO EXTRA COST RELOCATE, AND OR EXTEND WITHIN A REASONABLE DISTANCE SUCH ITEM WHICH IS IN CONFLICT. THE CONTRACTOR IS RESPONSIBLE FOR COORDINATING LOCATION OF ALL COMPONENTS PRIOR TO ROUGH IN WITH ALL TRADES NO EXTRAS WILL BE ALLOWED FOR FAILURE TO DO SO.
3. THE CONTRACTOR IS RESPONSIBLE FOR EVALUATING FIELD CONDITIONS BY VISITING THE SITE PRIOR TO COMMENCING / BIDDING WORK.
4. ALL DEVICE BOXES SHALL BE INSTALLED FLUSH AND CONDUITS RUN CONCEALED IN FINISHED AREAS EXCEPT AS SPECIFICALLY SHOWN/NOTED OTHERWISE.
5. INSTALL POWER AND CONTROL WIRING AND REQUIRED CONTROL COMPONENTS FOR AIR CONDITIONING SYSTEM AS SHOWN/NOTED ON THESE DRAWINGS AND PER OTHER APPLICBLE DRAWINGS / INSTRUCTIONS. SEE AIR CONDITIONING DRAWING.
6. ALL MATERIAL REMOVED SHALL BE DISPOSED OF AS DIRECTED BY OWNER.
7. ALL WIRING INDICATED AS EXISTING IS BASED ON ORIGINAL CONTRACT DRAWINGS AND IS TO BE VERIFIED BY CONTRACTOR AT JOB SITE.
8. MINIMUM WIRE SIZE SHALL BE # 12 THHN / THWN UNLESS OTHERWISE NOTED ON PLANS.
9. ALL CONDUCTORS SHALL BE COPPER.
10. ALL MATERIALS SHALL BE U.L. APPROVED.
11. NEW TYPEWRITTEN PANEL TALLY SHALL BE FURNISHED AFTER JOB IS COMPLETED.
12. ALL BRANCH CIRCUITS SHALL BE PROPERLY PHASE BALANCED.
13. ALL NON POWER RELATED WIRING IN CEILING AIR CONDITIONING PLENUM RUNNING WITHOUT CONDUIT SHALL BE TEFLON COATED CLASSIFIED FOR USE IN PLENUMS.
14. ALL BRANCH CIRCUITS TO HAVE A GREEN EQUIPMENT GROUNDING CONDUCTOR SIZED AS PER N.E.C. 250.122.
15. ALL EMPTY CONDUITS TO BE PROVIDED WITH NYLON PULL STRINGS.
16. FUSES SHALL BE DUAL ELEMENT, TIME DELAY TYPE UNLESS OTHERWISE NOTED.
17. A/C EQUIPMENT WIRING, BREAKER AND FUSE SIZES ARE BASED ON A/C EQUIPMENT SPECIFIED ON CONTRACT DRAWING. CONTRACTOR IS RESPONSIBLE FOR PROVIDING ALL WIRING, BREAKER AND FUSES SIZES IN ACCORDANCE WITH A/C EQUIPMENT NAMEPLATE REQUIREMENTS IF DIFFERENT FROM THAT SPECIFIED ON DRAWINGS, AS WELL AS ANY FEEDER CHANGES BEING AFFECTED BY THIS CHANGE CONTRACTOR SHALL MAKE ABOVE MENTIONED CHANGES AT NO EXTRA COST.
18. CONTACTOR SHALL COORDINATE ALL HIS WORK WITH OTHER TRADES IN ORDER TO FURNISH AND INSTALL ALL CONTROL WIRING AND RACEWAYS, ALL POWER CONTROL CIRCUIT WIRING AND RACEWAY AS SHOWN ON THE AIR CONDITIONING DRAWING OR SPECIFICATIONS. IF AIR CONDITIONG DRAWING REFER TO MANUFACTURER ALL REQUIREMENT AND INCLUDE ALL RELATED WORK IN HAS CONTACT.
19. ALL LUMINARIES SHALL BE PROPERLY SUPPORTED IN ACCORDANCE WITH THE CEILING SYSTEM MANUFACTURER RECOMMENDATIONS AND LOCAL CODE REQUIREMENTS.
20. RISERS ARE DIAGRAMMATIC ONLY. THEY DO NOT SHOW EVERY BEND REQUIRED FOR THE INSTALLATION.
21. THIS DRAWING IS A GUIDE FOR THE ELECTRICAL INSTALLTION. THE ELECTRICAL CONTRACTOR IS RESPONSIBLE TO PROVIDE A FUNCTIONING SYSTEM.

    ALL CABLES SHALL BE RUN WITH OUT SPLICES EXCEPT IF OTHERWISE INDICATED.
22. ALL PULL AND JUNCTION BOXES SHAL BE ACCESSIBLE AT ALL TIMES.
23. EXACT POINT AND METHODS OF CONNECTION SHALL BE DETERMINED IN FIELD.
24. ALL WORK SHALL BE DONE IN A NEAT AND WORKMANLIKE MANNER.
25. ALL RACEWAY ROUTED, INSULATED CONDUCTORS SYSTEM SHALL BE COLOR CODED AS FOLLOWS:

	120/240 V SYSTEM
PHASE 'A'	BLACK
PHASE 'B'	RED
NEUTRAL	WHITE
GROUND	GREEN

EXISTING FIRE ALARM SYSTEM NOTES

1. FURNISH AND INSTALL ALL LABOR, MATERIAL, AND EQUIPMENT NECESSARY FOR THE ADDITION OF NEW FIRE ALARM DEVICES FOR AN EXISTING FIRE ALARM SYSTEM, AS SPECIFIED HEREIN AND AS SHOWN ON THE ELECTRICAL DRAWINGS. THIS SYSTEM SHALL BE ZONED, ELECTRICALLY SUPERVISED, HAVE CLOSED CIRCUITS, AND SHALL BE CONNECTED, TESTED AND LEFT IN FIRST CLASS OPERATING CONDITION.
2. FIRE ALARM SYSTEM SHALL BE U.L. LISTED NFPA 72 APPROVED.
3. UPON ACTIVATION OF FIRE ALARM SYSTEM BY MANUAL STATION, THE FOLLOWING SHALL TAKE PLACE:
   A ENERGIZE ALARM SIGNALING DEVICES
   B SOUND AUDIBLE ALARMS AND FLASH VISUAL SIGNALS
   C ALERT LOCAL FIRE DEPARTMENT OR PROPRIETARY SYSTEM
   D CAUSE ZONE IN ALARM TO BE DISPLAYED ON THE ANNUNCIATOR
4. ALL WIRING AND CONDUIT SIZE SHALL BE IN ACCORDANCE WITH MANUFACTURER'S RECOMMENDATION, AND REQUIREMENTS OF NEC, LOCAL CODES AND NFPA IN NO CASE. SHALL THE WIRING BE SMALLER THAN#16
5. ALL CONDUCTORS SHALL BE COOPER AND SHALL BE SIZED FOR A MAXIMUM LOSS OF 1dB. MINIMUM WIRE SIZE SHALL BE AS REQUIRED BY MANUFACTURER IN NO CASE. SHALL THE WIRING BE SMALLER THAN #16 F.P.L. CU IN. 3/4 CONDUIT
6. QUANTITY OF WIRES PER DEVICES SHALL BE AS REQUIRED BY MANUFACTURER.
7. SYSTEM TO BE POWER LIMITED.
8. VISUAL ALARMS PER ANSI A117.1,4.26, FBC AND ADA

ELECTRICAL RISER CODED NOTES

1. EXISTING BOND FRAME ONLY.
2. EXISTING 1#6(G)-3/4"C TO A 5/8"DIAX10FT LONG COPPER CLAD STEEL GND DRIVEN ROAD.
3. EXISTING GENERATOR 28.8KVA/KW, 240V, 1ø FIELD VERIFY LOCATION.
4. EXISTING WIRE GENERATOR AS A NON-SEPARATELY DERIVED SYSTEM.
5. EXISTING 2P-150A MAIN BREAKER.
6. EXISTING 3#1/0 & #6(G)-2"C.
7. EXISTING 3#400KCMIL-3"C TO POWER CO. POINT OF SERVICE.
8. EXISTING 400A POWER CO. METER.
9. EXISTING 3#400KCMIL-3"C.
10. EXISTING SERVICE GUTTER.
11. EXISTING 3#1/0-2"C.
12. EXISTING 1#2(G)-3/4"C TO (2)5/8"DIAX10FT LONG COPPER CLAD STEEL GND DRIVEN ROAD.
13. EXISTING GUTTER 8"X8"XLENGTH AS REQUIRED.
14. EXISTING 3#2 & 1#8(G)-1 1/2"C.
15. EXISTING 2P-100A ENCLOSED BREAKER (22K AIC).
16. EXISTING 2P-150A ENCLOSED BREAKER (22K AIC)
17. EXISTING 3/4"C WITH CONTROL WIRING TO GENERATOR.
18. EXISTING TIME CLOCK 2PST.
19. EXISTING AUTOTRANSFER SWITCH (ATS) 150A, 120/240V, 1ø, (2 POLES).
20. EXISTING 2P-80A ENCLOSED BREAKER (22K AIC).
21. EXISTING 3#3-1 1/4"C.
22. 2P-125A ENCLOSED BREAKER SERVICE RATED (22K AIC).
23. 3#1 & 1#6(G)-2"C.
24. 3#1-2"C.
25. EXISTING 2"EC TO FUTURE ATS LOCATION AT BUILDING EXTERIOR.
26. EXISTING 2P-100A M.C.B.
27. EXISTING 2P-80A M.C.B.
28. EXISTING 3#3 & 1#8(G)-1 1/4"C.
29. 2P-125A M.C.B.
30. 3#2 & 1#8(G)-1 1/2"C.
31. 2P-100A ENCLOSED BREAKERS (22K AIC).
32. 2P-100A M.C.B.
33. 2"EC TO FUTURE ATS LOCATION AT BUILDING EXTERIOR. COORDINATE EXACT LOCATION IN FIELD.

REVISIONS

NO:	DATE:	REMARKS

CONSULTANTS

Jaredian Design Group
Architects, Engineers, Construction Managers
No.33 Dronningens Gade - Queen's Quarter
Post Office Box 6218
St. Thomas, U.S. Virgin Islands 00804
telephone: 340.777.1600 fax: 340.777.1601
e-mail: jaredian2@vipowernet.net

THESE PLANS AND THE DESIGNS CONTAINED HEREIN ARE THE SOLE PROPERTY OF JAREDIAN DESIGN GROUP. THESE PLANS MAY NOT BE REPRODUCED WITHOUT THE WRITTEN PERMISSION OF JAREDIAN DESIGN GROUP. UNAUTHORIZED USE SHALL INVITE A CLAIM FOR COMPENSATION. THE USE BY ANY PERSON OR FIRM OF THESE PLANS OR ANY PART THEREOF SHALL NOT IN ANY WAY SUBJECT JAREDIAN DESIGN GROUP TO ANY COST OR DAMAGES FOR ANY ERROR OR OMISSION CONTAINED THEREIN.

PHASE II RENOVATION TO
PARCEL NO 19A & 20
KONGENS GADE
KINGS QUARTER
ST. THOMAS,
U.S.V.I. 00802-5858

DATE: 08-08-14
DRAWN BY: L.CK.R.B
CHECKED BY: J.P.W.
APPROVED BY: J.P.W.

PROJECT NO: 13-002
CONTRACT NO:

SHEET NO:
E0.1
ELECTRICAL NOTES & PANEL SCHEDULES

REGISTERED ARCHITECT U.S. VIRGIN ISLANDS

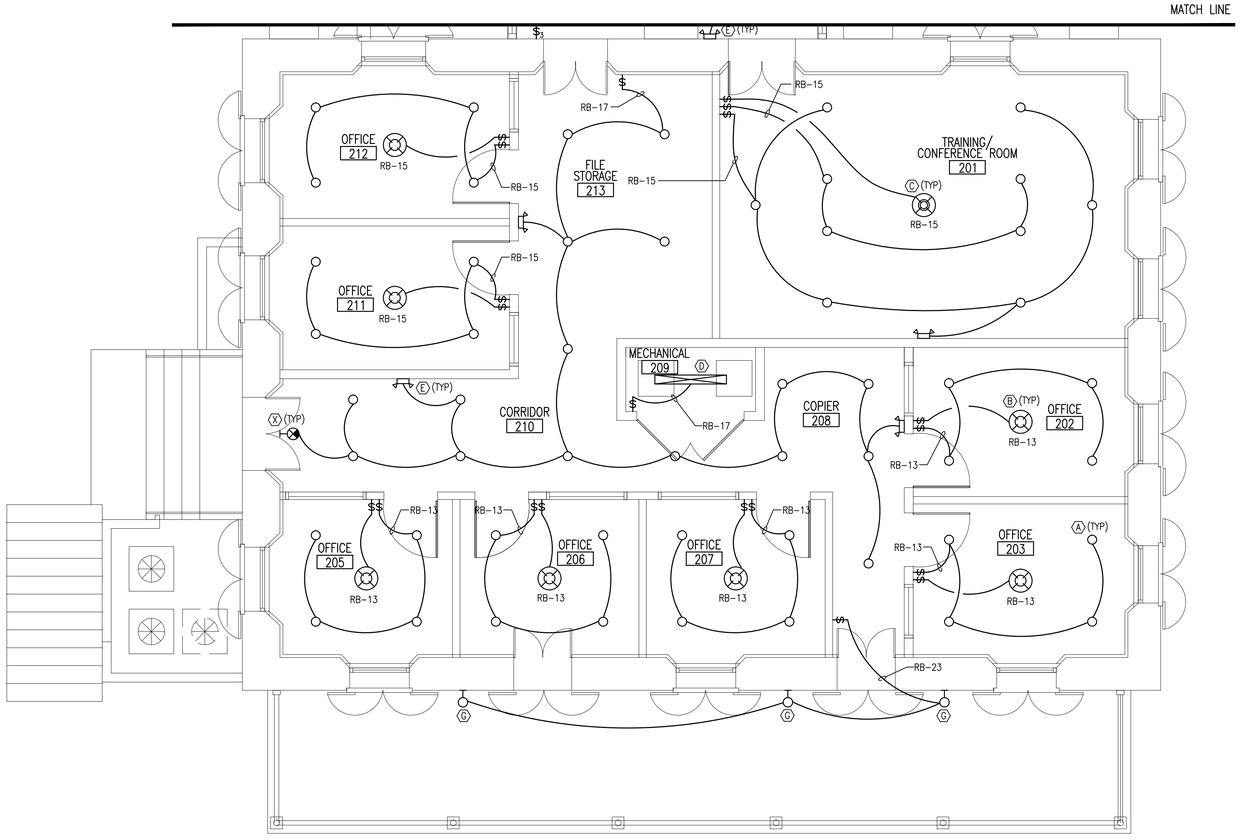

PLAN

N

1	
2E1.1A	2E1.1A

SECOND FLOOR LIGHTING PLAN

SCALE: 1/4"=1'-0"

REVISIONS		
NO:	DATE:	REMARKS

CONSULTANTS

Jaredian Design Group
Architects, Engineers, Construction Managers
No.33 Dronningens Gade - Queen's Quarter
Post Office Box 6218
St. Thomas, U.S. Virgin Islands 00804
telephone: 340.777.1600 fax: 340.777.1601
e-mail: jaredian2@vipowernet.net

THESE PLANS AND THE DESIGNS CONTAINED HEREIN ARE THE SOLE PROPERTY OF JAREDIAN DESIGN GROUP. THESE PLANS MAY NOT BE REPRODUCED WITHOUT THE WRITTEN PERMISSION OF JAREDIAN DESIGN GROUP. UNAUTHORIZED USE SHALL INVITE A CLAIM FOR COMPENSATION. THE USE BY ANY PERSON OR FIRM OF THESE PLANS OR ANY PART THEREOF SHALL NOT IN ANY WAY SUBJECT JAREDIAN DESIGN GROUP TO ANY COST OR DAMAGES FOR ANY ERROR OR OMISSION CONTAINED THEREIN.

PHASE II RENOVATION TO
PARCEL NO 19A & 20
KONGENS GADE
KINGS QUARTER
ST. THOMAS,
U.S.V.I. 00802-5858

DATE: 08-08-14

DRAWN BY: L.C

CHECKED BY: J.P.W.

APPROVED BY: J.P.W.

PROJECT NO: 13-002

CONTRACT NO:

SHEET NO:
2E1.1A

SECOND FLOOR POWER PLAN

REGISTERED ARCHITECT
U.S. VIRGIN ISLANDS

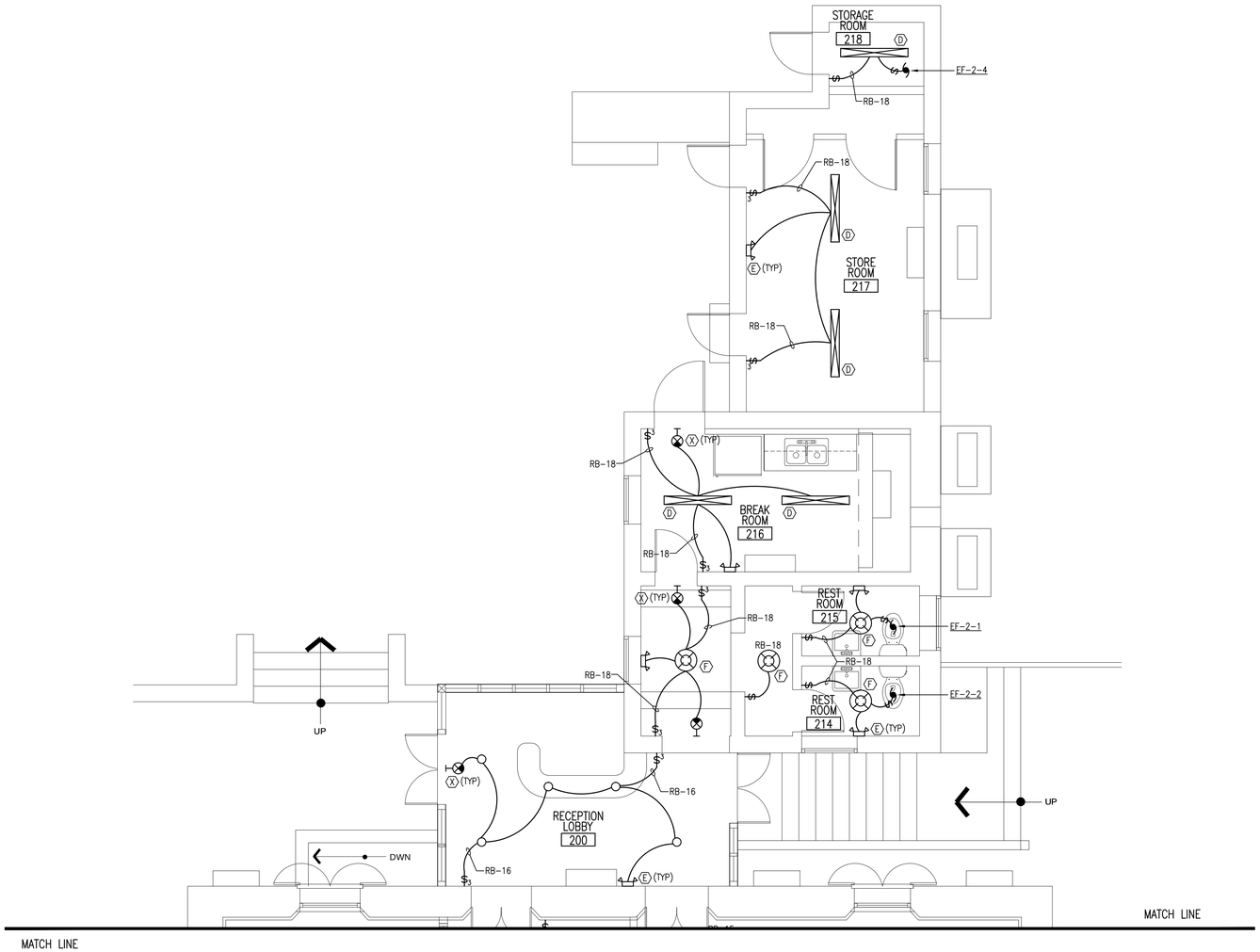

N

PLAN

1	
2E1.1B	2E1.1B

SECOND FLOOR LIGHTING PLAN

SCALE: 1/4"=1'-0"

REVISIONS		
NO:	DATE:	REMARKS

CONSULTANTS

Jaredian Design Group
Architects, Engineers, Construction Managers
No.33 Dronningens Gade - Queen's Quarter
Post Office Box 6218
St. Thomas, U.S. Virgin Islands 00804
telephone: 340.777.1600 fax: 340.777.1601
e-mail: jaredian2@vipowernet.net

THESE PLANS AND THE DESIGNS CONTAINED HEREIN ARE THE SOLE PROPERTY OF JAREDIAN DESIGN GROUP. THESE PLANS MAY NOT BE REPRODUCED WITHOUT THE WRITTEN PERMISSION OF JAREDIAN DESIGN GROUP. UNAUTHORIZED USE SHALL INVITE A CLAIM FOR COMPENSATION. THE USE BY ANY PERSON OR FIRM OF THESE PLANS OR ANY PART THEREOF SHALL NOT IN ANY WAY SUBJECT JAREDIAN DESIGN GROUP TO ANY COST OR DAMAGES FOR ANY ERROR OR OMISSION CONTAINED THEREIN.

PHASE II RENOVATION TO
PARCEL NO 19A & 20
KONGENS GADE
KINGS QUARTER
ST. THOMAS,
U.S.V.I. 00802-5858

DATE: 08-08-14
DRAWN BY: L.CK.R.B
CHECKED BY: J.P.W.
APPROVED BY: J.P.W.

PROJECT NO: 13-002
CONTRACT NO:

SHEET NO:
2E1.1B
SECOND FLOOR POWER PLAN

REGISTERED ARCHITECT U.S. VIRGIN ISLANDS

KEY NOTES

1. 3/4" EC TO EXISTING TEL. BKBD.
2. SERVICE SWITCH MOTOR RATED TO BE MOUNTED ADJACENT TO THE UNIT. COORDINATE WITH MECHANICAL DRAWINGS FOR EXCAT LOCATION.
3. CONTRACTOR SHALL ROUTE POWER AND CONTROL LINES ALONG SIDE REFRIGERANT LINES. COORDINATE WITH MECHANICAL DRAWINGS AND A/C MANUFACTURER'S RECOMMENDATIONS.
4. 4#12 – 1/2"C TO MCU.

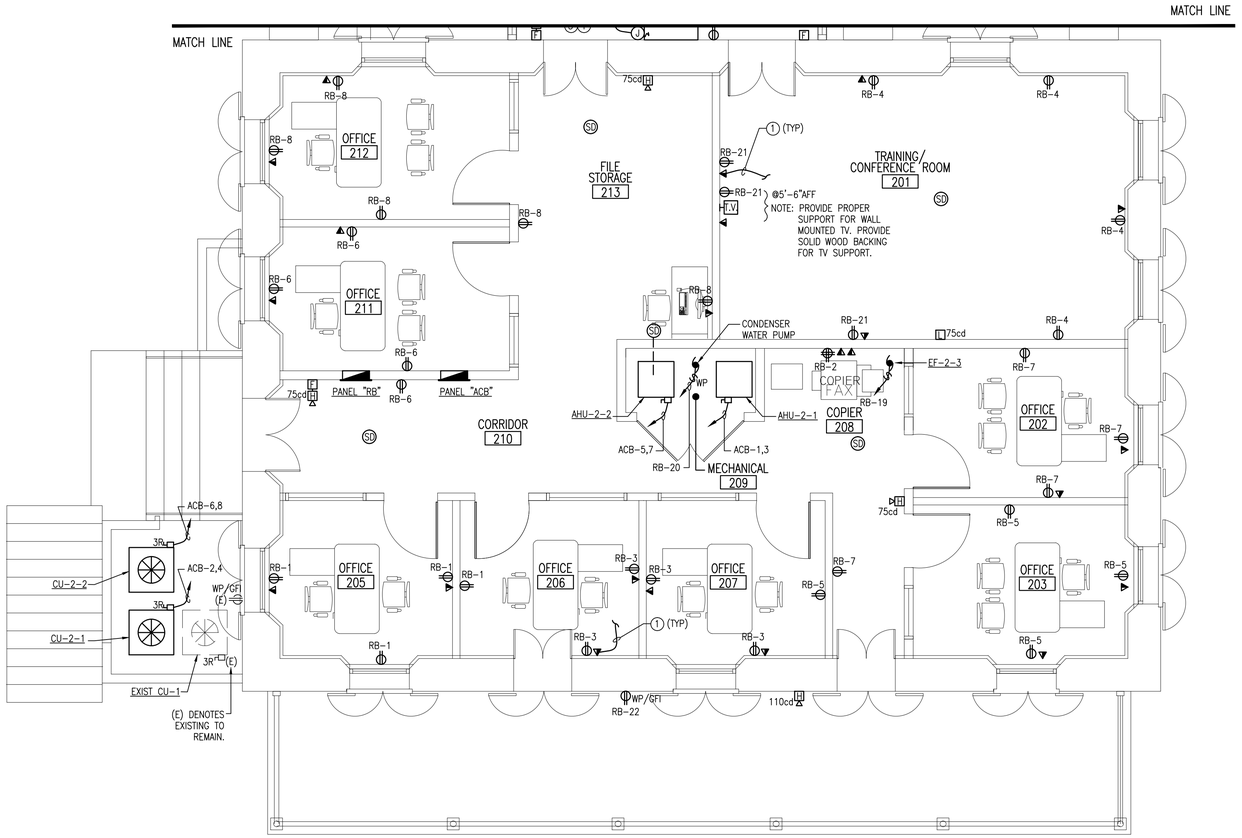

PLAN

1	
2E1.2A	2E1.2A

SECOND FLOOR POWER PLAN

SCALE: 1/4"=1'-0"

REVISIONS		
NO:	DATE:	REMARKS

CONSULTANTS

Jaredian Design Group
Architects, Engineers, Construction Managers
No.33 Dronningens Gade - Queen's Quarter
Post Office Box 6218
St. Thomas, U.S. Virgin Islands 00804
telephone: 340.777.1600 fax: 340.777.1601
e-mail: jaredian2@vipowernet.net

THESE PLANS AND THE DESIGNS CONTAINED HEREIN ARE THE SOLE PROPERTY OF JAREDIAN DESIGN GROUP. THESE PLANS MAY NOT BE REPRODUCED WITHOUT THE WRITTEN PERMISSION OF JAREDIAN DESIGN GROUP. UNAUTHORIZED USE SHALL INVITE A CLAIM FOR COMPENSATION. THE USE BY ANY PERSON OR FIRM OF THESE PLANS OR ANY PART THEREOF SHALL NOT IN ANY WAY SUBJECT JAREDIAN DESIGN GROUP TO ANY COST OR DAMAGES FOR ANY ERROR OR OMISSION CONTAINED THEREIN.

PHASE II RENOVATION TO
PARCEL NO 19A & 20
KONGENS GADE
KINGS QUARTER
ST. THOMAS,
U.S.V.I. 00802-5858

DATE: 08-08-14
DRAWN BY: L.C
CHECKED BY: J.P.W.
APPROVED BY: J.P.W.

PROJECT NO: 13-002
CONTRACT NO:

SHEET NO:
2E1.2A
SECOND FLOOR POWER PLAN

REGISTERED ARCHITECT
U.S. VIRGIN ISLANDS

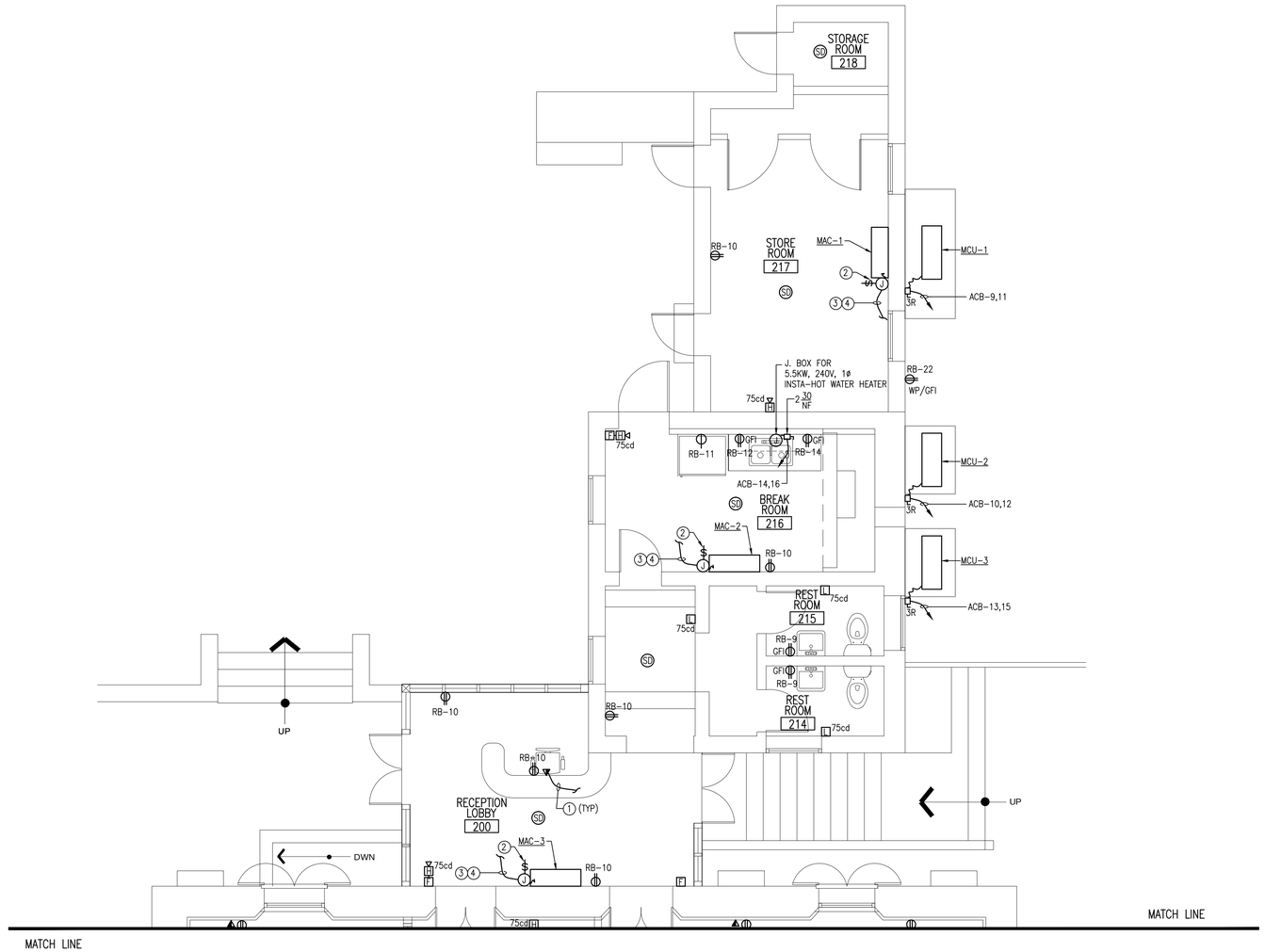

KEY NOTES

1. 3/4" EC TO EXISTING TEL. BKBD.
2. SERVICE SWITCH MOTOR RATED TO BE MOUNTED ADJACENT TO THE UNIT. COORDINATE WITH MECHANICAL DRAWINGS FOR EXCAT LOCATION.
3. CONTRACTOR SHALL ROUTE POWER AND CONTROL LINES ALONG SIDE REFRIGERANT LINES. COORDINATE WITH MECHANICAL DRAWINGS AND A/C MANUFACTURER'S RECOMMENDATIONS.
4. 4#12 – 1/2"C TO MCU.

N

PLAN

1	
2E1.2B	2E1.2B

SECOND FLOOR POWER PLAN

SCALE: 1/4"=1'–0"

REVISIONS		
NO:	DATE:	REMARKS

CONSULTANTS

Jaredian Design Group
Architects, Engineers, Construction Managers
No.33 Dronningens Gade - Queen's Quarter
Post Office Box 6218
St. Thomas, U.S. Virgin Islands 00804
telephone: 340.777.1600 fax: 340.777.1601
e-mail: jaredian2@vipowernet.net

THESE PLANS AND THE DESIGNS CONTAINED HEREIN ARE THE SOLE PROPERTY OF JAREDIAN DESIGN GROUP. THESE PLANS MAY NOT BE REPRODUCED WITHOUT THE WRITTEN PERMISSION OF JAREDIAN DESIGN GROUP. UNAUTHORIZED USE SHALL INVITE A CLAIM FOR COMPENSATION. THE USE BY ANY PERSON OR FIRM OF THESE PLANS OR ANY PART THEREOF SHALL NOT IN ANY WAY SUBJECT JAREDIAN DESIGN GROUP TO ANY COST OR DAMAGES FOR ANY ERROR OR OMISSION CONTAINED THEREIN.

PHASE II RENOVATION TO
PARCEL NO 19A & 20
KONGENS GADE
KINGS QUARTER
ST. THOMAS,
U.S.V.I. 00802–5858

DATE: 08–08–14
DRAWN BY: L.CK.R.B
CHECKED BY: J.P.W.
APPROVED BY: J.P.W.

PROJECT NO: 13–002
CONTRACT NO:

SHEET NO:
2E1.2B
SECOND FLOOR POWER PLAN

REGISTERED ARCHITECT U.S. VIRGIN ISLANDS