Form No. DPP-IFB-55-75
APPROVED Com. DPP
October 30, 1974
REVISED: 3-18-08

GOVERNMENT OF
THE VIRGIN ISLANDS OF THE UNITED STATES
_____o_____

DEPARTMENT OF PROPERTY AND PROCUREMENT
_____o_____

INVITATION FOR BIDS

_____o_____

Invitation No. IFB038DPWT20 (C) Date: June 11, 2020

Pursuant to Laws of the Government of the Virgin Islands sealed bids for the work described herein will be received no later than **Tuesday, July 14, 2020, at 10:00 a.m. at the Department of Property and Procurement** and **publicly open at 10:15 a.m**. Bids can be submitted at the address: **8201 Subbase, 3rd Floor**, **St. Thomas, Virgin Islands 00802** or via Email submission at: **ebids_proposals@dpp.vi.gov**

Description of Work and Project Number: IFB038DPWT20 (C)- **Reconstruction of the Department of Public Works 2nd Floor Offices, located in Susannaberg, St. John Virgin Islands.**

Cost Per Set: $100.00 NON-REFUNDABLE

Liquidated Damages: $100.00 / calendar day

Completion time of Work: 100 calendar days

TIMETABLE

Pre-Bid Conference: **Wednesday, June 24, 2020,** at **10:30 a.m**. via Teleconference Call. **Site Visit Information will be provided during the Pre-Bid.**

Request for Information: Last day for request for written clarification will be **Monday, June 29, 2020 at 12:00 noon.** Atlantic Standard Time.

Due Date: The bids will be accepted at the Department of Property and Procurement no later than **Tuesday, July 14, 2020** at **10:00 a.m.** Atlantic Standard Time and then publicly **open at 10:15 a.m.**

Information regarding bidding documents

Bidding Documents include the Public Notice, this Invitation to Bid, Non-Collusion Affidavit, Instruction to Bidders, Contractor's Qualification and Financial Statement, the Contract, Performance and Payment Bonds, Bid documents, General Provisions, Special Provision, Supplemental Specifications, Bid Schedule, Plan and Specifications. All documents may be obtained from the Department of Property and Procurement at the cost stated above or download a free copy at http://dpp.vi.gov under project advertisements.

Each bid must be accompanied by a Bid Guarantee as provided for in Form No. P&P-ITB-CC-16-73 (Instruction to Bidders) which is hereby made a part of this Invitation and by this reference incorporated herein as fully and effectively as if set forth in detail.

The Bid Guarantee for bidders will be Five (5%) per cent of the bid price. Bid Guarantee will be in the form of a Bond (Corporate or Individual Surety), Money Order, Certified Check, or Irrevocable Letter of Credit. The bid bond form provided in the bid document must be properly filled out to accompany checks and money orders. **Failure to provide a Five (5%) percent bond will render the bid unresponsive**.

No Bidder will be allowed to withdraw his bond within a period of thirty (30) calendar days following the date set for the opening thereof.

Contractor's Statement

Each bidder **must** submit with his/her bid an executed copy of a Contractor's Qualification and Financial Statement which is hereby made a part of this Invitation for Bids and by this reference incorporated herein as fully and effectively as if set forth in detail.

Virgin Islands Business License

Each bidder **must** submit with his/her bid a valid Virgin Islands Business License listing General Construction Co. or Construction Contractor as the Types of License (s).

Non-Collusion

Each bidder **must** submit with his/her bid a notarized copy of the Non- Collusion Affidavit which is hereby made a part of this Invitation for Bids and by this reference incorporated herein as fully and effectively as if set forth in detail.

BONDS:

A Bid Bond, Performance and Payment Bond each are required as follows:

Bid Bond:	5% of the Contract
Performance Bond:	100% of the Contract
Payment Bond:	100% of the Contract

SUBMISSION OF BIDS- HAND-CARRIED

1. All interested parties shall submit ***one (1)*** original and ***four (4)*** copy sets of bids, which are to be delivered to the Department of Property and Procurement no later than **Tuesday, July 14, 2020 at 10:00 a.m.** Atlantic Standard Time.

They shall be addressed to:
Anthony D. Thomas
Commissioner
Department of Property & Procurement
8201 Subbase, 3rd Floor
St. Thomas, Virgin Islands

THE SEALED ENVELOPE CONTAINING THE BIDS MUST HAVE THE FOLLOWING INFORMATION WRITTEN ON THE OUTSIDE OF THE ENVELOPE OR PACKAGE:

SEALED BIDS-DO NOT OPEN
IFB038DPWT20 (C)
(Name of Bidder)
(Mailing Address of Bidder)
(Telephone Number of Bidder)
(Email Address of Bidder)

SUBMISSION OF BIDS- ELECTRONIC SUBMISSIONS

2. All interested parties shall submit an ***electronic submission*** to ebids_proposals@dpp.vi.gov no later than **Tuesday, July 14, 2020, at 10:00 a.m.** Atlantic Standard Time.

   Electronic submissions must also include the **Company's Name-Solicitation Number and Due Date.** The second page of each electronic

submission **must only contain** the following words in red font: "CONFIDENTIAL BID SUBMISSION"

THE ELECTRONIC SUBMISSION OF BIDS MUST HAVE THE FOLLOWING INFORMATION TYPED INTO THE SUBJECT LINE OF EMAIL:

It shall be the bidder's responsibility to deliver bids to the Department of Property and Procurement before the date and time set for the closing of acceptance of bids. Bids received after the official deadline will be considered **LATE** and will **NOT** be considered.

Pre-Bid and Open-Bid Meeting Information

Teleconference Call

Dial-In Number: 1(712) 451-0422

Access Code: 164896

PROJECT MANUAL

DEPARTMENT OF PUBLIC WORKS

PUBLIC WORKS OFFICE 2ND FL RECONSTRUCTION

INTERSECTION OF RT 10 AND RT 104,
SUSANNABERG
ST. JOHN, UNITED STATES VIRGIN ISLANDS

Nelson M. Petty Jr., P.E., Commissioner
GOVERNMENT OF THE VIRGIN ISLANDS
DEPARTMENT OF PUBLIC WORKS NO.8244
SUB BASE
ST. THOMAS, UNITED STATES VIRGIN ISLANDS 00802-5805
TELEPHONE: 340-776-4844

SECTION 0 – INDEX

DEPARTMENT OF PUBLIC WORKS, **PUBLIC WORKS OFFICE 2ND FL RECONSTRUCTION**
INTERSECTION OF RT 10 AND RT 104, SUSANNABERG
ST. JOHN, UNITED STATES VIRGIN ISLANDS

DIVISION 0 INVITATION FOR BID REQUIREMENTS

SECTION NUMBER	TITLE
SECTION 0	INDEX
SECTION 1	INVITATION FOR BIDS
SECTION 2	BID SHEET

DIVISION 1 - GENERAL REQUIREMENTS

SECTION NUMBER	TITLE
01000	SUMMARY
01020	ALLOWANCES
01039	COORDINATION MEETINGS
01045	CUTTING AND PATCHING
01095	REFERENCE STANDARDS AND DEFINITIONS
01200	PRICE AND PAYMENT PROCEDURES
01300	SUBMITTALS
01325	CONSTRUCTION PROGRESS SCHEDULE
01400	QUALITY CONTROL
01600	MATERIAL AND EQUIPMENT HANDLING
01620	TRANSPORTATION AND HANDLING
01630	STORAGE AND PROTECTION
01700	CONTRACT CLOSEOUT
01710	CLEANUP
01730	GUARANTEES AND WARRANTIES
01780	CLOSEOUT SUBMITTALS

DIVISION 2 - EXISTING CONDITIONS

SECTION NUMBER	TITLE
024119	SELECTIVE DEMOLITION

DIVISION 3 - CONCRETE

SECTION NUMBER	TITLE
03346	CAST IN PLACE CONCRETE
03900	CONCRETE RESTORATION AND CLEANING

DIVISION 5 - METALS

SECTION NUMBER	TITLE
05300	COLD FORMED METAL FRAMING
05500	MISCELLANEOUS METAL WORK

DIVISION 6 - WOODS AND PLASTICS

SECTION NUMBER	TITLE
06100	ROUGH CARPENTRY
064000	ARCHITECTURAL WOODWORK
064100	ARCHITECTURAL WOOD CASEWORK
066116	SOLID SURFACING FABRICATIONS

DIVISION 7 - THERMAL AND MOISTURE PROTECTION

SECTION NUMBER	TITLE
07130	SELF ADHESIVE WATERPROOFING MEMBRANE

07210 BUILDING INSULATION
07900 JOINT SEALERS

DIVISION 8 - DOORS AND WINDOWS

SECTION NUMBER TITLE

08110 STEEL FRAMES
08111 STANDARD STEEL DOORS
08211 FLUSH WOOD DOORS
08710 DOOR HARDWARE

DIVISION 9- FINISHES

SECTION NUMBER TITLE

09253 SALT RETAINING WATER REPELLENT RENOVATION STUCCO
09255 GYPSUM BOARD ASSEMBLIES
09300 TILE
09511 ACOUSTICAL PANEL CEILINGS
09772 SILICATE COATINGS
099300 STAINING AND TRANSPARENT FINISHING
09900 PAINTING

DIVISION 22 - PLUMBING

SECTION NUMBER TITLE

220517 SLEEVES AND SEALS PLUMBING PIPE
220523 GENERAL DUTY VALVES FOR PLUMBING PIPE
220553 IDENTIFICATION FOR PLUMBING PIPING AND EQUIPMENT
221119 POTABLE WATER PIPING SPECIALTIES
221316 SANITARY WATER AND VENT PIPING
224000 PLUMBING FIXTURES
224216 COMMERCIAL SINKS AND FAUCETS

DIVISION 23 - HEATING, VENTILATION AND AIR CONDITIONING

SECTION NUMBER TITLE

230513 COMMON MOTOR REQUIREMENTS FOR HVAC EQUIPMENT
230517 SLEEVES AND SLEEVE SEALS FOR HVAC PIPING
230529 HANGERS AND SUPPORTS FOR HVAC PIPING AND EQUIPMENT
230548 VIBRATION CONTROLS FOR HVAC PIPING AND EQUIPMENT
230553 IDENTIFICATION FOR HVAC PIPING AND EQUIPMENT
230593 TEST, ADJUST, AND BALANCING HVAC
230713 DUCT AND INSTALLATION
230719 HVAC PIPING INSULATION
232300 REFRIGERATION PIPING
233113 METAL DUCTS
233300 AIR DUCT ACCESSORIES
233423 HVAC POWER VENTILATORS
233713 DIFFUSERS, REGISTERS, AND GRILLES
236200 PACKAGED COMPRESSORS AND CONDENSER UNITS
238126 SPLIT-SYSTEM AIR-CONDITIONERS

DIVISION 26 - ELECTRICAL

SECTION NUMBER TITLE

260500 BASIC ELECTRICAL MATERIALS AND METHODS
260510 COMMON WORK RESULTS FOR ELECTRICAL

260519	LOW-VOLTAGE ELECTRICAL POWER CONDUCTORS AND CABLES
260526	GROUNDING AND BONDING FOR ELECTRICAL
260533	RACEWAY AND BOXES FOR ELECTRICAL SYSTEMS
260548	VIBRATION AND SEISMIC CONTROLS FOR ELECTRICAL SYSTEMS
260553	IDENTIFICATION FOR ELECTRICAL SYSTEMS
260923	LIGHTING CONTROL DEVICES
262416	PANELBOARDS
262726	WIRING DEVICES
262816	ENCLOSED SWITCHES AND CIRCUIT BREAKERS
265100	INTERIOR LIGHTING
265600	EXTERIOR LIGHTING

DIVISION 27 - COMMUNICATION

SECTION NUMBER	TITLE
270000	COMMUNICATIONS
270500	COMMON WORK RESULTS FOR COMMUNICATIONS
270256	GROUNDING AND BONDING FOR COMMUNICATION SYSTEMS
270528	PATHWAYS FOR COMMUNICATION SYSTEMS
271100	COMMUNICATIONS EQUIPMENT ROOM FITTINGS
271300	COMMUNICATIONS BACKBONE CABLING
271333	COMMUNICATIONS COAXIAL BACKBONE CABLING
271333.13	COMMUNICATIONS COAXIAL SPLICING AND TERMINATIONS
271500	COMMUNICATIONS HORIZONTAL CABLING
272000	COMMUNICATION DISTRIBUTION SYSTEMS
275313	KRONOS TIME CLOCK

DIVISION 28 - ELECTRONIC SAFETY AND SECURITY

SECTION NUMBER	TITLE
280500	COMMON WORK RESULTS FOR ELECTRONIC SAFETY AND SECURITY
280513	CONDUCTORS AND CABLES FOR ELECTRONIC SAFETY AND SECURITY
280528	PATHWAYS FOR ELECTRONIC SECURITY

SECTION 2 – SCHEDULE OF PRICES
DEPARTMENT OF PUBLIC WORKS, **PUBLIC WORKS OFFICE 2ND FL RECONSTRUCTION**
INTERSECTION OF RT 10 AND RT 104, SUSANNABERG
ST. JOHN, UNITED STATES VIRGIN ISLANDS

	DESCRIPTION	UNIT	QUANTITIY	UNIT PRICE	EXTENSION	TOTAL LABOR	TOTAL MATERIAL
	DIVISION 1 – GENERAL REQUIREMENTS						
1	GENERAL CONDITIONS (10% MAXIMUM OF BID)	LS	1				
2	MOBILIZATION (10% MAXIMUM OF BID)	LS	1				
	DIVISION 2 – EXISTING CONDITIONS						
3	SELECTIVE DEMOLITION – INTERIOR WALLS	LF	40				
4	SELECTIVE DEMOLITION – MASONRY WALL OPENINGS	LS	1				
5	SELECTIVE DEMOLITION – WINDOWS	EA	10				
6	SELECTIVE DEMOLITION – BREAK ROOM/BATH TOILET, FIXTURES, SINKS AND CABINTRY	LS	1				
7	SELECTIVE DEMOLITION - FLOOR TILES	SQFT	1,200				
	DIVISION 3 – CONCRETE						
8	CONCRETE STAIR ASSEMBLY	LS	1				
9	CONCRETE SUPPORT WALL	LS	1				
	DIVISION 5 – METALS						
10	POWDER COATED ALUMINUM HANDRAIL ASSEMBLY	LF	65				
	DIVISION 6 – WOODS AND PLASTICS						
11	BREAK ROOM AND BATHROOM CASE WORK TO INCLUDE CABINETRY AND COUNTER TOPS	LS	1				
12	5" WOOD BASE BOARD	LF	330				
13	2 1/2" WOOD TRIM AROUND INTERIOR DOORS AND WINDOWS	LF	410				
	DIVISION 7 – THERMAL AND MOISTURE PROTECTION						
14	MOISTURE PROTECTION ON INSIDE OF EXTERIOR WALLS	SQFT	1,200				
15	1-5/8" BATT INSULATION	SQFT	1,200				
	DESCRIPTION	**UNIT**	**QUANTITIY**	**UNIT**	**EXTENSION**	**TOTAL**	**TOTAL**

				PRICE		LABOR	MATERIAL
	DIVISION 7 – THERMAL AND MOISTURE PROTECTION - continued						
16	JOINT SEALER AROUND ALL EXTERIOR WINDOWS AND DOORS	LF	230				
	DIVISION 8 – DOORS AND WINDOWS						
17	SOLID CORE INTERIOR DOORS INCLUDING HARDWARE AND SWEEP	EA	6				
18	36"X80" EXTERIOR METAL DOORS INCLUDING HARDWARE, SWEEP, CLOSER AND THRESHOLD	EA	2				
19	WINDOWS WITH INTEGRATED HURRICANE SHUTTERS	EA	10				
20	ROLL DOWN EXTERIOR SHUTTER	LS	1				
	DIVISION 9 – FINISHES						
21	INSTALL 3 5/8 STUDS AND 5/8" MOISTURE RESISTANT GYPSUM BOTH SIDES (INTERIOR WALLS)	LS	1				
22	1-5/8" FURRED WALL WITH 5/8" MOISTURE RESISTANT GYSPUM (EXTERIOR WALLS)	SQFT	1,200				
23	INSTALL NEW PORCELAIN TILE	SQFT	1,250				
24	INSTALL NEW PORCELAIN TILE BATHROOM WALLS	SQFT	220				
25	INSTALL NEW 2'X2' INSULATED ACOUSTIC CEILING TILES AND GRID SYSTEM	SQFT	1,250				
26	PLASTER FINISH AND REPAIRS ON EXTERIOR WALLS	LS	1				
27	OAK STAIN WOOD TRIM	LF	740				
28	PAINT INTERIOR WALLS	SQFT	2,700				
29	PAINT EXTERIOR OF BUILDING	SQFT	3,000				
	DESCRIPTION	**UNIT**	**QUANTITIY**	**UNIT PRICE**	**EXTENSION**	**TOTAL LABOR**	**TOTAL MATERIAL**

	DIVISION 21 – FIRE SUPPRESSION						
30	ABC RATED 25 LB FIRE EXTINGUISHERS	EA	4				
	DIVISION 22 – PLUMBING						
31	BREAK ROOM PLUMBING INCLUDING SUPPLY LINES, VALVES, 2 BOWL SINK, FIXTURES, AND TOWEL HOLDER IN KITCHEN	LS	1				
32	BATHROOM PLUMBING INCLUDING SUPPLY LINES, VALVES, SINK, LOW FLOW ELONGATED TOILET, TOILET PAPER HOLDER, MIRROR, GRAB BAR, TOWEL DISPENSER	LS	1				
33	220V ON DEMAND ELECTRIC WATER HEATER MOUNTED IN CEILING INCLUDING ELECTRICAL AND PLUMBING CONNECTIONS	EA	1				
	DIVISION 23 – HEATING, VENTILATION AND AIR CONDITIONING						
34	MECHANICAL SYSTEM COMPLETE: DUCTWORK, HANGERS, DIFFUSERS, REGISTERS, GRILLS, LOUVERS, WALL CUTS, THERMOSTAT AND CONTROLS	LS	1				
35	BATHROOM EXHAUST FAN - BIRD SCREEN, 6" DUCT AND 4" GOOSNECK THROUGH ROOF, RUBBER BOOT, TIME CLOCK OR PROGRAMMABLE T-STAT	EA	1				
36	3 1/2 TONSPLIT A/C SYSTEM - DRAINS, ELECTRICAL DISCONNECT, FACTORY APPLIED CORROSION RESISTANCE COATING OF CONDENSOR COILS	EA	1				
	DIVISION 26 – ELECTRICAL						
37	ELECTRICAL WIRING, PATHWAYS AND HANGERS	LS	1				
	DESCRIPTION	**UNIT**	**QUANTITIY**	**UNIT PRICE**	**EXTENSION**	**TOTAL LABOR**	**TOTAL MATERIAL**
	DIVISION 26 – ELECTRICAL - Continued						

38	200 AMP ELECTRICAL PANEL BOARD	EA	1				
39	RECESSED INTERIOR LED LIGHT FIXTURES AND LAMPS	EA	25				
40	HONEYWELL LED WALL PACK SECURITY LIGHT ASSEMBLY	EA	3				
41	CEILING MOUNTED LED LIGHT FIXTURES	EA	6				
42	WALL MOUNTED SCONCE	EA	1				
43	EXTERIOR LED LIGHT FIXTURES AND LAMPS	EA	6				
44	ELECTRICAL BOXES, OUTLETS, SWITCHES AND FACE PLATES	EA	40				
	DIVISION 27 – COMMUNICATIONS						
45	TELEPHONE SYSTEM WIRING, PATHWAYS AND HANGERS	LS	1				
46	INTERNET SYSTEM WIRING, PATHWAYS AND HANGERS	LS	1				
47	COAXIAL CABLE TV WIRING	LS	1				
48	TELEPHONE/DATA ACCESS POINT IN 4" X 4" BOX AND FACE PLATE	EA	8				
49	COAXIAL CABLE TV OUTLET IN 4" X 4" BOX AND FACE PLATE	EA	3				
50	ISOLVED VELOCITY 850E BIOMETRIC TIME CLOCK	EA	1				
	DIVISION 28 – ELECTRONIC SAFETY AND SECURITY						
51	HARDWIRED SMOKE DETECTORS WITH BATTERY BACKUP	EA	5				
52	THERMOPLASTIC LED EXIT LIGHT WITH BATTERY BACKUP	EA	2				

TOTAL BID _____ _____ _____

PART 1 GENERAL

1.1 PROJECT

A. Project Name:

DEPARTMENT OF PUBLIC WORKS, PUBLIC WORKS OFFICE 2ND FL RECONSTRUCTION, INTERSECTION OF RT 10 AND RT 104, SUSANNABERG, ST. JOHN, UNITED STATES VIRGIN ISLANDS

B. Owner's Name:
VIRGIN ISLANDS GOVERNMENT. DEPARTMENT OF PUBLIC WORKS

C. Plan Designer's Name:
Department of Public Works

D. The complete Project consists of the reconstruction of the Public Works Office, 2nd Floor, in Susannaberg, St. John. This construction shall include demolition and construction of doors, windows, floors, walls, ceilings, electrical system, data system, security and painting as shown in the construction drawings prepared by the Department of Public Works.

E. Owner will remove the following items before start of work:

1. N/A

1.2 SALVAGE BY CONTRACTOR

A. Contractor shall remove and store the following, for later reinstallation by Contractor, prior to start of work:

1. N. A.

1.3 WORK BY OTHERS

A. N.A.

1.4 OWNER FURNISHED PRODUCTS

A. Products furnished by Owner include the following categories:

1. OFCI:
Owner furnished Contractor installed.

2. OFCR:
Owner furnished Contractor rough-in:

3. OFOI:
Owner furnished Owner Installed.

B. Owner Responsibilities for products in the following category:

OFCI

1. Arrange installation inspections required by regulatory agencies having jurisdiction.

C. Contractor's Responsibilities (for all categories unless otherwise noted): OFCR;

1. Coordinate installation of Owner furnished products with other portions of the Work.

2. Designate submittal and delivery date for each product affecting construction schedule.

3. Review submittals of Owner furnished products and verify rough-in requirements prior to installation for products in the following categories:

   a. OFCI

   b. OFCR
   Notify Owner's Representative of discrepancies that would affect installation and rough-ins.

4. Promptly inspect products jointly with the Owner, record shortages, damaged or defective products listed in the following categories:

   c. OFCI

5. Protect products from damage after installation.

   d. The sink and the cabinetry in the Break Room are to remain.

6. Assemble, install connect, adjust, test and calibrate, and finish products listed in the following category:

   e. OFCI.

7. Provide mechanical, plumbing and electrical connections to Contractor installed products including installation of service fixtures for products listed in the following categories:

   f. OFCR

   g. OFCI.

8. Afford Owner's forces a reasonable opportunity for delivery and storage of their products and the execution of their work. Where required, Construction Manager shall properly connect his work to that installed by the Owner's forces.

9. Repair or replace items damaged by Construction Manager.

10. Receive and unload products at the site for products listed in the following categories:

    h. OFCI

i. OFCR.

11. Handle products at the site, including uncrating and storage for products listed in the following categories:

j. OFCI

k. OFCR.

1.5 CONTRACTOR FURNISHED PRODUCTS

A. Products furnished by Contractor consist of products listed in the following category:

1. CFCI.

B. Contractor's responsibilities:

1. As indicated in the Construction Documents.

1.6 OWNER OCCUPANCY

A. Owner intends to occupy the Project by the date stated in the Agreement as the contract completion date.

B. Cooperate with Adjacent Property Owners to minimize conflict and to facilitate the adjacent Landowner's operations with the least amount of inconvenience.

C. Contractor shall take precautions to avoid excessive noise or vibration that would disturb Adjacent Property owners' operations. When directed by Owner, Contractor shall perform certain operations at designated time of day or night in order to minimize disturbance to Owner's operations.

D. Schedule the Work to accommodate Owner occupancy.

1.7 CONTRACTOR USE OF SITE AND PREMISES

A. Construction Operations are limited to areas permitted by Law, Ordinances, Permits and Contract Documents.

B. Arrange use of site and premises to allow:

1. Owner occupancy and operation.

2. Use of adjacent sites by the public.

C. Do not unreasonably encumber site or premises with materials or equipment.

D. Limit use of site and premises for Work and storage as follows:

1. Maintain Owner and public access to existing building, parking, drives and walks at all times.

2. Restrict work and storage to construction areas indicated on Drawings.

3. Existing parking areas may not be used for storage.

4. Access site only as indicated on the Drawings.

5. Restrict parking to areas designated by the Owner.

6. Do not perform operations that would disrupt or delay Owner's daily operations.

7. Restrict construction personnel from access to other areas of the site and existing building, except as required to perform new and alterations work.

E. Assume full responsibility for protection and safekeeping of products stored on premises.

F. Relocate stored products which interfere with operations of Owner.

G. Do not load structure with weight that will endanger structure.

H. Emergency Building/Site Exits during Construction:

1. Keep all existing site exits open during construction period.

2. Provide barricade and signage in accordance with all requirements of the local building authorities during construction.

I. Utility Outages and Shutdown:
To be scheduled with the Owner's representative prior to implementing.

1.8 WORK SEQUENCE

A. Coordinate construction schedule and operations with Owner.

1.9 BID SCHEDULE

A. The Contract Scope is a Unit Price offer to include the entire Scope Of Work described in the Contract Documents. The Contractor shall complete the Bid Schedule included in the Contract Documents and submit it with their bid. The Bid Schedule is representative of a breakdown of major scope items. Items shown in the Contract Documents, but not specifically shown in the Bid Schedule are also included in the Contract Cost.

PART 2 PRODUCTS- NOT USED

PART 3 EXECUTION- NOT USED

END OF SECTION

PART 1 - GENERAL

1.1 - GENERAL CONDITIONS

A. This item covers general project requirements for documentation, meetings, material certifications, certified payrolls, safety tape, marking paint, chalk, barricades, OSHAA compliance, management of crews and subcontractors, insurance, project photos, as-built drawings, temporary power, shop drawings, organizing operations to allow adjacent usage by the public, maintaining drives and walks for access to the site, compliance with laws and ordinances, securing and paying for necessary permits, and supplying miscellaneous materials required for construction.

1.2 MOBILIZATION

A. This item covers preparation of secure areas to accept storage of materials and equipment, mobilization of crews and construction materials, and transportation of equipment and scaffolding.

B. Demobilization and cleanup of the staging areas.

PART 2 - PRODUCTS- NOT USED

PART 3 - PAY ITEMS

A. The General Conditions pay item will be limited to ten percent (10%) of the contract value.

B. The Mobilization pay item will be limited to ten percent (10%) of the contract value.

3. Fifty percent (50%) will be paid upon contract execution.

4. Twenty-five percent (25%) will be paid upon construction start.

5. Twenty-five percent (25%) will be paid upon demobilization and site cleanup.

END OF SECTION

PART 1 - GENERAL

1.1 SECTION INCLUDES

A. Coordination and project conditions.

B. Field engineering.

C. Preconstruction meeting.

D. Site mobilization meeting.

E. Progress meeting.

F. Pre-installation meetings.

G. Equipment electrical characteristics and components.

H. Examination.

I. Preparation.

J. Cutting and Patching.

K. Alteration project procedures.

1.2 RELATED SECTIONS (NOT USED)

1.3 COORDINATION AND PROJECT CONDITIONS

A. Coordinate scheduling, submittals, and Work of the various sections of the Specifications to ensure an efficient and orderly sequence of construction elements.

B. Verify all existing utility locations.

1.4 FIELD ENGINEERING

A. Contractor shall locate and protect all survey control and reference points, and shall accurately replace and have verified by the Engineer any such point, which is damaged or moved, at his own expense.

B. Control datum for survey is as that shown on Drawings. The survey shall establish certain reference points and benchmarks in the immediate vicinity of the work areas. The Contractor shall lay out all additional lines and grades and otherwise do all layout and measurements necessary for the proper completion of the work.

C. Verify setbacks and easements; confirm drawings dimensions and elevations.

D. Provide field engineering services. Establish elevations, lines, and levels, utilizing recognized engineering survey practices.

E. The Contractor shall furnish assistance to the Engineer as requested to check the layout or otherwise control the work. Such assistance shall be understood to include the provision of suitable manpower to assist the Engineer in taping measurements, holding a survey rod for checking grades and the like.

F. The Engineer reserves the right to inspect or check any of this work, and the Contractor shall not claim added compensation for any delay occasioned by required as a result of the Engineer's inspections.

1.5 PRECONSTRUCTION MEETING

A. Owner will schedule a meeting after Notice of Award.

B. Attendance Required:
Owner, Owner's Construction Representative, Designer, and Contractor.

C. Agenda:

1. Submission of list of testing agency and other parties providing services on the project.

2. Procedures and processing of field decisions, submittals, and substitutions, applications for payments, pricing request, Change Orders, and Contract closeout procedures.

3. Procedures for layout of the project, establishing controls, limits of right-of-way and easements.

4. Scheduling.

D. Owner's Representative shall record minutes and distribute copies to participants and those affected by decisions made.

1.6 SITE MOBILIZATION MEETING

A. Owner's Representative may schedule a meeting at the project site prior to construction start-up.

B. Attendance Required:
Owner's Representative/Engineer, Contractor's Superintendent, and major Subcontractors.

C. Agenda:

1. Use of the site by Owner and Contractor.

2. Owner's requirements. Features to remain.

3. Construction facilities provided by Contractor.

4. Temporary utilities provided by Contractor.

5. Security and housekeeping procedures.

6. Schedules.

7. Application for payment procedures.

8. Procedures for testing.

9. Procedures for maintaining record documents.

D. Contractor will record minutes and distribute copies to participants and those affected by decisions made.

1.7 PROGRESS MEETINGS

A. Schedule and administer meetings throughout the progress of the Work at weekly intervals or intervals agreed to by Owner's Representative and Contractor.

B. Contractor shall arrange bi-weekly meetings, prepare agenda with copies for participants, and preside at meetings.

C. Attendance Required:
Job superintendent, major Subcontractors suppliers, and Owner's Representative as appropriate to agenda topics for each meeting.

D. Agenda:

1. Review minutes of previous meetings.

2. Review of Work progress.

3. Field observations, problems, and decisions.

4. Identification of problems which impede planned progress.

5. Review of submittals schedule and status of submittals.

6. Review of off-site fabrication and delivery schedules.

7. Maintenance of progress schedule.

8. Corrective measures to regain projected schedule.

9. Planned progress during succeeding work period.

10. Coordination of projected progress.

11. Maintenance of quality and work standards.

12. Effect of proposed changes on progress schedule and coordination.

13. Other business relating to Work.

E. Contractor will record minutes and distribute copies to participants and those affected by decisions made.

PART 2 - PRODUCTS (NOT USED)

PART 3 - EXECUTION (NOT USED)

END OF SECTION

PART 1 - GENERAL

1.1 RELATED DOCUMENTS

A. Drawings and general provisions of Contract, including General and Supplementary Conditions and other Division- 1 Specification Sections, apply to this Section.

1.2 SUMMARY

A. This Section specifies administrative and procedural requirements for cutting and patching.

B. Refer to other Sections for specific requirements and limitations applicable to cutting and patching individual parts of the Work.

1. Requirements of this Section apply to mechanical and electrical installations. Refer to Division- 23 and Division- 26 Sections for other requirements and limitations applicable to cutting and patching mechanical and electrical installations.

2. Demolition of selected portions of the building for alterations is included in Section "Selective Demolition."

1.3 SUBMITTALS

A. Cutting and Patching Proposal:
Where approval of procedures for cutting and patching is required before proceeding, submit a proposal describing procedures well in advance of the time cutting and patching will be performed and request approval to proceed. Include the following information, as applicable, in the proposal:

1. Describe the extent of cutting and patching required and how it is to be performed indicate why it cannot be avoided.

2. Describe anticipated results in terms of changes to existing construction; include changes to structural elements and operating components as well as changes in the building's appearance and other significant visual elements.

3. List products to be used and firms or entities that will perform Work.

4. Indicate dates when cutting and patching is to be performed.

5. List utilities that will be disturbed or affected, including those that will be relocated and those that will be temporarily out-of-service. Indicate how long service will be disrupted.

6. Where cutting and patching involves addition of reinforcement to structural elements, submit details and engineering calculations to show how reinforcement is integrated with the original structure.

7. Approval by the Owner/Owner's Representative to proceed with cutting and patching does not waive the Owner/Owner's Representative's right to later require complete removal and replacement of a part of the Work found to be unsatisfactory.

1.4 QUALITY ASSURANCE

A. Requirements for Structural Work:

Do not cut and patch structural elements in a manner that would reduce their load-carrying capacity or load-deflection ratio.

1. Obtain approval of the cutting and patching pricing proposal before cutting and patching the following structural elements:

l. Foundation construction

m. Bearing and retaining walls

n. Structural concrete

o. Structural steel

p. Lintels

q. Timber and primary wood framing

r. Miscellaneous structural metals

s. Exterior curtain wall construction

B. Operational and Safety Limitations:

Do not cut and patch operating elements or safety related components in a manner that would result in reducing their capacity to perform as intended, or result in increased maintenance, or decreased operational life or safety.

1. Obtain approval of the cutting and patching pricing proposal before cutting and patching the following operating elements or safety related systems:

t. Shoring, bracing, and sheeting.

u. Water, moisture, or vapor barriers.

v. Membranes and flashings.

w. Electrical wiring systems.

C. Visual Requirements:

Do not cut and patch construction exposed on the exterior or in occupied spaces, in a manner that would, in the Owner's Representative's opinion, reduce the building's aesthetic qualities, or result in visual evidence of cutting and patching. Remove and replace Work cut and patched in a visually unsatisfactory manner.

PART 2 - PRODUCTS

2.1 MATERIALS

A. Use materials that are identical to existing materials. If identical materials are not available or cannot be used where exposed surfaces are involved, use materials that fully match existing adjacent surfaces possible with regard to visual effect. Use materials whose installed performance will equal or surpass that of existing materials.

PART 3 - EXECUTION

3.1 INSPECTION

A. Before cutting existing surfaces, examine surfaces to be cut and patched and conditions under which cutting and patching is to be performed. Take corrective action before proceeding, if unsafe or unsatisfactory conditions are encountered.

1. Before proceeding, meet at the site with parties involved in cutting and patching, including mechanical and electrical trades. Review areas of potential interference and conflict. Coordinate procedures and resolve potential conflicts before proceeding.

3.2 PREPARATION

A. Temporary Support:
Provide temporary support of Work to be cut.

B. Protection:
Protect existing construction during cutting and patching to prevent damage. Provide protection from adverse weather conditions for portions of the Project that might be exposed during cutting and patching operations.

C. Avoid interference with use of adjoining areas or interruption of free passage to adjoining areas.

D. Take all precautions necessary to avoid cutting existing pipe, conduit or ductwork serving the building, but scheduled to be removed or relocated until provisions have been made to bypass them.

3.3 PERFORMANCE

A. General:
Employ skilled workmen to perform cutting and patching. Proceed with cutting and patching at the earliest feasible time and complete without delay.

1. Cut existing construction to provide for installation of other components or performance of other construction activities and the subsequent fitting and patching required to restore surfaces to their original condition.

B. Cutting:

Cut existing construction using methods least likely to damage elements to be retained or adjoining construction. Where possible review proposed procedures with the original installer; comply with the original installer's recommendations.

1. In general, where cutting is required use hand or small power tools designed for sawing or grinding, not hammering and chopping. Cut holes and slots neatly to size required with minimum disturbance of adjacent surfaces. Temporarily cover openings when not in use.

2. To avoid marring existing finished surfaces, cut or drill from the exposed or finished side into concealed surfaces.

3. Cut through concrete and masonry using a cutting machine such as a carborundum saw or diamond core drill.

4. Comply with requirements of applicable Sections of Division-2 where cutting and patching requires excavating and backfilling.

5. By-pass utility services such as pipe or conduit, before cutting, where services are shown or required to be removed, relocated or abandoned. Cut-off pipe or conduit in walls or partitions to be removed. Cap, valve or plug and seal the remaining portion of pipe or conduit to prevent entrance of moisture or other foreign matter after by-passing and cutting.

C. Patching:

Patch with durable seams that are as invisible as possible. Comply with specified tolerances.

1. Where feasible, inspect and test patched areas to demonstrate integrity of the installation.

2. Restore exposed finishes of patched areas and extend finish restoration into retained adjoining construction in a manner that will eliminate evidence of patching and refinishing.

3.4 CLEANING

A. Thoroughly clean areas and spaces where cutting and patching is performed or used as access. Remove completely paint, mortar, oils, putty and items of similar nature. Thoroughly clean piping, conduit and similar features before painting or other finishing is applied. Restore damaged pipe covering to its original condition.

END OF SECTION

PART 1 - GENERAL

1.1 RELATED DOCUMENTS

A. Drawings and general provisions of the Contract, including General and Supplementary Conditions and other Division I Specification Sections, apply to this Section.

1.2 DEFINITIONS

A. General:
Basic Contract definitions are included in the Conditions of the Contract.

B. Indicated:
The term indicated refers to graphic representations, notes, or schedules on Drawings, or other Paragraphs of Schedules in the Specifications, and similar requirements in the Contract Documents. Terms such as shown, noted, scheduled, and specified are used to help the reader locate the reference. There is no limitation on location.

C. Directed:
Terms such as directed, requested, authorized, selected, approved, required and permitted mean directed by the Owner's Representative, requested by the Owner's Representative, and similar phrases.

D. Approved:
The term approved, when used in conjunction with the Owner's Representative's action on the Contractor's submittals, applications, and requests, is limited to the Owner's Representative's duties and responsibilities as stated in the Conditions of the Contract.

E. Regulations:
The term regulations includes laws, ordinances, statutes, and lawful orders issued by authorities having jurisdiction, as well as rules, conventions, and agreements within the construction industry that control performance of the Work.

F. Furnish:
The term furnish means supply and deliver to the Project site, ready for unloading, unpacking, assembly, installation, and similar operations.

G. Install:
The term describes operations at the Project site including the actual unloading, unpacking, assembly, erection, placing, anchoring, applying, working to dimension, and finishing, curing, protecting, cleaning, and similar operations.

H. Provide:
The term provide means to furnish and install, complete and ready for the intended use.

I. Installer:
An installer is the Contractor or another entity engaged by the Contractor, either as an employee, subcontractor, or contractor of lower tier, to perform a particular construction activity, including installation, erection, application, and similar operations. Installers are required to be experienced in the operations they are engaged to perform.

J. Trades:
Using terms such as carpentry is not intended to imply that certain construction activities must be performed by accredited or unionized individuals of a corresponding generic name, such as carpenter. It also does not imply that requirements specified apply exclusively to tradespersons of the corresponding generic name.

K. Project site:
The space available to the Contractor for performing construction activities either exclusively or in conjunction with others performing other work as part of the Project. The extent of the Project site is shown on the Drawings and may or may not be identical with the description of the land on which the Project is to be built.

L. Testing Agencies:
A testing agency is an independent entity engaged to perform specific inspections or tests, either at the Project site or elsewhere, or to reports on and, if required, to interpret results of those inspections or tests.

M. Owner's Representative:
Agent authorized to act on behalf of the Owner.

1.3 SPECIFICATION FORMAT AND CONTENT EXPLANATION

A. Specification Format:
These Specifications are organized into Divisions and Sections based on the Construction Specification Institute's 50 - Division Format and MASTER FORMAT numbering system.

B. Specification Content:
This Specification uses certain conventions regarding the style of language and the intended meaning of certain terms, words, and phrases when used in particular situations or circumstances. These conventions are explained as follows:

1. Abbreviated Language:
Language used in Specifications and other Contract Documents is abbreviated. Words and meanings shall be interpreted as appropriate. Words that are implied, but not stated, shall be interpolated as the sense requires. Singular words will be interpreted as plural and plural words interpreted as singular where applicable as the context of the Contract Documents indicate.

2. Imperative and streamlined language is used generally in the Specifications. Requirements expressed in the imperative mood are to be performed by the Contractor. At certain locations in the Text, subject language is used for clarity to describe responsibilities that must be fulfilled indirectly by the Contractor, or by other means when so noted.

x. The words "shall be" are implied wherever a colon (:) is used within a sentence or phrase.

1.4 INDUSTRY STANDARDS

A. Applicability of Standards:

Except where the Contract Documents include more stringent requirements, applicable construction industry standards have the same force and effect as if bound or copied directly into the Contract Documents to the extent referenced. Such standards are made a part of the Contract Documents by reference.

B. Publication Dates:
Comply with the standards in effect as of the date of the Contract Documents.

C. Conflicting Requirements:
Where compliance with two or more standard is specified and where the standards may establish different or conflicting requirements for minimum quantities or quality levels, refer requirements that are different but apparently equal and other uncertainties to the Owner's Representative for a decision before proceeding.

1. Minimum Quantity or Quality Levels:
The quantity or quality level shown or specified shall be the minimum provided or performed. The actual installation may comply exactly with the minimum quantity or quality specified, or it may exceed the minimum within reasonable limits. To comply with these requirements, indicated numeric values are minimum or maximum, as appropriate, for the context of the requirements. Refer uncertainties to the Owner's Representative for a decision before proceeding.

D. Copies of Standards:
Each entity engaged in construction on the project is required to be familiar with industry standards applicable to its construction activity. Copies of applicable standards are not bound with the Contract Documents.

1. Where copies of standards are needed to perform a required construction activity, the Contractor shall obtain copies directly from the publication source.

E. Abbreviations and Names:
Trade association names and titles of general standards are frequently abbreviated. Where such acronyms or abbreviations are used in the Specifications or other Contract Documents, they mean the recognized name of the trade association, standards-generating organization, authority having jurisdiction, or other entity applicable to the context of the Text provision. Refer to the "Encyclopedia of Associations," published by Gale Research Co., available in most libraries.

1.5 SUBMITTALS

A. Permits, Licenses, and Certificates:
For the Owner's records, submit copies of permits, licenses, certifications, inspection reports, releases, jurisdictional settlements, notices, receipts for fee payments, judgments, and similar documents, correspondence, and records established in conjunction with compliance with standards and regulations bearing upon performance of the Work.

PART 2 - PRODUCTS (NOT APPLICABLE)

PART 3 - EXECUTION (NOT APPLICABLE)

END OF SECTION

PART 1 - GENERAL

1.1 SECTION INCLUDES

A. Procedures for preparation and submittal of applications for progress payments.

B. Documentation of changes in Contract Sum and Contract Time.

C. Change procedures.

D. Procedures for preparation and submittal of application for final payment.

1.2 RELATED SECTIONS: N/A

1.3 SCHEDULE OF VALUES

A. Submit a printed schedule on AIA Form G703 -Application and Certificate for Payment Continuation Sheet.

B. Submit Schedule of Values in duplicate within 15 days after date of Owner-Contractor Agreement.

C. Format:
Utilize the Table of Contents of this Project Manual. Identify each line item with number and title of the specification Section. Identify site mobilization, bonds, and insurance, and site demobilization.

D. Revise schedule to list approved Change Orders, with each Application for Payment.

1.4 APPLICATIONS FOR PROGRESS PAYMENT

A. Payment Period:
Submit at intervals stipulated in the Agreement.

B. Present required information as typewritten/computer-generated form.

C. Form:
AIA G702 Application and Certificate for Payment and AIA G703 -Continuation Sheet including continuation sheets when required.

D. For each item, provide a column for listing each of the following:

1. Item Number
2. Description of Work
3. Scheduled Values
4. Previous Applications
5. Work in Place and Stored Materials under this Application

6. Total Completed and Stored to Date of Application

7. Percentage of Completion

8. Balance to Finish

9. Retainage

E. Execute certification by signature of authorized officer.

F. Use data from approved Schedule of Values. Provide dollar value in each column for each line item for portion of work performed and for stored Products.

G. List each authorized Change Order as a separate line item, listing Change Order number and dollar amount as for an original time of Work.

H. Submit two copies of each Application for Payment.

I. Include the following with the application:

1. Transmittal Letter as specified for Submittals in Section 01300.

2. Construction progress schedule revised and current as specified in Section 01300.

3. Current construction photographs specified in Section 01300.

4. Partial release of liens from major Subcontractors and Vendors.

5. Affidavits attesting to off-site stored products.

J. When Owner's Representative requires substantiating information, submit data justifying dollar amounts in question. Provide one copy of date with cover letter for each copy of submittal. Show application number and date, and line item by number and description.

1.5 MODIFICATION PROCEDURES

A. Owner's Representative will advise of minor changes in the Work not involving an adjustment to Contract Sum or Contract Time as authorized by the Conditions of the Contract by issuing supplemental instructions on AIA Form G710.

B. Construction Change Directive:
Owner's Representative may issue a document, signed by Owner, instructing Construction Manager to proceed with a change in the Work, for subsequent inclusion in a Change Order.

1. The document will describe changes in the Work and will designate method of determining any change in Contract Sum or Contract Time.

2. Promptly execute the change in Work.

C. Pricing Request:

Owner's Representative may issue a document which includes a detailed description of a proposed change with supplementary or revised Drawings and specifications, a change in Contract Time for executing the change with a stipulation of any overtime work required and the period of time during which the requested price will be considered valid. Construction Manager shall prepare and submit a fixed price quotation within 15 days.

D. Computation of Change in Contract Amount:

1. For change requested by Owner's Representative for work falling under a fixed price contract, the amount will be based on Construction Manager's price quotation.

2. For change requested by Construction Manager, the amount will be based on the Construction Manager's request for a Change Order as approved by Owner.

3. For pre-determined unit prices and quantities, the amount will be based on the fixed unit prices.

4. For change ordered by Owner's Representative without a quotation from the Construction Manager, the amount will be determined by Owner's Representative based on the Construction Manager's substantiation of costs as specified for Time and Material Work.

E. Substantiation of Costs:
Provide full information required for evaluation.

1. Provide the following data:

y. Quantities of products, labor, and equipment

z. Taxes, insurance, and bonds

aa. Overhead and profit

bb. Justification for any change in Contract Time

cc. Credit for deletions from Contract, similarly documented

2. Support each claim for additional costs with additional information:

dd. Origin and date of claim

ee. Dates and times work was performed, and by whom

ff. Time records and wage rates paid

gg. Invoices and receipts for products, equipment, and subcontracts, similarly documented

3. For Time and Material Work, submit itemized account and supporting data after completion of change, within time limits indicated in the Conditions of the Contract.

F. Execution of Change Orders:
   Owner's Representatives will issue Change Orders for signatures of parties as provided in the Conditions of the Contract on AIA G701.

G. After execution of Change Order, promptly revise Schedules of Values and Application for Payment forms to record each authorized Change Order as a separate line item and adjust the Contract Sum.

H. Promptly revise Progress Schedules to reflect any change in Contract Time, revise sub-schedules to adjust times for other items of work affected by the change, and resubmit.

1.6 APPLICATION FOR FINAL PAYMENT

A. Prepare Application for Final Payment as specified for progress payments, identifying total adjusted Contract Sum, previous payments, and sum remaining due.

B. Application for Final Payment will not be considered until the following have been accomplished:

   4. All closeout procedures specified in Section 01700

PART 2 - PRODUCTS- NOT USED

PART 3 - EXECUTION- NOT USED

END OF SECTION

PART 1 - GENERAL

1.1 SECTION INCLUDES

A. Project coordination

B. Preconstruction meeting

C. Progress meetings

D. Progress photographs

1.2 RELATED SECTIONS

A. Section 01700-Execution Requirements:
Additional coordination requirements.

B. Section 01780-Closeout Submittals:
Project record documents.

1.3 PROJECT COORDINATION

A. Contractor:
The Contractor shall be responsible for overall project coordination between subcontractors and trade contractors.

B. Cooperate with the Contractor in allocation of mobilization areas of site; for field offices and storage, for personnel access, traffic, and parking facilities.

C. During construction, coordinate use of site and facilities through the Contractor.

D. Comply with Contractor procedures for intra-project communications; submittals, reports and records, schedules, coordination drawings, and recommendations; and resolution of ambiguities and conflicts. Particular attention should be given to the Contractor's subcontractor safety policy.

E. Comply with instructions of the Contractor for use of temporary utilities and construction facilities.

F. Coordinate field engineering and layout work under instructions of the Contractor.

G. The Contractor to make the following types of submittals to Owner's Representative:

1. Requests for Interpretation

2. Requests for Substitution

3. Shop Drawings, Product Data, and Samples

4. Test and Inspection Reports

5. Manufacturer's Instructions and Field Reports

6. Applications for Payment and Change Order requests

7. Progress Schedules

8. Coordination of Drawings

9. Closeout Submittals

PART 2 - PRODUCTS (NOT USED)

PART 3 – EXECUTION

3.1 PRECONSTRUCTION MEETING

A. Contractor will schedule a meeting after Notice of Award and prior to mobilization.

B. Attendance Required:

1. Owner:
   Owner's Representative and invited Consultants

2. Contractor:
   Project Manager and Job Superintendent

3. Major Sub-contractors as requested by the Owner and Contractor.

C. Minimum Agenda:

1. Execution of Owner-Contractor Agreement.

2. Submission of executed bonds and insurance certificates.

3. Submission of progress schedule.

4. Procedures and processing of field decisions, submittals and substitutions, applications for payments, pricing requests, Change Orders, and Contract closeout procedures.

5. Use of premises by Owner and Contractor.

6. Construction facilities and controls provided by Owner.

7. Temporary utilities provided by Owner.

8. Survey and construction layout.

9. Security and housekeeping procedures.

10. Schedules.

11. Application for payment procedures.

12. Procedures for testing.

13. Procedures for maintaining record documents.

14. Scheduling.

15. Scheduling activities of Material Testing.

D. Contractor shall record minutes and distribute copies within five days after meeting to participants, with one copy to Owner's Representative, Owner, participants, and those affected by decisions made.

3.2 PROGRESS MEETINGS

A. Contractor shall schedule and administer meetings throughout the progress of the Work at maximum bi-monthly intervals. A representative from each major trade contractor shall be required to attend these meetings, as requested by the Owner's Representative.

B. The Contractor shall make arrangements for meetings, prepare agenda with copies for participants, and preside at meetings.

C. Attendance Required:

1. Contractor, Project Manager and Job Superintendent.

2. Owner's Representative.

3. Engineer/Architect.

4. Major Sub-contractors as appropriate to agenda topics for each meeting.

D. Minimum Agenda:

1. Review minutes of previous meetings.

2. Review of Work progress.

3. Field observations, problems, and decisions.

4. Identification of problems which impede planned progress.

5. Review of submittals schedule and status of submittals.

6. Maintenance of progress schedule.

7. Corrective measures to regain projected schedules.

8. Planned progress during succeeding work period.

9. Maintenance of quality and work standards.

10. Effect of proposed changes on progress schedule and coordination.

11. Other business relating to Work.

E. Contractor shall record minutes and distribute copies within five days after meeting to participants, with one copy to Owner's Representative, Owner, participants, and those affected by decisions made.

3.3 PROGRESS PHOTOGRAPHS

A. Provide photographs of site and construction throughout progress of Work produced by an experienced photographer, acceptable to Owner's Representative.

B. Take photographs on date for each application for a payment and as follows:

1. Completed demolition and Site clearing.

2. Excavations.

3. Foundations.

4. Utility Installation – depth, alignment, stub-outs

5. Final completion.

C. Views:

1. Provide non-aerial photographs from three cardinal views at each specified time, until Date of Substantial Completion.

2. Consult with Owner's Representative for instructions on views required.

3. Provide factual presentation.

4. Provide correct exposure and focus, high resolution and sharpness, maximum depth of field, and minimum distortion.

D. Each Photo: Full color, jpeg format

1. Provide 3 sets on separate USB sticks
   Size: 5 MB file

2. Identify each photo on file name. Identify name of Project, contract number, phase, date and orientation of view.

E. Deliver USB sticks with Application for Payment and transmittal letter specified in this Section.

END OF SECTION

PART 1 – GENERAL

1.1 SECTION INCLUDES

A. Preliminary schedule.

B. Construction progress schedule, bar chart type.

1.2 RELATED SECTIONS (NOT APPLICABLE)

1.3 SUBMITTALS

A. Within 10 days after date established in Notice To Proceed, submit preliminary schedule defining planned operations for the first 30 days of Work, with a general outline for remainder of Work, in Microsoft Project format on a USB stick.

B. If preliminary schedule requires revision after review, submit by email in the Microsoft Project format a revised schedule within 10 days.

C. Within 30 days after review of preliminary schedule, submit draft of proposed complete schedule by email in the Microsoft Project format for review.

D. Within 10 days after joint review, submit complete schedule by email in the Microsoft Project format.

E. Submit updated paper schedule with each Application for Payment.

F. Submit the number of opaque reproductions that the Contractor requires, plus four copies which will be retained by the Owner's Representative.

G. Submit under transmittal letter form specified in Section 01300.

1.4 QUALITY ASSURANCE

A. Scheduler:
Contractor's personnel specialist Consultant specializing in CPM scheduling with two years minimum experience in scheduling construction work of a complexities comparable to this Project, and having use of computer facilities capable of delivering by email a detailed graphic schedule in Microsoft Project format within 48 hours of request.

1.5 SCHEDULE FORMAT

A. Listings:
In chronological order according to the start date for each activity. Identify each activity with the applicable Specification Section number.

B. Hard Copy Sheet Size: Multiples of 8-l/2 x 11 inches.

C. Scale and Spacing: To allow for notations and revisions.

D. Software Format: Microsoft Project

PART 2 - PRODUCTS (NOT USED)

PART 3 - EXECUTION

3.1 PRELIMINARY SCHEDULE

A. Prepare preliminary schedule in the form of a horizontal bar chart.

3.2 CONTENT

A. Show complete sequence of construction by activity, with dates for beginning and completion of each element of construction.

B. Identify each item by Specification Section number.

C. Identify Work of separate stages and other logically grouped activities.

D. Provide separate schedule of submittal dates for shop drawings, product data, and dates reviewed submittals will be required from the Owner's Representative. Indicate decision dates for selection of finishes.

E. Provide legend for symbols and abbreviations used.

3.3 BAR CHARTS

A. Include a separate bar for each major portion of Work or operation.

3.4 REVIEW AND EVALUATION OF SCHEDULE

A. Participate in joint review and evaluation of schedule with Owner's Representative at each submittal.

B. Evaluate project status to determine work behind schedule and work ahead of schedule.

C. After review, revise as necessary as result of review, and resubmit within 10 days.

3.5 UPDATING SCHEDULE

A. Maintain schedules to record actual start and finish dates of completed activities.

B. Indicate progress of each activity to date of revision, with projected completion date of each activity.

C. Annotate diagrams to graphically depict current status of Work.

D. Identify activities modified since previous submittal, major changes in Work, and other identifiable changes.

E. Indicate changes required to maintain Date of Substantial Completion.

3.6 DISTRIBUTION OF SCHEDULE

A. Distribute copies of updated schedules to Contractor's project site file, to Subcontractors, Suppliers, Engineer/Architect, Owner's Representative, and other concerned parties.

B. Instruct recipients to promptly report, in writing, problems anticipated by projections shown in schedules.

END OF SECTION

PART 1 - GENERAL

1.1 SECTION INCLUDES

A. Quality assurance- control of installation

B. Tolerances

C. References and standards

D. Mock-up

E. Inspecting and testing laboratory services

F. Manufacturers' field services

1.2 RELATED SECTIONS

A. Section 01000 General Specifications:
Contractor's Shop and Working Drawings.

1.3 QUALITY ASSURANCE - CONTROL OF INSTALLATION

A. Monitor quality control over suppliers, manufacturers, Products, services, site conditions, and workmanship, to produce Work of specified quality.

B. Comply with manufacturers' instructions, including each step in sequence.

C. Should manufacturers' instructions conflict with Contract Documents, request clarification from Owner's Representative/Engineer before proceeding.

D. Comply with specified standards as minimum quality for the Work except where more stringent tolerances, codes, or specified requirements indicate higher standards or more precise workmanship.

E. Perform Work by persons qualified to produce required and specified quality.

F. Verify that field measurements are as indicated on shop drawings or as instructed by the manufacturer.

G. Secure Products in place with positive anchorage devices designed and sized to withstand stresses, vibration physical distortion, or disfigurement.

1.4 TOLERANCES

A. Monitor fabrication and installation tolerance control of Products to produce acceptable Work. Do not permit tolerances to accumulate.

B. Comply with manufacturers' tolerances conflict with Contract Documents, request clarification from Owner's Representative/Engineer before proceeding.

C. Adjust Products to appropriate dimensions; position before securing Products in place.

1.5 REFERENCES AND STANDARDS

A. For Products or workmanship specified by association, trade, or other consensus standards, complies with requirements of the standard, except when more rigid requirements are specified or are required by applicable codes.

B. Conform to reference standard by date of issue current on date of Contract Documents, except where a specific date is established by code.

C. Obtain copies of standards where required by product Specification Sections.

D. Neither the contractual relationships, duties, nor responsibilities of the parties in Contract, nor those of the Owner's Representative/Engineer shall be altered from the Contract Documents by mention or inference otherwise in any reference document.

1.6 MOCK UP (NOT USED)

1.7 INSPECTION AND TESTING LABORATORY SERVICES

A. Owner may appoint, employ, and pay for specified services of an independent firm to perform construction testing services.

B. The independent firm will perform testing and other services specified in individual sections and as required by the Owner.

C. Testing reports will be submitted by the independent firm to the Owner indicating services and indicating compliance or non-compliance with the Contract Documents.

D. Cooperate with independent firm; furnish safe access and assistance by incidental labor as requested.

1. Notify Owner's Representative and/or independent firm 48 hours prior to expected time for operations requiring services. These operations include, but are not necessarily limited to:

   hh. Cast-in-place concrete placement.

   ii. Bituminous pavement construction.

1.8 INSPECTION SERVICES

A. Owner may appoint, employ, and pay for specified services of an independent firm to perform observation.

B. The independent firm will perform observations and other services specified in individual Specification Sections and as required by the Owner.

C. Reports will be submitted by the independent firm to the Owner, in duplicate, indicating observations and indicating compliance or non-compliance with Contract Documents.

D. Cooperate with independent firm; furnish safe access and assistance by incidental labor as requested.

1. Notify Owner's Representative and /or independent firm 48 hours prior to expected time for operations requiring services.

E. Observations do not relieve Contractor to perform Work to the contract requirements.

1.9 MANUFACTURERS' FIELD SERVICES

A. When specified in individual Specification Sections, require material or Product suppliers or manufacturers to provide qualified staff personnel to observe site conditions, conditions of surfaces and installation, quality of workmanship, as applicable, and to initiate instructions when necessary.

B. Submit qualifications of observer to Owner 30 days in advance of required observations. Observer subject to approval of Owner.

C. Report observations and site decisions or instructions given to applicators or installers that are supplemental or contrary to manufacturers' written instructions.

PART 2 - PRODUCTS (NOT USED)

PART 3 - EXECUTION

3.1 EXAMINATION

A. Verify that existing site conditions and substrate surfaces are acceptable for subsequent Work. Beginning new Work means acceptance of existing conditions.

B. Verify that existing substrate is capable of structural support or attachment of new Work being applied or attached.

C. Examine and verify specific conditions described in individual Specification Sections.

D. Verify that utility services are available, of the correct characteristics, and in the correct locations.

3.2 PREPARATION

A. Clean substrate surfaces prior to applying next material or substance.

B. Seal cracks or openings of substrate prior to applying next material or substance.

C. Apply manufacturer required or recommended substrate primer, sealer, or conditioner prior to applying any new material or substance in contact or bond.

END OF SECTION

PART 1 - GENERAL

1.1 REQUIREMENTS INCLUDED

A. Products

B. Transportation and Handling

C. Storage and Protection

D. Product Options

E. Products List

F. Substitutions

1.2 RELATED REQUIREMENTS

A. Section 01400- Quality Control:
Submittal of manufacturer's data

B. Section 01700- Contract Closeout:
Operation and maintenance data

PART 2 - PRODUCTS

2.1 GENERAL

A. Products include the material, equipment, and systems used on this Project.

B. Comply with the Specifications and referenced standards as minimum requirements.

C. Components required to be supplied in quantity within a Specification Section shall be the same, and shall be interchangeable.

2.2 TRANSPORTATION AND HANDLING

A. Transport products by methods that will avoid product damage and deliver them in undamaged condition in the manufacturer's unopened containers or packaging.

B. Provide equipment and personnel to handle unloading and storage of the products by methods to prevent soiling or damage.

C. Promptly inspect the shipments to assure that the products comply with requirements, the quantities are correct, and the products are undamaged.

2.3 STORAGE AND PROTECTION

A. Store products in accordance with the manufacturer's instructions, with intact and legible seals and labels.

B. For exterior storage of fabricated products, place on sloped supports above ground. Cover the products subject to deterioration with an impervious sheet covering; provide ventilation to avoid condensation.

C. Store loose granular materials on solid surfaces in a well-drained area. Prevent mixing of the materials with foreign matter.

D. Arrange storage to provide access for inspection. Periodically inspect to assure that products are undamaged, and are maintained under required conditions.

2.4 PRODUCT OPTIONS

A. Products specified by Reference Standards or by Description Only: Furnish any product meeting those standards.

B. Products specified by Naming One or More Manufacturers with a Provision for Substitutions: Submit a request for substitution for any manufacturer not specifically named.

C. Products specified by Naming Several Manufacturers.

D. Products of named manufacturers meeting Specifications: No options, no substitutions will be allowed.

2.5 PRODUCTS LIST

A. Within 15 days after the date of Owner-Contractor Agreement, submit a complete list of major proposed for use, with name of the manufacturer, trade name, and model number of each product.

2.6 SUBSTITUTIONS

A. Only within 15 days after date of the Agreement will the Owner's Representative/Engineer consider requests from the Contractor for substitutions. Subsequently, substitutions will be considered only when a product becomes unavailable due to no fault of the Contractor.

B. Document each request with complete data substantiating the compliance of the proposed substitution with the Contractor Documents.

C. The request constitutes a representation that the Contractor:

1. Has investigated proposed product and determined that it meets or exceeds, in all respects, the specified product.

2. Will provide the same warranty for substitution as for the specified product.

3. Will coordinate installation and make other changes which may be required for the Work to be complete in all respects.

4. Waives claims for additional cost which may subsequently become apparent.

5. Substitutions will not be considered when they are indicated or implied on shop drawing or product data submittals without separate written request, or when acceptance will require substantial revision of the Contract Documents.

D. Substitutions will not be considered when they are indicated or implied on shop drawings or product data submittals without separate written request, or when acceptance will require substantial revision of the Contract Documents.

E. The Owner's Representative/Engineer will determine acceptability of the proposed substitution, and will notify the Contractor of acceptance or rejection in writing within a reasonable time.

F. Only one request for the substitution will be considered for each product. When substitution is not accepted, provide the specified product.

2.7 SYSTEM DEMONSTRATION

A. Prior to the final inspection, demonstrate operation of the entire system to the Owner.

PART 3 - EXECUTION (NOT USED)

END OF SECTION

PART 1 - GENERAL

A. The Contractor shall provide transportation of all equipment, materials and products furnished under these Contract Documents to the site of the Work. In addition, the Contractor shall provide preparation for shipment and storage, unloading, handling and re-handling, short-term storage, extended storage, storage facilities, maintenance and protection during storage, preparation for installation, and all other work and incidental items necessary or convenient to the Contractor for the satisfactory prosecution and completion of the Work.

PART 2 - TRANSPORTATION

A. All equipment shall be suitably boxed, crafted, or otherwise protected during transportation.

PART 3 - HANDLING

A. All materials, and products shall be carefully handled to prevent damage or excessive deflections during unloading or transportation. All equipment, materials, and products damaged during transportation or handling shall be repaired or replaced by the Contractor at no additional cost to the Authority prior to being incorporated into the Work.

B. Lifting and handling drawings and instructions furnished by the manufacturer or supplier shall be strictly followed. Spreader bars or lifting beams shall be used when the distances between lifting points exceeds that permitted by standard industry practice. Slings and chains shall be padded as required to prevent damage to protective coatings and finishes.

C. Under no circumstances shall equipment or products such as pipe, structural steel, castings, reinforcement, lumber, piles, poles, etc., be thrown or rolled off of trucks onto the ground. Tossing of pipes and pipe fittings and accessories is an unacceptable practice. Items tossed shall be inspected by the Owner's Representative/Engineer and/or Architect. If the Owner's Representative determines that the product has been comprised, Contractor shall replace product at no additional cost to Owner.

D. Items such as non-metallic pipe, non-metallic conduit, flagpoles, and lighting poles shall be handled using non-metallic slings or straps. Under no circumstance shall chains or steel cables be used to transport or handle non-metallic products.

END OF SECTION

PART 1 - GENERAL

A. Equipment shall be received, inspected, unloaded, handled, stored, maintained, and protected by the Contractor in a suitable location on or off site, if necessary, until such time as installation is required.

B. Storage and protection of Contractor-furnished equipment shall be strict conformance with the requirements of the Section entitled "General Equipment Stipulations" of these Specifications.

PART 2 - STORAGE

A. The Contractor shall be responsible for providing satisfactory storage facilities that are acceptable to the Owner's Representative/Engineer. In the event that satisfactory facilities cannot be provided on site, satisfactory warehouse, acceptable to the Owner's Representative/Engineer, will be provided by the Contractor for such time until the materials and products can be accommodated at the site.

B. Materials, and products that are stored in a satisfactory warehouse acceptable to the Owner's Representative/Engineer will be eligible for progress payments as though they had been delivered to the job site.

C. The Contractor shall be responsible for the maintenance and protection of all equipment, materials, and products placed in storage and shall bear all costs of storage, preparation for transportation, transportation, re-handling, and preparation for installation.

D. Equipment and products stored outdoors shall be supported above the ground on suitable wooden blocks or braces arranged to prevent excessive deflection or bending between supports. Items such as pipe, structural steel, and sheet construction products shall be stored with one end elevated to facilitate drainage.

E. Unless otherwise permitted in writing by the Owner's Representative/Engineer, building products such as rough lumber, plywood, concrete block, and structural tile may be stored outdoors under a properly secured waterproof covering.

F. Tarpaulins and other coverings shall be supported above the stored equipment or materials on wooden strips to provide ventilation under the cover and minimize condensation. Tarpaulins and covers shall be arranged to prevent ponding of water.

G. PVC pipe, if stored outside, shall be suitably protected from sunlight (UV) by covering with a tarp or exterior paint. Such covering shall be completed and continual.

PART 3 - EXTENDED STORAGE (NOT USED)

END OF SECTION

PART 1 - GENERAL

1.1 RELATED DOCUMENTS

A. Drawings and general provisions of Contract, including General and Supplementary Conditions and other Division - 1 Specification Sections, apply to this Section.

1.2 SUMMARY

A. This Section specifies administrative and procedural requirements for project closeout, including but not limited to:

1. Inspection procedures.

2. Project record document submittal

3. Operating and maintenance manual submittal.

4. Submittal of warranties.

5. Final cleaning.

B. Closeout requirements for specific construction activities are included in the appropriate Sections in Divisions 2 through 16, including all Mechanical, Electrical and Plumbing Specifications.

1.3 SUBSTANTIAL COMPLETION

A. Preliminary Procedures:
Before requesting inspection for certification of Substantial Completion, complete the following. List exceptions in the request.

1. In the Application for Payment that coincides with, or first follows, the date Substantial Completion is claimed, show 100 percent completion for the portion of the Work claimed as substantially complete. Include supporting documentation for completion as indicated in these Contract Documents and a statement showing an accounting of changes to the Contract Sum.

   jj. If 100 percent completion cannot be shown, include a list of incomplete items, the value of incomplete construction, and reasons the Work is not complete.

2. Advise Owner of pending insurance change-over requirements.

3. Submit specific warranties, workmanship bonds, maintenance agreements, final certifications and similar documents.

4. Obtain and submit releases enabling the Owner unrestricted use of the Work and access to services and utilities; include permits and similar releases.

5. Deliver tools, extra stock, and similar items.

B. Inspection Procedures:

On receipt of a request for inspection, the Owner will either proceed with inspection or advise the Contractor of unfilled requirements. The Owner will prepare the Certificate of Substantial Completion following inspection, or advise the Contractor of construction that must be completed or corrected before the certificate will be issued.

6. The Owner will repeat inspection when requested and assured that the Work has been substantially completed.

7. Results of the completed inspection will form the basis of requirements for final acceptance.

1.4 FINAL ACCEPTANCE

A. Preliminary Procedures:

Before requesting final inspection for certification of final acceptance and final payment, complete the following. List exceptions in the request.

1. Submit the final payment request with releases and supporting documentation not previously submitted and accepted. Include certificates of insurance for products and completed operations where required.

2. Submit an updated final statement, accounting for final additional changes to the Contract Sum.

3. Submit a certified copy of the Owner's final inspection list of items to be completed or corrected, stating that each item has been completed or otherwise resolved for acceptance, and the list has been endorsed and dated by the Owner’s Representative.

4. Submit consent of surety to final payment.

5. Submit a final liquidated damages settlement statement.

6. Submit evidence of final, continuing insurance coverage complying with insurance requirements.

B. Re-inspection Procedure:

The Owner will re-inspect the Work upon receipt of notice that the Work, including inspection list items from earlier inspections, has been completed, except items whose completion has been delayed because of circumstances acceptable to the Owner’s Representative.

1. Upon completion of re-inspection, the Owner’s Representative will prepare a certificate of final acceptance or notify the Contractor of Work that is incomplete or of obligations that have not been fulfilled but are required for final acceptance.

2. If necessary, re-inspection will be repeated.

1.5 RECORD DOCUMENT SUBMITTALS

A. General:

Do not use record documents for construction purposes; protect from deterioration and loss in a secure, fire-resistive location; provide access to record documents for the Owner's reference during normal working hours.

B. Record Drawings:

Maintain a clean, undamaged set of blue or black line white prints of Contract Drawings and Shop Drawings. Mark the set to show the actual installation where the installation varies substantially from the Work as originally shown. Mark whichever drawing is most capable of showing conditions fully and accurately; where Shop Drawings are used, record a cross-reference at the corresponding location on the Contract Drawings. Give attention to concealed elements that would be difficult to measure and record at a later date.

1. Mark record sets with red erasable pencil; use other colors to distinguish between variations in separate categories of the Work.

2. Mark new information that is important to the Owner, but was not shown on Contract Drawings or Shop Drawings.

3. Note related Change Order numbers where applicable.

4. Organize record drawing sheets into manageable sets, bind with durable paper cover sheets, and print suitable titles, dates and other identification on the cover of each set.

C. Record Specifications:

Maintain one complete copy of the Project Manual, including addenda, and one copy of other written construction documents such as Change Orders and modifications issued in printed form during construction. Mark these documents to show substantial variations in actual Work performed in comparison with the text of the Specifications and modifications. Give particular attention to substitutions, selection of options and similar information on elements that are concealed or cannot otherwise be readily discerned later by direct observation. Note related record drawing information and Product Data.

1. Upon completion of the Work, submit record Specifications to the Owner’s Representative for the Owner's records.

D. Record Product Data:

Maintain one copy of each Product Data submittal. Mark these documents to show significant variations in actual Work performed in comparison with information submitted. Include variations in products delivered to the site, and from the manufacturer's installation instructions and recommendations. Give attention to concealed products and portions of the Work which cannot otherwise be readily discerned later by direct observation. Note related Change Orders and mark-up of record drawings and Specifications.

2. Upon completion of mark-up, submit complete set of record Product Data to the Owner’s Representative for the Owner's records.

E. Record Sample Submitted:

Immediately prior to the date or dates of Substantial Completion, the Contractor will meet at the site with the Owner's Representative and the Owner's personnel to determine which of the submitted Samples that have been maintained during progress of the Work are to be transmitted to the Owner for record purposes. Comply with delivery to the Owner's Sample storage area.

F. Miscellaneous Record Submittals:
Refer to other Specification Sections for requirements of miscellaneous record-keeping and submittals in connection with actual performance of the Work. Immediately prior to the date or dates of Substantial Completion, complete miscellaneous records and place in good order, properly identified and bound or filed, ready for continued use and reference. Submit to the Owner's Representative for the Owner's records.

PART 2 - PRODUCTS (NOT USED)

PART 3 - EXECUTION

3.1 CLOSEOUT PROCEDURES

A. Operating and Maintenance Instructions: Arrange for each installer of equipment that requires regular maintenance to meet with the Owner's personnel to provide instruction in proper operation and maintenance. If installers are not experienced in procedures, provide instruction by manufacturer's representatives. Include a detailed review of the following items:

1. Record documents
2. Spare parts and materials
3. Tools
4. Cleaning
5. Warranties and bonds

3.2 FINAL CLEANING

A. General:
General cleaning during construction is required by the General Conditions and included in Section "Temporary Facilities".

B. Cleaning:
Employ experienced workers or professional cleaners for final cleaning. Clean each surface or unit to the condition expected in a normal, commercial building cleaning and maintenance program. Comply with manufacturer's instructions.

1. Complete the following cleaning operations before requesting inspection for Final Acceptance.

kk. Remove labels that are not permanent labels.

ll. Clean exposed exterior hard-surfaced finishes to a dust-free condition, free of stains, film and similar foreign substances.

mm. Clean the site, including landscape development areas, of rubbish, litter and other foreign substances. Sweep paved areas broom clean; remove stains, spills and other foreign deposits. Rake grounds that are neither paved nor planted, to a smooth even-textured surface.

C. Removal of Protection:

Remove temporary protection and facilities installed for protection of the Work during construction.

D. Compliance:

Comply with regulations of authorities having jurisdiction and safety standards for cleaning. Do not burn waste materials. Do not bury debris or excess materials on the Owner's property. Do not discharge volatile, harmful or dangerous materials into drainage systems. Remove waste materials from the site and dispose of in a lawful manner.

1. Where extra materials of value remaining after completion of associated Work have become the Owner's property, arrange for disposition of these materials as directed.

END OF SECTION

PART 1 -GENERAL

A. During its progress, the Work and the adjacent areas affected thereby shall be kept cleaned up and all rubbish, surplus materials, and unneeded construction equipment shall be removed and all damage repaired so that the public and property owners will be inconvenienced as little as possible.

B. Where material or debris has washed or flowed into or been placed in existing watercourses, ditches, gutters, drains, pipe structures, as a result of Work done under this contact, or elsewhere during the course of the Contractor's operations, such material or debris shall be entirely removed and satisfactorily disposed of during the progress of the Work, and the ditches, channels, drains, pipes, structures, and work, etc., shall upon completion of the Work, be left in a clean and neat condition.

C. On or before the completion of the Work, the Contractor shall, unless otherwise especially directed or permitted in writing, tear down and remove all temporary buildings and structures built by him; shall remove all temporary works, tools, and machinery or other construction equipment furnished by him; shall remove, acceptably disinfect, and cover all organic matter and material containing organic matter in, under, and around privies, houses, and other buildings used by him; shall remove all rubbish from any grounds which he has occupied; and shall leave the roads and all parts of the premises and adjacent property affected by his operations in a neat and satisfactory condition.

D. Upon completion of the Work, the Contractor shall remove from the sites of the subsurface explorations all of his plant, machinery, tools, equipment, temporary work, and surplus materials; shall, unless otherwise directed or permitted in writing, remove all rubbish from any grounds which he has occupied; and shall leave the roads and all parts of the premises and adjacent property affected by his operations in a neat and satisfactory condition.

E. The Contractor shall thoroughly clean all materials installed by him and his subcontractors, and on completion of the Work shall deliver it undamaged and in fresh and new-appearing condition.

F. The Contractor shall restore or replace, when and as directed, any public or private property damaged by his Work, equipment, or employees, to a condition at least equal to that existing immediately prior to the beginning of operations. To this end, the Contractor shall do as required all necessary highway or driveway, walk, and landscaping work. Suitable materials, equipment, and methods shall be used for such restoration. The restoration of existing property or structures shall be done as promptly as practicable as work progresses and shall not be left until the end of the contract period.

G. The Contractor shall submit a Waste Plan and secure a Waste permit from the VI Waste Management Authority

END OF SECTION

PART 1 - GENERAL

A. The Contractor shall warrant all materials, products, and workmanship provided by the Contractor under the Contract for a period of twelve (12) months after the date of final acceptance of the Work by the Owner.

B. If, during the warranty period: (a) Any materials or products furnished and/or installed by the Contractor are found to be defective in service by reason on the Contractor's faulty process, structural and/or mechanical design or Specifications; or (b) Any materials, or products furnished by the Contractor shall, as soon as possible after receipt of such defective materials or products, or replace such defective materials or products.

PART 2 - START-UP OF OPERABLE COMPONENTS

A. Because of the need to maintain operation during construction, it will be necessary to accept operable components of the project at various times prior to the completion and final acceptance of the entire project.

B. A component of the project, as used herein, shall include all associated structures, paving, piping, etc.

C. When a component of the project has been completed, checked out, and made ready for operation, the Contractor shall notify the Owner's Representative/Engineer in writing that the component is substantially complete and request an inspection for substantial completion. The Owner will schedule the inspection within ten (I0) days of the Contractor's request. If he concurs in the Contractor's statement, the Owner's Representative/Engineer will notify the Contractor in writing that the component is accepted as substantially complete. At the same time, the Owner's Representative/Engineer will submit to the Contractor a list of items that must be completed or corrected before final acceptance can be given.

D. If a component of the project is needed in order to maintain operation during construction and if it has been accepted as substantially complete, the Contractor shall start up the component when directed by the Owner. Once the component has achieved stable and satisfactory operation (minimum 95 percent availability over a 7- day period), the Contractor shall request beneficial occupancy by the Owner. The Department, if they concur in the Contractor's statement, that stable and satisfactory operation has been achieved, will notify the Contractor in writing within ten (10) days that he is assuming beneficial occupancy of the component.

E. On the date that the Department assumes beneficial occupancy, the following shall occur:

1. The one-year warranties for the component specified in Part 1-A of this section will begin

2. The Owner will assume responsibility for operating and maintaining the component

END OF SECTION

PART 1 - GENERAL

1.1 RELATED DOCUMENTS:

A. Drawings and general provisions of the Contract, including General and Supplementary Conditions and other Division 1 Specification Sections, apply to this Section.

1.2 SECTION INCLUDES:

A. Project Record Document submittal.

B. Operation and Maintenance manuals.

C. Warranties, Bonds, Extra Stock, Permits, and Manuals.

1.3 SUBMITTALS:

A. Project Record Documents:
Submit documents to Owner. The following submittal procedure shall occur prior to Final Acceptance.

1. Submit original copy of as-built drawings (Drawings & Specifications) to Owner for review.

2. Compile and organize any drawings or schedules in the Project Manual onto sheets of the same size as the Contract Drawings and into electronic files to submit with other record documents.

3. Contractor will be notified within 15 work days if the submitted documents are acceptable.

4. Should the submittal be unacceptable for any reason, the Contractor shall make requested modifications and resubmit to the Owner. Continue to resubmit as necessary until the submittal is acceptable.

5. Upon acceptance of the submittal, Owners Engineer will, within 30 work days, incorporate the Contractor's as-built drawings into the Owner's Engineer's original Contract Documents.

B. Warranties, Bonds, Extra Stock, and Permits:

1. Obtain and assemble executed certificates, warranties, bonds, receipts for extra stock, and permits signed by any authorities having jurisdiction. These may be tabbed in the front of the General Operation and Maintenance Manual provided they do not over-fill the binder.

2. Verify that documents are in proper form and contain full information.

3. Include originals of each in operation and maintenance manual, indexed separately on Table of Contents.

4. Co-execute submittals when required.

5. Submittal of warranties, bonds, extra stock and permit manual to match submittal requirements.

6. Provide Table of Contents neatly typed, in complete and orderly sequence. Include complete information for each of the following:

   nn. Product or work item;

   oo. Firm, with name of principal, address, and telephone number;

   pp. Scope;

   qq. Date of beginning of warranty or service and maintenance contract;

   rr. Duration of warranty or service maintenance contract;

   ss. Proper procedure in case of failure;

   tt. Instances which might affect validity of warranty or bond; and

   uu. Contractor, name or responsible principal, address, and telephone number.

7. Make submittals within ten days after Date of Substantial Completion.

8. For items of Work for which acceptance is delayed beyond Date of Substantial Completion, submit within ten days after acceptance, listing the date of acceptance as the beginning of the warranty period.

PART 2 - PRODUCTS

2.1 PROJECT RECORD DOCUMENTS:

A. Project Record Documents include the following:

1. Marked-up copies of Contract Drawings.

2. Marked-up copies of Project Manuals (Specifications and Detail Book, as applicable), all volumes.

3. Addenda.

4. Reviewed and marked-up copies of shop drawings and product data.

5. Newly prepared drawings.

6. Change Orders, RFIs and other modifications to the Contract issued in printed form during construction.

7. Owner's Representative's Clarifications and Pricing Request with all supporting documentation.

8. Field Authorizations.

9. Record Samples.

10. Field records for variable and concealed conditions.

11. Record information on Work that is recorded only schematically.

12. Manufacturer's instruction for assembly, installation, and adjusting.

13. Other miscellaneous record documents as listed below and applicable.

    vv. Field records on excavations and foundations.

    ww. Field records on underground construction and similar work.

    xx. Survey showing locations and elevations of underground lines.

    yy. Invert elevations of drainage piping.

    zz. Surveys establishing building lines and levels.

    aaa. Authorized measurements utilizing unit prices or allowances.

    bbb. Records of plant treatment.

    ccc. Ambient and substrate condition tests.

    ddd. Certifications received in lieu of labels on bulk products.

    eee. Batch mixing and bulk delivery records.

    fff. Testing and qualification of tradesmen.

    ggg. Documented qualification of installation firms and/or personnel.

    hhh. Load and performance testing.

    iii. Inspections and certifications by governing authorities.

    jjj. Leakage and water-penetration tests.

    kkk. Final inspection and correction procedures.

PART 3 -EXECUTION

3.1 PROJECT RECORD DOCUMENTS:

A. Maintenance of Documents and Samples:

1. Store and maintain in field office apart from the Contract Documents used for construction, one complete set of record documents and samples which are used to record as-built conditions.

2. Do not use Project Record Documents for construction purposes; protect from deterioration and loss in a secure fire-resistant location. Maintain record documents in good order and in a clean, dry, legible condition.

3. Always make record documents and samples available for review by Owner's Representative and the Owner.

4. Record actual revisions to the Work concurrent with construction progress.

5. Ensure entries are complete and accurate, enabling future reference by Owner.

lll. Following each month Progress Schedule Meeting, Contractor shall meet with all major subcontractors whose work is in progress at the site, including, but not limited to mechanical, plumbing, electrical, security, fire protection, civil, and as otherwise designated, to review all "as-built" revisions on the day-by-day working set of "Project Record Copy" and verify installed record information from the previous moth is properly recorded on the day-by-day "Project Record Copy," with all revisions and pertinent information clearly indicated.

B. Record Drawings and Shop Drawings:

A clean, undamaged set of Contract Drawings including coordination drawings and shop drawings shall be kept at the job site as "as-built" record documents. Record "as-built drawings shall be comprised of all sheets contained in the Contract Drawings, as well as all special equipment or system drawings.

1. Mark the set to show the actual installation where the installation varies substantially from the Work as originally shown. Mark whichever drawings that show conditions fully and accurately. Where shop drawings, RFIs or other communication record are used to identify a change, record a cross-reference at the corresponding location on the Contract.

2. Drawings:

Give attention to concealed elements that would be difficult to measure and record at a later date. Items required to be marked include, but are not limited to, the following:

mmm. Indicate field changes of dimension and detail.

nnn. RFIs.

ooo. Depths of foundations below the First Floor.

ppp. Horizontal and vertical measurements of underground services and utilities referenced to the building or other permanent construction.

qqq. Note changes of directions and locations, by dimensions and Elevations, as utilities are actually installed.

rrr. Show measured locations of construction-concealed internal utilities and appurtenances referenced to visible and accessible features of the structure.

sss. Record accurate locations of piping, valves, and the like.

ttt. Revisions to electrical circuitry.

uuu. Indicate details not on original Contract Drawings.

vvv. "X-out" conditions not constructed and appropriately annotate "note constructed" to convey the actual "as-constructed" condition.

3. Mark record sets in a clear, legible manner, using red ink (no pencils); use other colors to distinguish between variations in separate categories of the work. Use 'whiteout' to erase errors.

4. Mark new information that is important to the Owner, but which was not shown on the Contract Documents or Shop Drawings.

5. Show Addenda items, Change Orders, RFI, or other means of communication used in the construction process.

6. Show and date revisions to drawings with a "cloud" drawn around the revision.

7. Organize record drawing sheets in manageable sets, bind with durable paper cover sheets, and print suitable titles, dates, and other identification on the cover of each set. Where shop drawings, RFIs, or other communication record is used as a reference, include a copy of it as part of the Record Drawings.

8. Shop Drawings:

www. Maintain as record documents; legibly annotate to record changes made after review.

xxx. Include subcontractor reproducible shop drawings including as a minimum where applicable to the project, and others as deemed appropriate. Record Drawing shop drawings shall be easily reproducible; as appropriate and approved by the Owner.

C. Project Manual(s):

During the construction period, maintain one complete copy of the Project Manual(s), including Specifications, Detail Book(s), addenda, and one copy of other written Construction Documents, such as Change Orders, and RFIs issued in printed form during construction.

1. Legibly mark these documents in red ink to show substantial variations in actual work performed in comparison with the text of the Specification and modifications. Give particular attention to substations, selection of options, and similar information on elements that are concealed or cannot otherwise be readily discerned later by direct observation. Note related Record Drawing information and product data. Record at each product section description of actual products installed, including the following:

   yyy. Product substitutions or alternates utilized.

   zzz. Changes made by Addenda and modifications.

2. Mark Detail Book schedules, details, etc., to indicate the actual installation where the installation varies from the indicated in the Detail Book and modification issued. Complete information in accordance with paragraph for all detail drawings.

3. Each prime contractor (Subcontractor) is responsible for marking up Sections that contain its own Work.

4. General Contractor shall be responsible for collecting marked-up Sections that contain its own work.

5. General Contractor shall be responsible for submitting the complete set of record Specifications as specified.

D. Record Product Data:

1. Maintain one copy of each data Submittal, and mark-up variations in actual work in comparison with submitted information. Include both variations in product as delivered to the site, and variations from manufacturer's instruction and recommendations for installation.

2. Give attention to concealed products and portions of the work which cannot otherwise be readily discerned at a later date by direct observation. Note related Change Orders and mark- up of Record Drawings and Project Manuals.

3. Note related Change Orders and mark-up of record Drawings, where applicable.

4. Upon completion of mark-up, submit complete set to Owner’s Representative for Owner's records.

5. Where record Product Data is required as part of maintenance manuals, submit marked-up Product Data as an insert in the manual instead of submittal as record Product Data.

6. Each prime contractor (Subcontractor) shall be responsible for marking up and submitting record Product Data for its own Work.

7. Insofar as possible, insert record product data in individual sub-sections of O&M Manuals. Refer to 3.05 below.

E. Record Sample Submittal:
Immediately prior to date(s) of substantial completion, Owner's Engineer will meet with Contractor at site, and will determine which (if any) of submitted samples maintained by Contractor during progress of the work are to be transmitted to Owner for record purposes. Comply with *NE's* instructions for packaging, identification marking, and delivery to Owner's sample storage place.

F. Miscellaneous Record Submittals:
Refer to paragraph above for listing of miscellaneous record documents and to other Sections of these specifications for requirements of miscellaneous record-keeping and submittals in connection with actual performance of the work. Immediately prior to date of Substantial Completion, complete miscellaneous records and place in good order, properly identified and bound or filed, ready for continued use and reference. Submit to the Owner for their records.

3.2 OPERATION AND MAINTENANCE DATA- GENERAL:

A. For Each Product:
List names, addresses and telephone numbers of Subcontractors and suppliers, including local source of supplies.

B. Product Data:
Mark each sheet to clearly identify specific products and component parts, and data applicable to installation. Delete inapplicable information.

C. Drawings:
Supplement product data to illustrate relations of component parts of systems, to show control and flow diagrams. Do not use Project Record Documents as maintenance drawings.

D. Typed Text:
As required to supplement product data. Provide logical sequence of instructions for each procedure, incorporating manufacturer's instructions.

3.3 OPERATION AND MAINTENANCE DATA FOR EQUIPMENT AND SYSTEMS: (NOT USED)

3.4 OPERATION AND MAINTENANCE DATA FOR MATERIALS AND FINISHES: (NOT USED)

3.5 OPERATION AND MAINTENANCE MANUALS: (NOT USED)

3.6 WARRANTIES, BONDS, AND PERMIT MANUAL:

A. Project Warranty-General:

1. If, within one (l) year after the Date of Substantial Completion of the Work, or designated portion thereof, or within such longer period of time as may be prescribed by law or by the terms of any applicable special warranty required by the Contract Documents, any of the Work is found to be defective or not in accordance with the Contract Documents, the Contractor, and where applicable, his subcontractor that portion of the work, shall correct it promptly after receipt of a written notice from the Owner or Owner's Representative to do so. This obligation shall survive Termination of the Contract. The Owner will give such notice promptly after discovery of the condition.

2. Refer to Section 01 78 36 for administrative and procedural requirements for tracking project warranty issues subsequent to date of Substantial Completion.

B. Categories of Specific Warranties:

1. Warranties on the work are in several categories, including those of General Conditions, and including (but not necessarily limited to) the following specific categories related to individual units of work specified in the technical sections of these specifications.

   aaaa. Special Project Warranty (Guarantee):
   A warranty specifically written and signed by Contractor for a defined portion of the work; and, where required, countersigned by subcontractor, installer, manufacturer or other entity engaged by Contractor.

   bbbb. Specified Product Warranty:
   A warranty which is required by contract documents, to be provided for a manufactured product incorporated into the work; regardless of whether manufacturer has published warranty without regard for specific incorporation of product into the work, or has written and executed warranty as a direct result of contract document requirements.

   cccc. Coincidental Product Warranty:
   A warranty which is not specifically required by contract documents (other than as specified in this section); but which is available on a product incorporated into the work, by virtue of the fact that manufacturer of product has published warranty in connection with purchases and uses of product without regard for specific applications except as otherwise limited by terms of warrantee.

2. Refer to individual sections for the determination of units of work which are required to be specifically or individually warranted, and for the specific requirements and terms of those warranties (or guarantees).

C. Disclaimer and Limitations:
   Manufacturer's disclaimers and limitations on product warranties do not relieve the Contractor of the warranty on the Work that incorporates the products. Manufacturer's disclaimers and limitations on product warranties do not relieve suppliers, manufacturers, and subcontractors required to countersign special warranties with the Contractor.

D. General Limitations:

It is recognized the specific warranties are intended primarily to protect the Owner against failure of the work to perform as required, and against deficient, defective, and faulty materials and workmanship, regardless of sources.

E. Related Damages and Losses:

1. General:

In connection with Contractor's correction of warranted work which has failed, remove and replace other work of project which has been damages as a result of such failure, or must be removed and replaced to provide access for correction of warranted work.

2. Consequential Damages:

Except as otherwise indicated or required by governing regulations, Special project warranties and product warranties are not extended to cover damage to building contents (other than work of Contract), which occurs as a result of failure of warranted work.

F. Except for items put into use with Owner's permission, leave date of beginning of time of warranty until the Date of Substantial completion is determined.

G. Reinstatement of Warranty Period:

Except as otherwise indicated, when work covered by a special project warranty or product warranty has failed and has been corrected by replacement or restoration, reinstate warranty by written endorsement for the time period starting on the date of acceptance of replaced or restored work and ending upon date original warranty would have expired if there had been no failure, with an equitable adjustment for depreciation.

H. Replacement Cost, Obligations:

Upon determination that Work covered by a warranty has failed, replace or rebuild the Work to an acceptable condition complying with requirements of Contract Documents. Contractor shall be responsible for the cost of replacing or restoring defective Work regardless of whether the Owner has benefited from use of the Work through a portion of anticipated useful service life.

I. Owner's Recourse:

Expressed warranties made to the Owner are in condition addition to implied warranties and shall not limit the duties, obligations, right, and remedies otherwise available under the law. Expressed warranty periods shall not be interpreted as limitations on the time in which the Owner can enforce such other duties, obligations, rights, or remedies.

J. Rejection of Warranties:

Owner reserves the right, at time of final acceptance or thereafter, to reject coincidental product warranties submitted by the Contractor, which in opinion of Owner tend to detract from or confuse interpretation of requirements of Contract Documents.

K. Contractor's Procurement Obligations:

Do not purchase, subcontract for, or allow others to purchase or sub-contract for materials or units of work for project where a special project warranty, specified product warranty, certification or similar commitment is required, until it has been determined that entities required to countersign such commitments are willing to do so.

L. Co-execute warranties when required. Provide originals of each for inclusion in each operation and maintenance manual.

M. Retain warranties and bonds until time specified for submittal.

END OF SECTION

PART 1 - GENERAL

1.1 RELATED DOCUMENTS

A. Drawings and general provisions of the Contract, including General and Supplementary Conditions and Division 01 Specification Sections, apply to this Section.

B. Specifications throughout all Divisions of the Project Manual are directly applicable to this Section, and this Section is directly applicable to them.

1.1 REFERENCE STANDARDS

A. The latest published edition of a reference shall be applicable to this Project unless identified by a specific edition date.

B. All reference amendments adopted prior to the effective date of this Contract shall be applicable to this Project.

C. All materials, installation and workmanship shall comply with all applicable requirements and standards.

1.2 SUBMITTALS

A. Record Documents:

1. Schedule indicating proposed sequence of operations for selective demolition Work to Owner's Representative for review prior to start of Work. Include coordination for shutoff, capping, and continuation of utility services as required, together with details for dust and noise control protection.

   a. Provide detailed sequence of demolition and removal Work to ensure uninterrupted progress of Owner's on-site operations.

   b. Coordinate with Owner's continuing occupation of portions of existing building and with Owner's partial occupancy of completed new addition.

   c. Photographs of existing conditions of structure surfaces, equipment, and adjacent improvements that might be misconstrued as damage related to removal operations. File with Owner's Representative prior to start of Work.

1.3 PROJECT CONDITIONS

A. Owner will occupy portions of the building immediately adjacent to areas of selective demolition. Conduct selective demolition Work in manner that will minimize need for disruption of Owner's normal operations. Provide minimum of 72 hours advance notice to Owner of demolition activities that will affect Owner's normal operations.

B. Owner assumes no responsibility for actual condition of items or structures to be demolished.

1. Conditions existing at time of inspection for bidding purposes will be maintained by Owner insofar as practicable. However, minor variations within structure may occur by Owner's removal and salvage operations prior to start of selective demolition Work.

C. Promptly repair damages caused to adjacent facilities by demolition Work.

D. Conduct selective demolition operations and debris removal to ensure minimum interference with roads, streets, walks, and other adjacent occupied or used facilities.

1. Do not close, block, or otherwise obstruct streets, walks, or other occupied or used facilities without written permission from authorities having jurisdiction. Provide alternate routes around closed or obstructed traffic ways if required by governing regulations.

E. Do not use cutting torches for removal until Work area is cleared of flammable materials. At concealed spaces, such as interior of ducts and pipe spaces, verify condition of hidden space before starting flame cutting operations. Maintain portable fire suppression devices during flame cutting operations.

F. Maintain existing utilities indicated to remain in service and protect them against damage during demolition operations.

1. Do not interrupt utilities serving occupied or used facilities, except when authorized in writing by authorities having jurisdiction. Provide temporary services during interruptions to existing utilities, as acceptable to governing authorities.

2. Maintain fire protection services during selective demolition operations.

3. Use water sprinkling, temporary enclosures, and other methods to limit dust and dirt migration. Comply with governing regulations pertaining to environmental protection.

a. Do not use water when it may create hazardous or objectionable conditions such as ice, flooding, and pollution.

PART 2 - PRODUCTS

2.1 GENERAL

A. All materials shall meet or exceed all applicable referenced standards, federal, state and local requirements, and conform to codes and ordinances of authorities having jurisdiction.

2.2 MATERIAL OWNERSHIP

A. Except for items or materials indicated to be reused, salvaged, or otherwise indicated to remain the Owner's property, demolished materials shall be become the Contractor's property and shall be removed from the Site with further disposition of the Construction's option.

B. Historical items, relics, and similar objects including, but not limited to, cornerstones and their contents, commemorative plaques and tablets, antiques, and other items of interest or value to the Owner, which may be encountered during demolition, remain the Owner's property. Carefully remove and salvage each item or object in a manner to prevent damage and deliver promptly to the Owner.

PART 3 - EXECUTION

3.1 PREPARATION

A. Provide interior and exterior shoring, bracing, or support to prevent movement, settlement, or collapse of areas to be demolished and adjacent facilities to remain.

B. Cease operations and notify Owner's Representative immediately if safety of structure appears to be endangered. Take precautions to support structure until determination is made for continuing operations.

C. Locate, identify, stub off, and disconnect utility services that are not indicated to remain.

1. Provide bypass connections as necessary to maintain continuity of service to occupied areas of building. Provide minimum of 72 hours advance notice to Owner if shutdown of service is necessary during changeover.

3.2 INSTALLATION

A. Installation shall meet or exceed all applicable federal, state and local requirements, referenced standards and conform to codes and ordinances of authorities having jurisdiction.

B. All installation shall be in accordance with manufacturer's published recommendations.

3.3 DEMOLITION

A. Perform selective demolition Work in a systematic manner. Use such methods as required to complete Work indicated on Drawings in accordance with demolition schedule and governing regulations.

B. Demolish concrete and masonry in small sections. Cut concrete and masonry at junctures with construction to remain using power driven masonry saw or hand tools; do not use power driven impact tools.

C. Locate demolition equipment throughout structure and promptly remove debris to avoid imposing excessive loads on supporting walls, floors, or framing.

D. Provide services for effective air and water pollution controls as required by local authorities having jurisdiction.

E. Demolish foundation walls to a depth of not less than 12 inches below existing ground surface. Demolish and remove below grade wood or metal construction. Break up below grade concrete slabs.

F. For interior slabs on grade, use removal methods that will not crack or structurally disturb adjacent slabs or partitions. Use power saw where possible.

G. Completely fill below grade areas and voids resulting from demolition Work. Provide fill consisting of approved earth, gravel, or sand, free of trash and debris, stones over 6 inches in diameter, roots, or other organic matter.

H. Remove culvert or sewer pipe for reuse by careful excavation of all material on the top and sides so that the pipe will not be damaged. Removal of sewer appurtenances shall be included for removal with the pipe. Remove pipe which are unsatisfactory for reuse, and dispose of, off the Project Site.

I. Concrete parts of structures below the permanent ground-line shall be neatly squared off with reinforcement cut off close to the concrete.

J. Dismantle steel structures or steel portions of structures in sections determined by the Owner's Representative.

1. The sections shall be of such weight and dimensions which permit convenient handling, hauling and storing.

2. Rivet and bolts connecting steel rail members, steel beams or girder spans and steel stringers of truss spans will be removed by cutting the heads with a cold cut then punching or drilling by a method that will not injure the member for reuse.

3. The removal of rivets and bolts from connections will not be required unless specifically indicated.

4. Unless otherwise specified, the Contractor shall have the option of dismantling these members by flame cutting immediately adjacent to the connection.

5. Flame-cutting will not be permitted when Drawings call for the structural unit to be salvaged in such a manner as to permit re-erection. In such cases, all members shall be carefully dismantled without damage, match marked with paint, and all rivets and bolts removed from the connections.

K. Remove brick and stone structures by sledging the masonry into removal sizes. Portions of such structures below the permanent ground-line, which will not in any manner interfere with the proposed construction, may be left in place, but removal shall be carried at least two feet below the permanent ground-line and neatly squared off.

L. If unanticipated mechanical, electrical, or structural elements that conflict with intended function or design are encountered, investigate and measure both nature and extent of the conflict. Submit report to Owner's Representative in written, accurate detail. Pending receipt of directive from Owner's Representative, rearrange selective demolition schedule as necessary to continue overall job progress without undue delay.

3.4 EXCAVATION AND BACKFILL

A. Back-fill to the level of the original ground-line, all excavation made in, and all openings below, the natural ground-line caused by the removal of old structures or portions thereof.

B. That portion of the back-fill which will support any portion of the roadbed or paving shall be placed in layers of the same thickness as those required subgrade preparation.

1. Material in each layer shall be wetted uniformly, if required, and shall be compacted to the density required in the adjoining embankment. In places inaccessible to blading and rolling equipment, mechanical or hand tampers shall be used to obtain the required compaction.

2. Place that portion of the back-fill which will not support any portion of the roadbed or paving in such a manner, and compact, to preclude settling.

3.5 DISPOSAL OF DEMOLISHED MATERIALS

A. Remove from building Site debris, rubbish, and other materials resulting from demolition operations. Transport and legally dispose off Site.

1. If hazardous materials are encountered during demolition operations, comply with applicable regulations, laws, and ordinances concerning removal, handling, and protection against exposure or environmental pollution.

2. Burning of removed materials is not permitted on the Project Site.

3.6 CLEANUP AND REPAIR

A. Upon completion of demolition Work, remove tools, equipment, and demolished materials from the Project Site. Remove protections and leave interior areas broom clean.

B. Repair demolition performed in excess of that required. Return elements of construction and surfaces to remain to condition existing prior to start operations. Repair adjacent construction or surfaces soiled or damaged by selective demolition Work.

END OF SECTION

PART 1 -GENERAL

1.1 DESCRIPTION

A. Work Included in This Section:

1. Provide all1abor, materials, equipment, and services, etc., required to furnish and install all cast-in-place plain and reinforced concrete work, as indicated on the Drawings, Specified herein, or otherwise required for a complete and proper job.

B. The Work shall include, but shall not necessarily be limited to:

1. Forms, shoring, reinforcing, reinforcing accessories, and form removal.

2. The furnishing, placing, finishing, curing, and protection of all above and below grade, plain and reinforced, architectural and non-architectural concrete including but not necessarily limited to:

a. Foundations and footings.

b. Walls, pilasters, beams, lintels, columns, pits and piers.

c. Slabs-on-grade

d. Ramps.

e. Cast-in-place stairs.

f. Encasements, miscellaneous fills and enclosures.

g. Equipment bases and housekeeping pads (as required for all trades).

h. Site work concrete: walks, ramps, stairs, islands, curbs, walls, wall caps, headwalls, pads, bases, platforms, cradles, encasements, thrust blocks, etc.

3. Installation of embedded items (pipe sleeves, duct sleeves, keys, chases, boxes, bolts, anchors, reglets, inserts, expansion joint covers, etc.) furnished by other trades.

4. Cutting and patching existing concrete.

C. Related Work Specified Elsewhere:

1. SECTION 05300: STEEL DECKING

2. SECTION 05500: MISCELLANEOUS METAL WORK

1.2 SUBMITTALS

A. Product Data:

Submit manufacturers' technical data, application, and installation instructions for each type of manufactured materials and product indicated.

1. Mix Designs: Submit concrete mix designs with two (2) cylinder test results by a qualified independent testing laboratory for each type of concrete to be used, not less than ten (10) days prior to placement. NOTE: If concrete is to be pumped, separate mix design(s) shall be required. If admixtures are to be included in the mix, provide mix design with test results. Indicate quantities of mix water for addition at project site.

B. Shop Drawings:

1. Submit reinforcing steel shop drawings detailing, bending, and placing of reinforcements, and bar lists in accordance with ACI 315 "Manual of Standard Practice for Detailing Concrete Structures".

2. Submit for information only, formwork shop drawings prepared by or under the supervision of a qualified professional engineer detailing fabrication, assembly, and support of formwork. Submit formwork, joint, and tie layout shop drawings for all architectural concrete. The Project Manager will review these drawings for aesthetic considerations only. All form design and engineering shall remain the exclusive responsibility of the Contractor.

3. Submit proposed schedule and sequence of stripping form work, shoring removal, and installing and removing re-shoring.

C. Certificates:

Submit certificates for welding procedures and personnel. Submit material certificates signed by the manufacture certifying materials comply with the project requirements for the following:

1. Cementitious materials and aggregates.

2. Form materials and form release agents.

3. Steel reinforcement and reinforcement accessories.

4. Fiber reinforcement.

5. Admixtures.

6. Curing materials.

7. Bonding agents.

8. Adhesives.

9. Vapor retarders.

10. Epoxy joint filler.

11. Joint filler strips.

12. Repair materials.

1.3 TESTING AND INSPECTIONS

A. Testing and inspection shall be performed as required by the building code, the Contract Documents, or as otherwise directed by the Project Manager. The Contractor shall employ a testing laboratory for the purpose of testing concrete, inspecting reinforcements and submitting reports. The cost of testing and inspections shall be paid for by the Contractor.

B. The Contractor shall arrange and coordinate all testing and inspections and shall give the Owner's Representative and Project Manager a minimum of forty-eight (48) hours' notice before each concrete pour.

C. Sampling and testing for quality control during concrete placement may include the following, as directed by the Project Manager:

1. Slump: ASTM C-143; one test at point of discharge for each day's pour of each type of concrete; additional tests when concrete consistency seems to have changed.

2. Air Content: ASTM C-173; volumetric method for lightweight or normal-weight concrete; ASTM C-231, pressure method for normal-weight concrete; one for each day's pour of each type of concrete mix.

3. Concrete Temperature: ASTM C-1064; one test hourly when air temperature is 80 degrees F and above, and one test for each set of compressive strength specimens.

4. Compression Test Specimen: ASTM C-31; one set of four standard cylinders for each compressive strength test, unless otherwise directed. Mold and store cylinders for laboratory cured test specimens except when field cured test specimens are required.

5. Compressive Strength Tests: ASTM C-39; one set for each day's pour exceeding 5 cu.yd. plus additional sets for each 50 cu.yd. more than the first 25 cu.yd. of each concrete class placed in any one day; one specimen tested at 7 days, two specimens tested at 28 days, and one specimen retained in reserve for later testing if required.

   a. Should tests yield compressive strengths equal to or exceeding 28-day minimum requirements, discontinue testing of remaining cylinders for that sample lot.

   b. Specimens in reserve are to be disposed of upon completion of the Project.

6. Unit Weight: ASTM C567, fresh unit weight of structural lightweight concrete; one test for each composite sample, but not less than one test for each day's pour of each concrete mix.

D. When frequency of testing will provide fewer than five strength tests for a given class of concrete, conduct testing from at least five randomly selected batches or from each batch if fewer than five are used.

E. When total quantity of a given class of concrete is less than 50 cu. yd. the Project Manager may waive strength testing if adequate evidence of satisfactory strength is provided.

F. When strength of field cured cylinders are less than 85 percent of companion laboratory cured cylinders, evaluate current operations and provide corrective procedures for protecting and curing the in place concrete.

G. Strength level of concrete will be considered satisfactory if averages of sets of three consecutive strength test results equal or exceed specified compressive strength and no individual strength test result falls below specified compressive strength by more than 500 psi.

H. Test results will be reported in writing to the Owner's Representative, Project Manager, Structural Engineer, Contractor, concrete manufacturer, and Building Inspector within 2 working days. Reports of compressive strength tests shall contain the project identification name and number, date of concrete placement, name of concrete testing service, concrete type and class, location of concrete batch in structure, design compressive strength at 28 days, concrete mix proportions, and materials, compressive breaking strength, and type of break for both 7 day and 28 day tests.

I. Contractor shall pay for testing conducted and any other additional testing as may be required when unacceptable concrete is verified.

J. The Contractor shall remove and replace, or strengthen, as determined by the Project Manager, all concrete work for which test results fall below the specified requirements.

K. Early (4-day) concrete cylinder breaks to facilitate the Contractor's schedule and operations shall be paid for by the Contractor.

1.4 PRECAUTIONS

A. No aluminum of any kind (conduit, wire, reglet, inserts, etc.) shall be placed in concrete work, except where contact surfaces are coated with an epoxy paint, approved by the Project Manager.

B. Use no form release agents containing materials that may affect a satisfactory finish and/or adhesion of materials to be applied to concrete by other sections.

C. Slab curing agents other than water may be used, with prior written approval.

D. No conduits, pipes, ducts, or other non-structural components of any kind shall be placed in concrete slabs, without the Project Manager's prior written authorization.

1.5 QUALITY ASSURANCE

A. Codes and Standards:

All concrete shall be placed, cured, and tested in accordance with all applicable sections of the American Concrete Institute (ACI) specifications, latest edition, including but not limited to the following, except where more stringent requirements are shown or specified:

1. ACI 117- "Specification for Tolerances for Concrete Construction and Materials".
2. ACI 211.1- "Standard Practice for Selecting Proportions for Normal, Heavyweight, and Mass Concrete".
3. ACI 301- "Structural Concrete for Buildings".
4. ACI 302.1- "Guide for Concrete Floor and Slab Construction".
5. ACI 304- "Recommended Practice for Measuring, Mixing, Transporting and Placing Concrete".
6. ACI 305R- "Hot Weather Concreting".
7. ACI 308- "Standard Practices for Curing Concrete".
8. ACI 311- "Recommended Practice for Concrete Inspection".
9. ACI 315- "Standard Practice for Detailing Reinforced Concrete Structures".
10. ACI 318- "Building Code Requirements for Reinforced Concrete".
11. ACI 347- "Recommended Practice for Concrete Formwork"
12. Concrete Reinforcing Steel Institute (CRSI) "Manual of Standard Practice".

B. Installer Qualifications:
Shall be an experienced installer who has completed concrete work similar in materials, design, and extent to that required for this project, with a record of successful completions.

C. Professional Engineer Qualifications for services related to formwork, shoring and re-shoring installation:
Shall be a professional engineer, licensed in the United States Virgin Islands, experienced in providing engineering services of this type.

D. Ready-mix Plant Qualifications:
Shall be a firm experienced in the manufacture of ready mixed concrete products complying with ASTM C94 requirements for production facilities and equipment. Manufacturer shall be certified according to the National Ready Mixed Concrete Association's Certification of Ready Mixed Concrete Production Facilities.

E. Obtain each type of class of cementitious materials of the same brand from the same manufacturer's plant, each aggregate from one source and each admixture from the same manufacturer.

F. Qualify procedures and personnel according to AWS Dl.4 Structural Welding Code- Reinforcing Steel".

G. Pre-installation Meeting:
A pre-installation meeting to review cast-in-place concrete project requirements shall be attended by the Contractor, General Superintendent, Concrete Sub-contractor, ready-mix producer, testing and inspection agency, Owner's Representative and Project Manager.

1.6 PRODUCT HANDLING

A. Protection:
Protect materials during transit, on-site storage, and handling to prevent deterioration and damage. Reinforcing steel shall be stored off the ground in an orderly manner to facilitate access and usage in designated locations. Repair epoxy coating on steel reinforcement according to ASTM D3963 and ASTM D3963M.

PART 2 - PRODUCTS

2.1 FORM MATERIALS

A. Forms for Exposed Concrete:
Shall be exterior grade plywood, equal to American Plywood Association B-B Plyform, in excellent condition, free of dents, scratches or surface deposits. Forms for architectural concrete shall be HDO (High Density Overlaid) Plyform, in "like-new" condition. Use appropriate thickness of Class I, II or Structural I Plyform as recommended by APA for specific installations.

B. Forms for Concealed Concrete:
May be Plyform, matched dressed lumber or steel.

C. Forms for Cylindrical Columns, Pedestals, and Supports:
Shall be metal, glass fiber reinforced plastic, paper or fiber tubes that shall provide surfaces with gradual or abrupt irregularities not exceeding specified formwork surface class. Provide units with sufficient wall thickness to resist plastic concrete loads without detrimental deformation.

D. Pan-Type Forms:
Glass fiber reinforced plastic or formed steel stiffened to resist plastic concrete loads without detrimental deformation.

E. Void Forms:
Biodegradable paper surface, treated for moisture resistance, structurally sufficient to support weight of plastic concrete and other superimposed loads.

F. Chamfer Strips:
Shall be wood, metal, PVC, or rubber strips, 3/4 by 3/4 inch minimum.

G. Form Ties and Spreaders:

Shall be factory fabricated, adjustable length, removable or snap-off metal or glass fiber reinforced plastic form ties designed to prevent form deflection and to prevent spalling of concrete upon removal. Provide units that will leave no metal closer than one (1) inch to the plane of the exposed concrete surface. Do not use wire ties and wood spreaders. Where concrete is to remain exposed to view or painted, ties shall have removable tapered plastic cones of no greater than one (1") inch outside diameter. Ties for walls below grade and wall indicated to receive damp proofing or waterproofing shall incorporate water seal washers.

H. Form Release Agent:
Shall be a commercial formulation with a maximum of 350 mg/1 volatile organic compounds that will not bond with, stain or adversely affect concrete surfaces and will not impair subsequent treatments of concrete surfaces.

I. Keyed Slab-On-Grade Form:
Shall be 24-ga. Hot dipped galvanized steel with interlocking support stakes, and dowel bar knockouts, "Model Pro-Key" as manufactured by BoMetals, Inc., or approved equal. Provide appropriate form depth for slab depth as indicated on the Drawings.

2.2 REINFORCING MATERIALS

A. Reinforcing Bars:
Shall be deformed bars complying with ASTM A-615 A and M, Grade 60. Low alloy deformed steel reinforcing bars shall conform to STM A706 A and M. Fabricated deformed epoxy coated reinforcing shall comply with ASTM A934 A and M. Steel bar mats shall conform to ASTM A184 A and M, and shall be assembled with clips.

B. Welded Wire Fabric:
Deformed steel wire shall conform to ASTM A496, and sheets shall conform to ASTM A497, provide in flat sheets. Epoxy coated wire shall conform to ASTM A884 A and M, Class A, plain or deformed as indicated on the Drawings and fabric shall conform to ASTM A884 A and M, Class A.

C. Supports for Reinforcement:
Shall include, but are not limited to: spacers, chairs, ties, bolsters, and other devices for spacing, supporting, and fastening reinforcing bars and welded wire fabric. Supports shall conform to CRSI "Manual of Standard Practice".

1. For concrete surfaces exposed to view where legs of wire bar supports contact forms, use CRSI Class 1 plastic protected or CRSI Class 2 stainless steel bar supports.

2. For epoxy coated reinforcement, use epoxy coated or other dielectric polymer coated wire bar supports.

D. Joint Dowel Bars:
Shall be plain steel bars conforming to ASTM A615 A and M, Grade 60, or epoxy coated bars conforming to ASTM A775A and M Grade 60, as indicated on the Drawings. Cut bars true to length with ends square and free of burrs.

E. Repair Materials:
For epoxy, shall be liquid epoxy repair coating compatible with epoxy coating complying with ASTM A775 A and M.

2.3 CONCRETE MATERIALS

A. Portland Cement:
Shall comply with ASTM C-150, Type II. Only one brand of cement shall be used throughout the project.

B. Concrete Aggregates shall conform to the following requirements:

1. Fine Aggregate:
Shall comply with ASTM C-33 and consist of clean, hard, tough and preferably siliceous material (sand), free from mineral or other coatings, soft particles, clay, loam, or other deleterious matter. Materials for exposed concrete shall come from a single source.

2. Coarse Aggregate (normal weight):
Shall comply with ASTM C-33 and consist of crushed stone or gravel having clean, hard, durable, uncoated particles, free from deleterious matter. Materials for exposed concrete shall come from a single source.

3. Coarse Aggregate (light weight):
Shall comply with ASTM C-33 and consist of cellular materials of mineral origin, such as shale, clay, slate, fly ash, or slag, either naturally occurring or produced by sintering, expansion, palletizing, or rotary kiln processes. Material shall have a dry loose weight of 55 lbs. per cu. ft. and graded from 3/4" to No. 4.

C. Mixing Water shall be potable.

D. Admixtures:
Shall be used in complete accordance with the manufacturer's directions. All admixtures shall be by the same manufacturer, who shall provide at no added cost to the Owner, the services of its representative at the job to ensure proper use of each admixture. No admixtures containing calcium chloride (chloride ions) shall be placed in concrete work. Admixtures shall be certified by the manufacturer to contain no more than 0.1 percent water soluble chloride irons by mass of cementitious materials, to be compatible with other admixtures and cementitious materials and to comply with the following:

1. Air-entraining: ASTM C-260.

2. Water-reducing and retarding: ASTM C494, Type D.

3. Corrosion-inhibiting:
Commercially formulated, anodic inhibitor or mixed cathodic and anodic inhibitor, capable of forming a protective barrier and minimizing chloride reactions with steel reinforcement in concrete.

2.4 RELATED MATERIALS

A. Curing Membrane shall be one of the following:

1. White polyethylene sheeting 4 mils thick, ASTM C171; or

2. Waterproof paper, Sisalkraft Type, ASTM C171-69 as manufactured by Fortifiber Corp., Ludlow Papers, Glas-Kraft; or

3. Jute or kenaf, approximately 9 oz. per sq. yd., complying with AASHTO M-182, Class 2.

4. Liquid membrane curing compound of resin or latex base conforming to ASTM C309 Type I, Class A. Confirm compatibility with subsequent surface treatments, sealers, surfacing materials adhesives, etc. prior to use. Product shall be "Kur-N-Seal" or "Kur-N-Seal NB" by Sonneborn, "Safe Cure & Seal" by Dayton Superior Corp., "Spray-Cure & Seal 25" by Conspec Manufacturing, or approved equal.

B. Interior Concrete Sealer:
Exposed interior concrete slabs, shall have two (2) applications of sealer in accordance with manufacturer's directions. Interior cistern surfaces receiving a waterproof epoxy need not be treated with sealers. Office area slabs to receive finish flooring or garage floors to receive 2 coats of epoxy painting shall not be treated with sealers or hardeners.

C. Exterior Concrete Sealer (Sidewalks, plazas, pads):
Shall be "Silocks Plus-WB" as manufactured by Silpro, "Sheild MX" by Conproco, or approved equal.

D. Joint Sealant for joints in slabs and walks:
Shall be self-leveling, multi-component polyurethane. Use primer as recommended by the manufacturer. Sealant shall be "THC-900" or "THC-901" (low sag as required by job conditions) as manufactured by Tremco, or approved equal such as SikaFlex. Color shall be as selected by the Project Manager.

E. Premolded Joint Filler Strips:
Shall be l/2" thick, unless otherwise noted, premolded, resilient, compressible, re- expanding, non-extruding bituminous and fiber material, made with cane fibers, uniformly saturated with not less than 35% and not more than 50% by weight of asphalt, conforming to ASTM D1751.

F. Chemical Bonding Agent:
Shall be film-forming, freeze-thaw resistant compound suitable for brush or spray application, "Daraweld-C" by W.R. Grace Company, 'Eucoweld" by Euclid Chemical Company, or approved equal.

G. Slab Vapor Retarder:

1. Shall be 10 mils thick un-reinforced polyethylene, conforming to ASTM D4397.

H. Plastic Control Joints:
Shall be "Zip Cap" type as manufactured by W.R. Meadows., Sika Corp., or approved equal. Depth shall be as required to penetrate l/4" thickness of slab.

I. Dovetail Anchor Slots:
See SECTION 04200: UNIT MASONRY AND MORTAR.

J. Repair Underlayment:
Shall be cement based, polymer modified, minimum 4,100 psi strength, self-leveling product, for edge feathering to adjacent floor surfaces. Provide a surface primer as recommended by manufacturer.

K. Repair Topping:
Shall be traffic bearing, cement based, polymer modified, minimum 5,700 psi strength, self-leveling product, application thickness from l/4 inch. Provide a surface primer as recommended by manufacturer.

L. Other Materials:
All other materials not specifically described herein, but required for a complete and proper installation, shall be as selected by the Contractor and approved by the Project Manager.

PART 3 - EXECUTION

3.1 PROPORTIONS

A. All concrete shall be ready-mixed controlled concrete and proportioned according to ACI 211 and ACI 301 for normal-weight concrete and light-weight concrete.

B. The nominal maximum size of the aggregate shall not be larger than one-fifth of the narrowest dimension between sides of forms, one-third of the depth of slabs, nor three-fourths of the minimum clear distance between reinforcing bars or between bars and forms, whichever is least. In general, 3/4" size will satisfy these requirements. Aggregate of 1-1/2" size shall be used for slabs on grade, which are 5" or more in thickness.

C. Concrete for every part of the Work shall be a homogeneous structure which, when cured, will have at least the strength required by design. The limiting values of concrete shown in Table A and the requirements hereinafter specified must be met.

D. Proportions of concrete ingredients shall be determined in advance of concreting operations by the testing laboratory and shall be such as to produce a concrete fulfilling every requirement of the Contract Documents. Advance specimen shall be tested as to compliance with this requirement by standard laboratory tests of concrete made with representative samples of the cement and aggregates, which the Contractor proposes to use for each specific portion of the Work. It shall be the Contractor's responsibility to provide the concrete strengths required and to pay the cost for a laboratory to make necessary trial mixes.

E. The design strength of the concrete in this structure is based upon ultimate strength requirements of ACI 318. The minimum strength requirement stated is the strength of the concrete at 28 days when samples are cured and tested in accordance with the recommended standards of ACI 318.

F. By the water-cement ratio is meant the total quantity of water entering the mixture, including the surface water carried by the aggregates, expressed in terms of the quantity of cement.

G. All concrete exposed to the exterior shall be air-entrained concrete, typically 6% +/- 1% by volume for 3/4" aggregate and 8% +/-1% for 3/8" aggregate. Maximum air-entrainment for exterior slabs shall be 3%. Interior floor slabs shall not be air entrained.

H. The water-cement ratio shall be expressed in U.S. gallons per sack (94 lb net) of cement.

TABLE A

Minimum Allowable Compressive Strength @ 28 Days PSI	Maximum Allowable Net Water Content Gals/Sack*	Cement Sacks Per CU. YD. Minimum Permissible **	Total Water Maximum
3500	3.5	6.0	21.0 gal/CY
4000	4.0	6.5	26.0 gal/CY

* Maximum: Decrease if possible. This represents the total water in the mix at the time of mixing, and includes free water on aggregates. Reduce net allowable water content by one gallon for air-entrained concrete.
** Minimum: Increase as necessary to meet other requirements.

I. The method of measuring water and aggregates shall be such as to secure specified proportion in each batch, and in a manner that proportion of water to cement can be closely controlled and easily checked at any time.

J. The proportions of aggregates to cement for concrete for any of this work shall be such as to produce concrete that will work readily into corners and angles of the forms and around the reinforcement without excessive puddling or spading and without permitting the materials to segregate or free water to collect on the surface.

K. Light-weight concrete mix shall be proportioned as herein specified, and shall produce strength and modulus of elasticity as noted on the Drawings, or Specified herein, with a split-cylinder strength factor (Fsp) of not less than 5.5 and a dry weight of not less than 95 lbs. or more than 100 lbs. after 28 days. Shrinkage shall be limited to 0.03% at 28 days.

L. No change in source of materials or mix shall be made without the Project Manager's authorization. Concrete mix design adjustments may be requested by Contractor when characteristics of materials, job conditions, weather, test results, or other circumstances warrant. Such adjustments shall be at no additional cost to Owner and as accepted by Project Manager. Laboratory test data for revised mix design and strength results shall be submitted to and accepted by Project Manager before using in the Work.

M. Design mix reports shall include the following information:

1. Identification of aggregate source of supply.

2. Tests of aggregate for compliance with specified requirements.

3. Scale weight of each aggregate.

4. Absorbed water in each aggregate.

5. Brand, type and composition of cement.

6. Brand, type and amount of each admixture.

7. Amounts of water used in trial mixes.

8. Proportions of each material per cu. yd.

9. Gross weight and yield per cubic yard of trial mixtures.

10. Measured slump.

11. Compressive strength results of 2 representative samples at 7 and 28 days for each type of concrete to be used.

3.2 STRENGTH COMPLIANCE

A. The following more clearly defines performance:

1. To meet the requirements of this Specification and those of ACI 318, the average of any three consecutive strength tests of laboratory-cured specimens representing each class of concrete shall be equal to or greater than the specified strength (fc), and not more than one out of ten strength tests shall have a value of less than the specified minimum strength. In addition to the above requirement, the allowed 10% of tests below the minimum required strength shall be equal to or greater than 90% of the minimum specified strength (fc).

2. Should the strengths shown by the test specimens fall below the specified design strengths, the Project Manager shall have the right to require additional curing on those portions of the structure represented by those test specimens.

3. When the tests on control specimens of concrete fall below the required strength, the Project Manager will permit, at the Contractor's expense, check tests for strengths to be made by means of Windsor Probes or typical cores drilled from the structure in accordance with ASTM C-42 and C-39. In cases of failure of the latter, the Project Manager, in addition to other resources, may require, at the Contractor's expense, load tests on any members in which such concrete was used. Load tests need not be made until concrete has aged 60 days.

3.3 DESIGN OF FORMWORK

A. The design, engineering, and safety of formwork, as well as its construction shall be the exclusive responsibility of the Contractor.

B. Exercise care in order to ensure that all formwork is properly designed, engineered and erected, and capable of safely supporting all loads and pressures. Forms shall be held to the dimensions indicated on the Drawings, with the tolerances established by ACI 117 concrete surface irregularities shall be limited as designated by ACI 347R.

C. Temporary openings shall be provided at the base of forms and at other points where necessary to facilitate cleaning and observation immediately before concrete is deposited.

D. Forms shall be sufficiently tight to prevent leakage of grout or cement paste.

E. Properly set and secure all embedded items to be furnished by other trades.

F. Properly set and secure all form applications for chamfers, reglets, rustication joints, etc., as indicated on the Drawings. Chamfer exterior corners and edges of permanently exposed concrete.

3.4 PREPARATION OF FORM SURFACES AND EMBEDDING ITEMS

A. Plywood and other wood surfaces not subject to shrinkage shall be sealed against absorption of moisture from the concrete by either: (1) a field applied approved form oil or sealer; or, (2) a factory applied non-absorbent liner. All shall be subject to review for finish appearance.

B. When forms are coated to prevent bond with concrete, it shall be done prior to placing of reinforcing steel. Excess coating material shall not be allowed to stand in puddles in the forms nor allowed to come in contact with concrete against which fresh concrete will be placed.

C. All forms shall be thoroughly cleaned before reuse.

D. The Contractor shall thoroughly review all Drawings for special formwork required at openings such as windows, louvers, doors, etc.

E. Set and build into form work anchorage devices and other embedded items required for other work that is attached to or supported by cast-in-place concrete. Set anchor rods by template to ensure proper positioning. Do not cut, core, or sleeve through footings or embed mechanical and electrical utilities in or through footings without consulting with the Project Manager, before any such cutting, coring, sleeving, or embedding is begun.

F. Do not place (embed) mechanical or electrical conduit, ducting, etc., in supported (suspended) concrete slabs.

G. At slabs, set edge forms, bulkheads, and intermediate screed strips to achieve required elevations, and contours in finished surfaces for slabs. Provide and secure units to support screed strips using strike-off templates or compacting-type screeds.

3.5 CONCRETE REINFORCEMENT

A. Reinforcing bars to be embedded in concrete shall be free of oil, dirt, loose mill scale, and loose rust. Reinforcing bars with rust, mill scale, or a combination of both will be acceptable as being satisfactory with cleaning or brushing, provided that upon wire brushing, the dimensions including height of deformations and weights of a cleaned sample shall not be less than the applicable ASTM specification requirements.

B. The placement of bars shall conform to CRSI Manual of Standard Practice, Placing Reinforcing Bars. Maintain adequate space for proper concrete cover.

C. Place no concrete before installation of the reinforcement has been reviewed by the independent inspection agency.

D. In event of displacement of any reinforcement, same shall be corrected and retied as necessary and in a satisfactory manner.

E. All splicing of bars, concrete cover, and bar spacing shall conform to "Building Code Requirements for Reinforced Concrete" (ACI 318) as published by the American Concrete Institute, and to recommended practices in "Splicing Reinforcing Bars" by the Concrete Reinforcing Steel Institute, or as hereinafter specified.

1. When necessary to splice reinforcement, bars shall be lapped at least 40 bar diameters, unless noted otherwise, placed in contact and wired. Laps shall be avoided at points of maximum stress. All rods shall be securely wired together at all intersections. No permanent device for fastening reinforcement shall be left in contact with the face of forms at exposed surfaces.

F. The welding of reinforcing bars shall be performed in accordance with "Recommended Practices for Welding Reinforcing Steel, Metal Inserts and Connections for Reinforced Concrete Construction" (AWS D12.1), as by the American Welding Society. Welders shall be qualified by tests as prescribed in the "Standard Qualification Procedures" (AWS B3.0), as published by the American Welding Society.

G. Tack welding of reinforcing steel shall not be permitted.

H. Heat bending of reinforcing steel shall not be permitted.

I. All splicing of wire fabric shall be made with fabric lapped at least 2 meshes wide and tied at 3'-0" O.C.

J. Repair all holes in vapor retarders prior to concrete placement.

3.6 MIXING

A. Ready-mixed concrete shall be mixed and delivered in accordance with the requirements set for it in ASTM C94 and ACI 614.

B. Transit-mixed concrete shall be delivered in high-lift trucks to enable it to be easily deposited in the forms.

C. The mixing shall be continuous after the water has been added to the mix in the drum, but no concrete shall be placed in the forms more than 90 minutes after the water has been added.

3.7 CONSISTENCY

A. The consistency of the concrete is mainly dependent upon the thoroughness of the mixing and the quantity of water contained in the mix. In general, the maximum slump and minimum strengths shall be as follows:

Type of Construction	Compressive Strength Required in PSI	Maximum Slump (inches)
All Exterior Concrete	4000 (air entrained)	4
Beams and Columns	4000	4
Footings	3000	4
Foundation Walls	3000	4
Slabs	4000	4
Miscellaneous Concrete	3500	4

3.8 CONCRETE PLACEMENT

A. Inspection:

Prior to placing concrete, all formwork, reinforcements and embedded items shall be complete and inspected by the inspection agency. All embedded items shall be checked for proper location, type, and quantity.

B. Prior to placing concrete:

Clean all equipment used for mixing and transporting the concrete. Remove all debris from the place to be occupied by the concrete, and check forms for dimensions, position, and adequacy.

C. Standing Water:

Water shall be removed from excavations before any concrete is deposited. Any flow of water into an excavation shall be diverted through proper side drains to a sump, or shall be removed by other approved methods that will avoid washing the freshly deposited concrete. No pumping shall be done while the concrete is being placed.

D. Conveyors and Pumps:

Convey concrete from the mixer to the place of final deposit by rapid methods that will prevent the separation or loss of the materials. Equipment for placing concrete shall be of such size and design as to ensure delivery without segregation of the materials. All shall be in accordance with ACI 614.

E. Concrete Placement:

1. Concrete shall not be placed by means of open chutes, the combined length of which exceeds 30', and shall not be allowed to drop freely through distances exceeding 6' or through loosely spaced reinforcing bars, conduits, etc., which will tend to segregate materials.

2. Place concrete as nearly as practicable in its final position to avoid segregation due to handling or flowing. No concrete that has partially hardened or been contaminated by foreign material shall be deposited on the Work.

3. Once concrete placement is started, it shall be carried on as a continuous operation until the placing of the panel, section, or individual foundation is completed, so as not to cause formation of seams and planes of weakness within the section. If a section cannot be placed continuously, construction joints as specified and as detailed on the Drawings shall be provided. The top surface shall be generally level. When construction joints are necessary, they shall be made in as specified herein.

4. Place concrete in layers not over 12" deep, and thoroughly compact by means of vibrators, hand tamping and spading. During the operation of placing, thoroughly work the concrete around reinforcement, embedded fixtures, pipes, and conduits, and into the corners of the forms so as to prevent interior voids, honeycomb, and the patching of concrete surfaces after forms are removed. Internal vibrators should be used to aid in the compaction of the concrete. Extreme care shall be used on thin sections and exposed concrete.

3.9 WEATHER PROTECTION

A. Unless adequate protection is provided and/or approval is obtained, concrete shall not be placed during rain. Rainwater shall not be allowed to increase the mixing water or to damage the surface finish.

B. Hot Weather Concrete Placement:

1. Hot weather concrete placement shall be done in accordance with the recommendations of ACI 305R.

2. Concrete deposited in hot weather shall have a material temperature that will not cause difficulty from loss of slump, flash set, or cold joints (less than 90 degrees F).

3. In hot weather, be adequately prepared to protect the concrete from the adverse influence of heat before the placement of any concrete. Take precautions to avoid cracking of the concrete from rapid drying during placement of concrete, particularly when the work is exposed to direct sunlight.

   a. Cool forms by fogging with water spray or by protecting them from the direct rays of the sun.

   b. If requested by the Contractor, deemed advisable by the Testing Engineer, and approved by the Project Manager, a retardant may be used to delay the initial set of the mix.

3.10 CONCRETE JOINTS

A. Construction joints shall be located so as to least impair the strength and water tightness of the structure. All construction joint locations shall be subject to the notification of and acceptance by the Project Manager, prior to placement.

B. All construction placement joints shall be keyed.

C. Reinforcement shall be continuous through construction joints and additional reinforcing placed as required. Except where otherwise specified, the surfaces of construction joints shall be prepared in a manner that will ensure bonding with concrete or grout placed on them. Wherever practical, construction joint surfaces shall be kept continuously moist until new concrete or grout is placed.

D. Use bonding agent on existing concrete surfaces to be joined with new concrete. Use a epoxy bonding adhesive at locations where fresh concrete is placed against hardened or partially hardened concrete surfaces.

E. Place control joints perpendicular to main reinforcement. Continue reinforcement across control joints except as indicated otherwise.

F. Locate joints for beams, slabs, joists and girders in the middle third of spans. Offset joints in girder a minimum distance of twice the beam width from a beam-girder intersection. Locate horizontal joints in walls and columns at underside of floors, slabs, beams and girders and at the top of footings or floor slabs. Locate joints beside piers integral with walls, near corners, and in concealed locations where possible.

3.11 REMOVAL OF FORMS

A. Formwork not supporting the weight of concrete, such as sides of beams, walls, and similar parts of the work, may be removed 48 hours after placing the concrete, provided the concrete is sufficiently hard to not be damaged by the form removal operations, and provided that curing and protection operations are maintained.

B. Removal of forms shall be in a manner to ensure safety of structure and prevent damage to concrete surfaces. Care shall be taken in the removal of forms for concrete surfaces to remain exposed.

C. Whenever the formwork is removed during the curing period, the exposed concrete shall be cured by one of the methods specified.

D. Formwork for beams, joist, slabs and other structural elements that support weight of concrete in place shall be left in place until the concrete has achieved at least 70 percent of its 28 day design compressive strength, as determined by testing specimens in accordance with ACI 301. Remove forms only if shores have been arranged to permit removal of forms without loosening or disturbing shores.

3.12 PLACING SLABS

A. Slabs-on-grade shall be thicknesses indicated on the Drawings, placed on compacted fill as specified. Concrete shall be full thickness of slab and troweled out as specified herein. Carefully review the Drawings in order to coordinate and provide all slab recesses, depressions, and pitches required for equipment or finishes to be furnished and installed by other trades, or for proper drainage. Install pre-molded joint filler strips at slab perimeters as indicated on the Drawings.

B. Thicken and reinforce slabs-on-grade under non-bearing masonry partitions.

C. Provide a continuous slab vapor retarder under all slabs-on-grade unless specifically noted otherwise. Place, protect and repair vapor retarder sheets according to ASTM EI643 and manufacture's written instructions. Lap seams a minimum of twelve (12") inches and tape. Cover vapor retarder with granular material, moisten and compact. See SECTION 02300: EARTHWORK. Minimize traffic over uncovered vapor retarders to limit damage. Any damage to vapor retarders shall be repaired prior to fill placement above vapor retarders or concrete placement. Where slab vapor retarder is not required at slabs-on-grade, gravel or crushed stone shall be wetted just prior to concrete placement.

D. Concrete slabs shall have wood or metal screeds spaced not over 10' o.c. and set at the elevations shown on the Drawings. NOTE: Contractor may, at his option, use wet screeds provided that wet pads are established at not more than 10' o.c. both ways, with elevations established by use of laser equipment.

E. Deposit and consolidate concrete for slabs in a continuous operation, within limits of construction joints, until completing placement of a panel or section. Concrete shall be thoroughly worked around reinforcements and other embedded items and into corners.

F. Bring slab surfaces to correct level with a straight edge and strike off. Use bull floats or darbies to smooth surface free of humps or hollows. This shall be completed before free moisture rises to the surface so as to avoid bleeding. Do not disturb slab surfaces prior to beginning finishing operations.

G. Adjust concrete volume for L/360 dead load ponding at suspended slabs.

H. Maintain reinforcing in proper position on chairs during concrete placements.

3.13 FINISHING FORMED NON-ARCHITECTURAL CONCRETE SURFACES

A. Rough-Formed Finish:
For concealed non-architectural finish on formed concrete with texture imparted by form material, repair tie holes and defective areas and chip off fins and projections exceeding 114 inch in height.

B. Smooth-Formed Finish:
For exposed non-architectural finish on select formed concrete and for concrete surfaces to receive a direct coating material such as waterproofing, damp proofing, veneer plaster, painting, etc. Immediately upon removal of forms, point all form tie holes and other defects flush with surface and remove all fins and projections exceeding 1/8" for a smooth surface, or as otherwise directed by the Project Manager.

C. Smooth-Rubbed Finish:
For exposed foundation surfaces and other smooth-formed surfaces as indicated on the Drawings, provide a smooth-rubbed finish not later than 1 day after form removal. Moisten concrete surfaces and rub with carborundum brick or other abrasive until producing a uniform color and texture. Remove all fins, burrs, joint marks, and other projections. Do not apply cement grout other than that created by the rubbing process.

D. Grout-Cleaned Finish:

For smooth-formed surfaces as indicated on the Drawings, wet concrete surfaces and apply grout of a consistency of thick paint to coat surfaces and fill small holes. Mix one part Portland cement to one and one-half parts fine sand with a 1:1 mixture of bonding admixture and water. Add white Portland cement in amounts determined by trial patches so color of dry grout will match adjacent surfaces. Scrub grout into voids and remove excess grout. When grout whitens, rub surface with clean burlap and keep surface damp by light water spray for at least 36 hours.

3.14 CONCRETE SLAB FINISHES

A. Scratch Finish:

1. Apply scratch finish to slab surfaces to receive concrete floor topping, mortar setting beds for tile, other bonded cementitious finish flooring materials and where indicated.

2. After placing slabs, plane surface to a levelness/flatness tolerance not exceeding ½ inch in 10 feet when tested with a 10 ft. straight edge. Slope surfaces uniformly to drains where required or as indicated. After leveling, roughen surface before final set with stiff brushes, brooms, or rakes.

B. Float Finish:

1. Apply float finish to slab surfaces to receive trowel finish, other finishes as specified, and slab surfaces to be covered with membrane or elastic waterproofing, membrane, or elastic roofing and where indicated.

2. After screeding, consolidating, and leveling concrete slabs, do not work surface until ready for floating. Begin floating, using float blades or flat shoes only, when surface water has disappeared, or when concrete has stiffened sufficiently to permit operation of power-driven floats, or both. Consolidate surface with power- driven floats or by hand-floating if area is small or inaccessible to power units. Check and level surface plane to a levelness/flatness tolerance not exceeding 1/4 inch in 10 ft. when tested with a 10' straight edge. Cut down high spots and fill low spots. Uniformly slope surfaces to drains. Immediately after leveling, re-float surface to a uniform, smooth, granular texture.

C. Trowel Finish:

1. Apply trowel finish to slab surfaces to be exposed to view and slab surfaces to be covered with resilient flooring, carpet, thin-set ceramic or quarry tile, paint, or other thin-film finish coating system.

2. After floating, begin first trowel finish operation using a power-driven trowel. Begin final troweling when surface produces a ringing sound as trowel is moved over surface. Consolidate concrete surface by final hand-troweling operation, free of trowel marks, uniform in texture and appearance. Level surface plane to a tolerance not exceeding 114 inch in 10 feet when tested with a 10' straight edge. Grind smooth any surface defects that would telegraph through applied floor covering system.

3. Where ceramic or quarry tile is to be installed with thin-set mortar, apply a trowel finish as specified, then immediately follow by slightly scarifying the surface with a fine broom as recommended by the tile manufacturer to ensure proper bonding of tile setting materials. Coordinate with the Work of SECTION 09300: CERAMIC TILE and SECTION 09330: QUARRY TILE, as applicable. Slope surfaces uniformly to drains where required or as indicated.

D. Slip-Resistant Broom Finish:

1. Apply a non-slip broom finish to exterior concrete platforms, sidewalks, pads, steps, ramps, and elsewhere as indicated on the Drawings.

2. Immediately after float finishing, slightly roughen concrete surface by brooming with a fiber-bristle broom perpendicular to main traffic route. Review final finish with Project Manager prior to application.

3. All joints and edges shall be tooled.

4. All surfaces shall be properly damp cured.

5. Slab sealer shall be applied to all exposed exterior concrete slab surfaces.

6. Surfaces shall receive sealer applied at rates and by the methods recommended by the manufacturer.

3.15 MISCELLANEOUS CONCRETE ITEMS

A. Filling In:
Fill in holes and openings left in concrete for passage of work by other trades, unless shown or directed, after work of other trades is in place. Mix, place and cure concrete as specified to blend with in-place construction. Provide other miscellaneous concrete filling shown or required to complete the Work.

B. Equipment Bases and Foundations:
Provide machine and equipment bases and foundations as shown on the Drawings. Set anchor bolts for machines and equipment to templates at correct elevations, complying with information provided by the equipment manufacturer.

3.16 CURING AND PROTECTION

A. Protect newly placed concrete against low and high temperature effects and against rapid loss of moisture. In hot, dry, and windy weather protect concrete from rapid moisture loss before and during finishing operations with evaporation-control materials. Apply according to manufacturer's instructions, after screeding and bull floating, but before power floating and troweling.

B. Start initial curing as soon as free water has disappeared from concrete surface after placing and finishing. Cure concrete by curing compound, by moist curing, by moisture-retaining cover curing, or by combining these methods. Moist curing shall include keeping concrete surfaces continuously wet by covering with water; using a continuous water-fog spray; or covering the concrete surface with continuously wetted burlap.

1. Curing Slabs, Toppings and Other Flat Surfaces: Within twenty-four (24) hours after final troweling, slab finish surfaces shall be covered to moist cure for at least seven days with burlap or curing paper. Curing paper shall be lapped 4" at edges and sealed with tape at least 3" inches wide. Paper shall be weighted to prevent displacement, and holes or tears shall be immediately repaired.

2. Curing Formed Surfaces: Moist cure with forms in place for the full seven day curing period. If the forms are removed prior to seven days, apply curing compound and cure in accordance with manufacturer's written instructions. Intermittent wetting and drying does not provide acceptable curing. Keep steel forms heated by the sun, and all wood forms in contact with the concrete, wet during the curing period.

C. Form Removal Not Supporting Weight of Concrete (footings, walls): May be removed after curing for 24 hours after placing concrete, provided concrete is sufficiently hard to not be damaged by form removal operations, and provide curing and protection operations are maintained.

D. Form Removal Supporting Weight of Concrete: (beams, suspended slabs, lintels and other structural elements) May <u>not</u> be removed in less than 14 days or until concrete has attained at least 75% of design minimum compressive strength at 28 days. Determine potential compressive strength of in-place concrete by testing field-cured specimens representative of concrete location or members.

E. Where shored, form facing material may be removed 4 days after placement only if shores and other vertical supports have been arranged to permit removal of form facing material without loosening or disturbing shores and supports.

F. Protection From Mechanical Injury: During the curing period, protect concrete from damaging mechanical disturbance, particularly load stresses and excessive vibration. Protect all finished concrete surfaces from damage caused by construction equipment, materials, or methods and running water. Do not overload self-supporting concrete structures. Foundation walls shall not be backfilled or driven over by vehicles during the curing period.

G. Concrete floor sealer shall be applied to all exposed interior concrete slab floors, unless otherwise scheduled. Floors shall be clean and free of marks and stains. Floors shall receive sealer applied at rates and by the methods recommended by the manufacturer.

H. Exterior concrete slab surfaces shall be sealed at rates and by the methods recommended by the manufacturer. Protect fresh concrete from pedestrian and vehicular traffic for at least seven (7) days after placement.

I. Seal all concrete wall-slab perimeters and all penetrations with joint sealant as specified.

3.17 CONCRETE SURFACE REPAIRS

A. Repairing Formed Surfaces:

1. Repair of formed architectural concrete surfaces is not allowed. Only repairing of formed non-architectural concrete surfaces is allowed. Remove and replace concrete that cannot be repaired and patched to Project Manager's approval. Repair and patch defective areas with cement mortar immediately after removing forms. Mix dry-pack mortar, consisting of one-part Portland cement to 2-l/2 parts fine aggregate passing a No. 16 mesh sieve, using only enough water as required for handling and placing.

2. Cut out honeycombs, rock pockets, voids over 1/4 inch in any dimension, and holes left by tie rods and bolts down to solid concrete but in no case to a depth less than 1 inch. Make edges of cuts perpendicular to the concrete surface. Thoroughly clean, dampen with water, and brush-coat the area to be patched with bonding agent. Place patching mortar before bonding agent has dried.

3. For surfaces exposed to view, blend white Portland cement and standard Portland cement so that when dry, patching mortar will match surrounding color. Provide test areas at inconspicuous locations to verify mixture and color match before proceeding with patching. Compact mortar in place and strike-off slightly higher than surrounding surface.

4. Remove and replace concrete having defective surface if defects cannot be repaired to the satisfaction of the Project Manager. Surface defects include color and texture irregularities, cracks, spalls, air bubbles, honeycomb, rock pockets, fins, other surface projections, stain, and other discolorations that cannot be removed by cleaning. Flush out form tie holes and fill with dry-pack mortar or pre-cast cement cone plugs secured in place with bonding agent.

5. Repair concealed formed surfaces containing defects that affect the concrete's durability. If defects cannot be repaired, remove and replace the concrete.

B. Repairing Slab Surfaces:

1. Test slab surfaces for smoothness and verify surface tolerances specified for each surface and finish. Correct low and high areas as specified. Test surface slopes to drain for trueness of slope and smoothness by using a template having the required slope.

2. Repair finished surfaces containing defects that affect the concrete's durability. Surface defects include crazing and cracks in excess of 0.01-inch-wide or that penetrate to the reinforcing or completely through non-reinforced sections regardless of width, spalling, pop-outs, honeycombs, rock pockets, and other objectionable conditions. Correct high areas in surfaces by grinding after concrete has cured at least 14 days.

3. Correct low areas in surfaces during or immediately after completing surface finishing operations by cutting out low areas and replacing with patching mortar. Finish repaired areas to blend into adjacent concrete. Proprietary cementitious underlayment compound may be used when acceptable to the Project Manager.

4. Repair defective areas, except random cracks and single holes not exceeding 1 inch in diameter, by cutting out and replacing with fresh concrete. Remove defective areas with clean, square cuts and expose reinforcing steel with at least 3/4 inch clearance all around. Dampen concrete surfaces in contact with patching concrete and apply bonding agent. Mix patching concrete of same material to provide the same type or class as original concrete. Place compact and finish to blend with adjacent finished concrete. Cure in same manner as adjacent concrete.

C. At concealed, non-architectural concrete, repair isolated random cracks and single holes 1 inch or less in diameter by dry-pack method. Groove top of cracks and cut out holes to sound concrete and remove dust, dirt, and loose particles. Dampen cleaned concrete surfaces and apply bonding agent. Place dry-pack before bonding agent has dried. Compact dry-pack mixture in place and finish to match adjacent concrete. Keep patched area continuously moist for at least 72 hours.

D. Perform structural repairs with prior approval of Project Manager for method and procedure, using specified epoxy adhesive and mortar. Repair methods not specified above may be used, subject to acceptance by Project Manager.

END OF SECTION

PART 1 - GENERAL

1.1 SUMMARY

A. Section Includes:

1. Cleaning of existing horizontal and vertical concrete surfaces.

2. Epoxy repair of cracks in existing horizontal and vertical concrete surfaces.

3. Cementitious and Epoxy patching of existing deteriorated horizontal and vertical concrete surfaces.

1.2 REFERENCES

A. American Association of State Highway and Transportation Officials (AASHTO) M−235 – Epoxy Resin Adhesives.

B. American Concrete Institute (ACI) 302.1 − Guide for Concrete Floor and Slab Construction.

C. American Society for Testing and Materials (ASTM):

1. C 78 − Test Method for Flexural Strength of Concrete (Using Simple Beam with Third−Point Loading).

2. C 109 − Test Method for Compressive Strength of Hydraulic Cement Mortars (Using 2−inch or 50−mm Cube Specimens).

3. C 266 − Test Method for Time of Setting of Hydraulic Cement Paste by Gillmore Needles.

4. C 348 − Test Method for Flexural Strength of Hydraulic Cement Mortars.

5. C 881 − Specification for Epoxy−Resin Base Bonding Systems for Concrete.

6. C 882 − Test Method for Bond−Strength of Epoxy−Resin Systems Used with Concrete.

7. C 883 − Test Method for Effective Shrinkage of Epoxy−Resin Systems Used with Concrete.

8. C 928 − Specifications for Packaged, Dry, Rapid−Hardening Cementitious Materials for Concrete Repairs.

9. C 944 − Standard Test Method for Abrasion Resistance of Concrete or Mortar Surfaces by the Rotary−Cutter Method.

10. C 1202 − Test Method for Electrical indication of Concrete's Ability to Resist Chloride Ion Penetration.

11. C 1042 − Test Method for Comparing Concrete on the Basis of Bond Developed with Reinforcing Steel.

12. C 1059 − Specification for Latex Agents for Bonding Fresh to Hardened Concrete.

13. D 570 − Test Method for Water Absorption of Plastics.

14. D 638 − Test Method for Tensile Properties of Plastics.

15. D 695 − Test Method for Compressive Properties of Rigid Plastics.

16. D 790 − Test Method for Flexural Properties of Unreinforced and Reinforced Plastics and Electrical Insulating Materials.

1.3 SUBMITTALS

A. Submit under provisions of Section 01330:

1. Product Data: Include manufacturer's specifications, surface preparation and application instructions, and protection of adjacent surfaces.

2. Test Data: Confirm compliance with specified requirements.

1.4 QUALITY ASSURANCE

A. Mockup:

1. Clean and repair existing concrete surfaces under provisions of Section 01430.

2. Size: 100 square feet of each substrate.

3. Location: Approved by Architect/Engineer.

1.5 DELIVERY, STORAGE AND HANDLING

A. Deliver, store, and handle products under provisions of Section 01600.

B. Store materials in a dry area within temperature range recommended by manufacturer.

1.6 PROJECT CONDITIONS

A. Apply materials within temperature range recommended by manufacturer.

B. Ensure adequate ventilation in application areas.

PART 2 -PRODUCTS

2.1 MANUFACTURERS

A. Dayton Superior Corporation, 402 South First Street, Oregon, IL 61061, (800) 745−3707. (DSC)

B. Euclid Chemical Co.

C. W.R. Grace Chemical Co.

D. Substitutions: As approved under provisions of Section 01630

2.2 MATERIALS − CLEANERS

A. Concrete and Ceramic Tile Floor Cleaner, Degreaser, and Stripper:

1. Product: Concrete Floor Cleaner and Degreaser (DSC J−47).

2. Description: Water soluble cleaning and degreasing solution.

2.3 MATERIALS − CEMENTITIOUS PATCHING COMPOUNDS

A. Non-Sag Patching Compound for Formed Vertical and Overhead Surfaces:

1. Products:

a. DSC HD−50.

b. "Verticoat Supreme" by The Euclid Chemical Company (or equal) one component, mircosilica and latex modified, non-sag repair mortar. Bonding strength of concrete to concrete after 28 days not less than 2,100 psi (ASTM C-882) and compressive strength of not less than 6,200 psi after 28 days (ASTM C109).

c. Approved Equal

2. Description: Fast setting, cement based, fiber reinforced, latex modified, heavy duty concrete patch for horizontal surfaces and vertical and overhead form−and−pour" applications.

3. Pourable and pumpable.

4. Meet ASTM C 928.

5. Compressive strength: Tested per ASTM C 109 with following results: Test Age Compressive Strength − psi (MPa) At 75 degrees F (24 degrees C)

a. 1 hour 2500 (17.2)−

b. 3 hours 3500 (24.1)

c. 1 day 6145 (42.4)

d. 7 days 7370 (50.8)

e. 28 days 7990 (55.1)

6. Bond strength: Tested per ASTM C 882 with following results: Test Age Bond Strength – psi (MPa)

   a. 1 day 1950 (13.4)

   b. 7 days 2550 (17.6)

7. Length change: Tested per ASTM C 928 with following results: Test Age Water Storage Air Storage Differential

   a. 28 days Plus 0.03 percent Minus 0.09 percent 0.12 percent

8. Chloride ion permeability: Tested per ASTM C 1202.

   a. Elapsed time: 360 minutes.

   b. Total charge passed through specimen: 646 coulombs. c. Chloride permeability rating: Very low.

B. Fiber Reinforced Patching Compound for Floor Surfaces:

1. Product: Day−Chem Perma Patch.

2. Description: Fast setting, cement based, fiber reinforced, silica fume, heavy duty concrete patch for horizontal surfaces.

3. Meet ASTM C 928.

4. Compressive strength: Tested per ASTM C 109 with following results: Test Age Compressive Strength − psi (MPa)

   a. 1 hour 2500 (17.2)

   b. 3 hours 4000 (27.6)

   c. 1 day 5200 (35.8)

   d. 7 days 9000 (62.0)

   e. 28 days 10,800 (74.5)

5. Length change: Tested per ASTM C 928 with following results: Test Age Water Storage Air Storage Differential 28 days Plus 0.03 percent Minus 0.07 percent 0.10 percent

C. Fast Set Concrete Patching Compound:

1. Product: Re−Crete 20 Minute Set with Ad Bond (DSC J−40).

2. Description: Cement based patching compound with accelerators.

3. Compressive strength: Tested per ASTM C 109 with following results: Test Age Compressive Strength − psi (MPa)

   a. 1 day 2250 (15.5)

   b. 3 days 5100 (35.2)

   c. 28 days 8000 (55.1)

D. Water Stop Patching Compound:

1. Product: Water Stop.

2. Description: Noncorrosive, non−rusting, hydraulic cement.

3. Compressive strength: Tested per ASTM C 109 with following results: Test Age Compressive Strength − psi (MPa)

   a. 1 hour 975 (6.7)

   b. 24 hours 1870 (12.9)

   c. 3 days 2950 (20.3)

   d. 7 days 3650 (25.1)

   e. 28 days 5910 (40.7)

4. Setting time: 2−1/2 minutes initial, 3−1/2 minutes final; tested per ASTM C 266. Include one of the following epoxy adhesives for patching, resurfacing, and anchoring.

2.4 MATERIALS − EPOXY ADHESIVES

A. Epoxy Adhesive for Bonding Fresh to Existing Concrete and Anti-Corrosion for Steel:

1. Products:

   a. Sure Level Epoxy (DSC J−57).

   b. "Duralprep AC" by The Euclid Chemical Company (http://euclidchemical.com/product_catalog.asp?top=288) or equal 3-part solvent free pre-proportioned, water based, epoxy-modified, cement bonding agent and anti-corrosion coating for steel reinforcement; used as a bonding agent for placing fresh concrete to existing concrete and for repair and restoration of concrete surfaces.

   c. Approved Equal.

2. Description: Two component, pre−proportioned, 100 percent solids, low modulus, high strength, low viscosity epoxy.

3. VOC compliant.

4. Tested to ASTM C 881, Type 3, Grade 1, Classes B and C.

5. Compressive strength: 7500 psi (51.7 MPa) in 24 hours, tested per ASTM D 579.

6. Bond strength: 1600 psi (11.0 MPa) at 14 days, tested per ASTM C 882.

7. Tensile strength: 2500 psi (17.2 MPa), tested per ASTM D 638.

B. Epoxy Adhesive for Anchors:

1. Product: Sure−Anchor I (DSC J−51).

2. Description: Two−component, pre−proportioned, 100 percent solids, fast setting, moisture insensitive epoxy adhesive.

3. Tested to ASTM C 881, Types 1, 2, 4, and 5, Grade 3, Classes B and C.

4. VOC compliant.

5. Compressive strength: 10,600 psi (73.0 MPa), tested per ASTM D 695 at 7 days.

6. Modulus of elasticity (compressive): 500,000 psi (3447 MPa), tested per ASTM D 695.

7. Water absorption: 0.9 percent, tested per ASTM D 570.

8. Concrete pullout resistance: Rod Diameter − Inches (mm) Hole Diameter − Inches (mm) Hole Depth − Inches (mm) Ultimate Pullout Strength based on Concrete Compressive Strength − pounds (kg)

   a. 3500 (24) 4000 (27) 4500 (31)

   b. 3/8 (10) 7/16 (11) 4 (102) 7100 (3216) 7150 (3238) 7190 (3257)

   c. 3/8 (10) 7/16 (11) 5.5 (140) 8500 (3850) 8600 (3896) 8690 (3936)

   d. 1/2 (13) 9/16 (14) 5 (127) 14,200 (6432) 14,400 (6523) 14,600 (6613)

   e. 1/2 (13) 9/16 (14) 6.5 (165) 17,600 (7972) 17,800 (8063) 18,000 (8154)

   f. 5/8 (16) 3/4 (19) 6 (152) 21,500 (9739) 21,700 (9830) 21,900 (9920)

   g. 5/8 (16) 3/4 (19) 7.75 (197) 25,400 (11,506) 25,800 (11,687) 26,200 (11,868)

   h. 3/4 (19) 7/8 (22) 7 (178) 28,600 (12,955) 28,800 (13,046) 29,200 (13,227)

i. 3/4 (19) 7/8 (22) 9.5 (240) 34,600 (15,673) 34,800 (15,764) 35,200 (15,945)

2.5 MATERIALS − BONDING AGENTS

A. Epoxy Adhesive Bonding Agent Concrete to Concrete:

1. Product: Resi−Bond (DSC J−58).

2. Description: Two component, pre−proportioned, 100 percent solids, high modulus, medium viscosity epoxy adhesive.

3. VOC compliant.

4. Tested to ASTM C 881, Types 1, 2, 4, and 5, Grade 2, Classes B and C and AASHTO M−235, Class III − Standard Version.

5. Compressive strength: Minimum 10,400 psi (71.7 MPa) in 7 days, tested per ASTM D 695.

6. Concrete bond strength: 2550 psi (17.6 MPa) at 2 days and 3150 psi (21.7 MPa) at 14 days, tested per ASTM C 882.

7. Tensile strength: 7580 psi (52.3 MPa) at 7 days, tested per ASTM D 638.

8. Water absorption: 0.13 percent, tested per ASTM D 570.

9. Modulus of elasticity: 275,000 psi (1896 MPa), tested per ASTM D 695.

B. Latex Adhesive Bonding Agent Concrete to Concrete:

1. Product: Day−Chem Ad Bond (DSC J−40).

2. Description: Non−reemulsifiable, acrylic latex emulsion bonding agent.

3. Tested to ASTM C 1059, Type II.

4. Bond strength: Tested per ASTM C 1042, Type II with following results: Test Age Compressive Strength − psi (MPa)

a. 14 days 1865 (12.9)

b. 28 days 2436 (16.8)

C. Interior Bonding Agent:

1. Product: Superior Concrete Bonder (DSC J−41). Do not use this product in exterior applications.

2. Description: Re-emulsifiable/re-wettable, polyvinyl acetate emulsion bonding agent.

2.6 SEALANTS

A. High-performance, low-modulus 1-part polyurethane, non-sag elastomeric sealant. ASTM C-920, Type S, Grade NS, Class 25 non-sag. Sikaflex – 15LM as manufactured by Sika Restoration Systems or approved equal.

2.7 MOISTURE RETAINING COVER

A. ASTM C 171, polyethylene film or white burlap-polyethylene sheet.

B. Euclid Chemicals high solids water based curing compound.

C. W.R. Grace "Cure and Seal"

2.8 ACCESSORIES

A. Sand: Clean, well graded silica sand.

B. Aggregate: 3/8 inch (10 mm) clean, washed pea gravel.

2.9 MIXING

A. Mix materials in accordance with manufacturer's instructions. Include the following for epoxy patching compounds.

B. Epoxy Patching Compound: Add sand to mixed epoxy adhesive in accordance with manufacturer's instructions.

C. Cementitious Patching Compound: Mix aggregate with patching compound at rate not to exceed manufacturer's recommended ratio.

D. Do not over–water or retemper mixes.

PART 3 - EXECUTION

3.1 PREPARATION

A. Clean surfaces to be patched or bonded:

1. Remove loose and foreign matter by sandblasting, chipping, wire brushing, or grinding.

2. Remove deteriorated and loose concrete to expose firm substrate.

3. Clean holes with bristle brush.

4. Remove remaining water and dust with clean, compressed air.

5. All oils, greases, dirt, old coatings or chemical contaminates must be removed. All steel surfaces should be blasted to a "Near White" metal finish using clean dry blasting media.

B. Protect adjacent and underlying surfaces.

3.2 APPLICATION − EPOXY REINFORCING SPRAY

A. Follow manufacturer's instructions.

B. Apply to exposed reinforcing steel in several light, even coats.

3.3 APPLICATION − BONDING AGENTS

A. Follow manufacturer's instructions.

B. Apply by brush, broom, or roller.

C. Place patching compounds within time period recommended by manufacturer or recoat.

3.4 APPLICATION − INTERIOR EPOXY MORTAR FOR PATCHING OR OVERLAY

A. Follow manufacturer's instructions.

B. Prime prepared substrate with mixed neat epoxy adhesive.

C. Apply epoxy mortar before primer becomes tack free.

D. Place in maximum 1-inch (25 mm) lifts. Allow each lift to cure before placing next lift.

E. Minimum thickness: 1/4 inch (6 mm).

F. Levels of Repair:

1. Level 1 repair consists of minor surface concrete crack and loose material removal and patch repair.

2. Level 2 repair consists of medium depth concrete repair, removal of loose and damaged materials but no exposed rebar materials.

3. Level 3 repair consists of severe concrete repair. Missing and damaged concrete surfaces may require rebuilding. Exposed rebar is common.

3.5 APPLICATION − EXTERIOR EPOXY MORTAR PATCHING OR OVERLAY

A. Follow manufacturer's instructions.

B. Prime prepared substrate with mixed neat epoxy adhesive.

C. Apply epoxy mortar before primer becomes tack free.

D. Thickness: 1/4-inch (6 mm) minimum to 1/2-inch (13 mm) maximum. Do not use the following for exterior slabs−on−grade.

E. Levels of Repair:

1. Level 1 repair consists of minor surface concrete crack and loose material removal and patch repair.

2. Level 2 repair consists of medium depth concrete repair, removal of loose and damaged materials but no exposed rebar materials.

3. Level 3 repair consists of severe concrete repair. Missing and damaged concrete surfaces may require rebuilding. Exposed rebar is common.

3.6 APPLICATION − EPOXY CRACK REPAIR

A. Follow manufacturer's instructions.

B. Replace loose, missing or torn joint sealant with specified sealant. Prime and install the sealant in accordance with sealant manufacturer's instructions. For all concrete cracks greater than 1/16" in width; V-groove out the joint to a minimum ¼" width and install a urethane sealant.

C. Space injection holes at 8 to 36-inch (200 to 900 mm) intervals depending on crack width and thickness of member.

D. Set injection ports in epoxy adhesive and allow to cure.

E. Seal cracks with epoxy adhesive to prevent loss of injected epoxy.

F. Inject epoxy to refusal.

G. After curing, remove injection ports and grind surfaces smooth.

3.7 PATCHING VERTICAL AND OVERHEAD SURFACES − CEMENTITIOUS COMPOUNDS

A. Follow manufacturer's instructions.

B. Wet surfaces or apply bonding agent.

C. Thoroughly work material into substrate without voids.

D. Float or trowel smooth and flush with adjacent surfaces.

E. Finish to match texture of surrounding concrete.

F. Cure surfaces immediately after finishing to prevent moisture loss; apply curing compound. Protect concrete from excessive hot temperatures. Comply with recommendations in ACI 305R for hot-weather protection during curing.

1. Curing compound is required. Cure with Euclid Chemicals high solids, water based curing compound or equal. Under hot, dry, direct sunlight or windy conditions apply a second coat of curing compound after the first has dried.

2. Begin curing after finishing concrete but not before free water has disappeared from concrete surface.

3.8 DEFECTIVE CONCRETE:

A. Repair and patch defective areas when approved by Owner's Representative. Remove and replace patch to Owner's Representative's approval.

END OF SECTION

PART 1 - GENERAL

1.1 RELATED DOCUMENTS

A. Drawings and general provisions of the Contract, including General and Supplementary Conditions and Division I Specification Sections, apply to this Section.

1.2 SUMMARY

A. This Section includes the following:

1. Exterior non-load-bearing curtainwall framing.

2. Ceiling joist framing.

3. Gypsum sheathing and air-infiltration barriers.

1.3 DEFINITIONS

A. Minimum Uncoated Steel Thickness:
Minimum uncoated thickness of cold-formed framing delivered to the Project site shall be not less than 95 percent of the thickness used in the cold-formed framing design. Lesser thicknesses shall be permitted at bends due to cold forming.

B. Producer:
Entity that produces steel sheet coil fabricated into cold-formed members.

1.4 SUBMITTALS

A. Product Data:
For each type of cold-formed metal framing product and accessory indicated.

B. Shop Drawings:
Show layout, spacing, sizes, thicknesses, and types of cold-formed metal framing; fabrication; and fastening and anchorage details, including mechanical fasteners. Show reinforcing channels, opening framing, supplemental framing, strapping, bracing, bridging, splices, accessories, connection details, and attachment to adjoining Work.

4. For cold-formed metal framing indicated to comply with design loads, include structural analysis data signed and sealed by the qualified professional engineer responsible for their preparation.

C. Mill certificates signed by steel sheet producer or test reports from a qualified independent testing agency indicating steel sheet complies with requirements.

D. Welding Certificates:
Copies of certificates for welding procedures and personnel.

E. Qualification Data:

For firms and persons specified in "Quality Assurance" Article to demonstrate their capabilities and experience. Include lists of completed projects with project names and addresses, names and addresses of Project Managers and owners, and other information specified.

F. Product Test Reports:
From a qualified testing agency indicating that each of the following complies with requirements, based on comprehensive testing of current products:

1. Expansion anchors.

2. Power-actuated anchors.

3. Mechanical fasteners.

4. Vertical deflection clips.

5. Miscellaneous structural clips and accessories.

G. Research/Evaluation Reports:
Evidence of cold-formed metal framing's compliance with building code in effect for Project, from a model code organization acceptable to authorities having jurisdiction.

1.5 QUALITY ASSURANCE

A. Installer Qualifications:
An experienced installer who has completed cold formed metal framing similar in material, design, and extent to that indicated for this Project and whose work has resulted in construction with a record of successful in service performance.

B. Engineering Responsibility:
Engage a qualified professional engineer to prepare design calculations, Shop Drawings, and other structural data.

C. Professional Engineer Qualifications:
A professional engineer who is legally qualified to practice in the Virgin Islands and who is experienced in providing engineering services of the kind indicated. Engineering services are defined as those performed for installations of cold-formed metal framing that are similar to those indicated for this Project in material, design, and extent.

D. Mill certificates signed by steel sheet producer or test reports from a qualified independent testing agency indicating steel sheet complies with requirements, including uncoated steel thickness, yield strength, tensile strength, total elongation, chemical requirements, ductility, and galvanized-coating thickness.

E. Testing Agency Qualifications:
An independent testing agency, acceptable to authorities having jurisdiction, qualified according to ASTM E 329 to conduct the testing indicated, as documented according to ASTM E 548.

F. Welding:

Qualify procedures and personnel according to AWS D 1.1, "Structural Welding Code--Steel," and AWS Dl.3, "Structural Welding Code--Sheet Steel."

G. Fire-Test-Response Characteristics:
Where metal framing is part of a fire resistance rated assembly, provide framing identical to that of assemblies tested for fire resistance per ASTM E 119 by a testing and inspecting agency acceptable to authorities having jurisdiction.

1. Fire-Resistance Ratings:
Indicated by GA File Numbers in GA-600, “Fire Resistance Design Manual," or by design designations from UL’s "Fire Resistance Directory” or from the listings of another testing and inspecting agency.

H. AISI Specifications:
Comply with AISI's "Specification for the Design of Cold Formed Steel Structural Members" or "Load and Resistance Factor Design Specification for Cold Formed Steel Structural Members" and the following for calculating structural characteristics of cold formed metal framing:

1. CCFSS Technical Bulletin:
"AISI Specification Provisions for Screw Connections."

I. Pre-installation Conference:
Conduct conference at Project site to comply with requirements in Division 1 Section "Project Meetings."

J. Engineering Criteria:
The maximum allowable deflection (due to wind load) of framing supporting masonry veneer walls shall be L/720. The maximum allowable lateral deflection of general interior partition framing shall be L/240. Engineering of interior metal stud systems shall accommodate a lateral load of 5 psf.

1.6 DELIVERY, STORAGE, AND HANDLING

A. Protect cold-formed metal framing from corrosion, deformation, and other damage during delivery, storage, and handling.

B. Store cold-formed metal framing protect with a waterproof covering, and ventilate to avoid condensation.

PART 2 - PRODUCTS

2.1 MANUFACTURERS

A. Available Manufacturers:
Subject to compliance with requirements, manufacturers offering cold-formed metal framing that may be incorporated into the Work include, but are not limited to, the following:

B. Manufacturers:

Subject to compliance with requirements, provide cold-formed metal framing by one of the following:

1. Clark Steel Framing Industries.
2. Consolidated Systems, Inc.
3. Dale Industries, Inc.
4. Dietrich Industries, Inc.
5. MarinoWare; Div. of Ware Industries, Inc.
6. Steel Construction Systems.
7. Super Stud Building Products, Inc.
8. Unimast, Inc.
9. Hexaport International Ltd.

2.2 MATERIALS

A. Steel Sheet: ASTM A 653/A 653M, structural steel, zinc coated, of grade and coating as follows:

1. Grade: 50 (340), Class 1 or 2 50 (340), Class 3.
2. Coating: G60 (ZI80) G90 (Z275).

2.3 NON-LOAD-BEARING CURTAIN-WALL FRAMING

A. Steel Studs:
Manufacturer's standard C-shaped steel studs, of web depths indicated, punched, with stiffened flanges, complying with ASTM C 955, and as follows:

1. Minimum Uncoated-Steel Thickness: 0.0538 inch (1.37 mm).
2. Flange Width: 1-5/8 inches (41 mm).

B. Steel Track:
Manufacturer's standard U-shaped steel track, of web depths indicated, not punched, with unstiffened flanges, complying with ASTM C 955, and as follows:

1. Minimum Uncoated Steel Thickness: 0.0538-inch (1.37 mm) Matching steel studs.
2. Flange Width: 1 -1/4 inches (32 mm).

C. Single Deflection Track:
Manufacturer's single, deep-leg, U-shaped steel track; not punched, with unstiffened flanges, of web depth to contain studs while allowing free vertical movement, with flanges designed to support horizontal and lateral loads, and as follows:

1. Minimum Uncoated-Steel Thickness: 0.0538 inch (1.37 mm).

2. Flange Width: 2 1/2 (65 mm)1/2 inch.

D. Double Deflection Tracks:
Manufacturer's double, deep-leg, U-shaped steel tracks, consisting of nested inner and outer tracks; not punched, with unstiffened flanges.

1. Outer Track:
Of web depth to allow free vertical movement of inner track, with flanges designed to support horizontal and lateral loads, and as follows:

a. Minimum Uncoated-Steel Thickness: 0.0538 inch (1 .37 mm).

b. Flange Width: 2 inches (50 mm)

2. Inner Track:
Of web depth indicated, and as follows:

a. Minimum Uncoated-Steel Thickness: 0.0538 inch (1.37 mm).

b. Flange Width: 3-1/2 inches is typical.

E. Vertical Deflection Clips:
Manufacturer's standard bypass clips, capable of accommodating upward and downward vertical displacement of primary structure.

2.4 CEILING JOIST FRAMING

A. Steel Ceiling Joists:
Manufacturer's standard C-shaped steel sections, of web depths indicated, not punched, with stiffened flanges, complying with ASTM C 955, and as follows:

1. Minimum Uncoated-Steel Thickness: 0.0538 inch (1.37 mm).

2. Flange Width: 1-5/8 inches (41 mm), minimum.

2.5 FRAMING ACCESSORIES

A. Fabricate steel-framing accessories of the same material and finish used for framing members, with a minimum yield strength of 33,000 psi (230 MPa).

B. Provide accessories of manufacturer’s standard thickness and configuration, unless otherwise indicated, as follows:

1. Supplementary framing.

2. Bracing, bridging, and solid blocking.

3. Web stiffeners.

4. End clips.

5. Foundation clips.

6. Gusset plates.

7. Stud kickers, knee braces, and girts.

8. Joist hangers and end closures.

9. Hole reinforcing plates.

10. Backer plates.

2.6 ANCHORS, CLIPS, AND FASTENERS

A. Steel Shapes and Clips: ASTM A 240/A 666, Stainless Steel Type 316

B. Anchor Bolts:
ASTM A 240/A 666, Stainless Steel Type 316, threaded carbon-steel hex-headed bolts and carbon-steel nuts; and flat, hardened-steel washers.

C. Expansion Anchors:
Fabricated from corrosion-resistant materials, with capability to sustain, without failure, a load equal to 5 times design load, as determined by testing per ASTM E 488 conducted by a qualified independent testing agency.

D. Power-Actuated Anchors:
Fastener system of type suitable for application indicated, fabricated from corrosion resistant materials, with capability to sustain, without failure, a load equal to 10 times design load, as determined by testing per ASTM E 1190 conducted by a qualified independent testing agency.

E. Mechanical Fasteners: Corrosion resistant-coated, self-drilling, self-threading steel drill screws.

1. Head Type: Low-profile head beneath sheathing, manufacturer's standard elsewhere.

F. Welding Electrodes: Comply with AWS standards.

2.7 MISCELLANEOUS MATERIALS

A. Galvanizing Repair Paint: SSPC-Paint 20 or DOD-P-21035 ASTM A 780.

B. Nonmetallic, Non-shrink Grout:
Premixed, nonmetallic, noncorrosive, non-staining grout containing selected silica sands, Portland cement, shrinkage-compensating agents, and plasticizing and water-reducing agents, complying with ASTM C 1107, with fluid consistency and 30-minute working time.

C. Thermal Insulation:
ASTM C 665, Type I, un-faced mineral-fiber blankets produced by combining glass or slag fibers with thermosetting resins.

2.8 GYPSUM SHEATHING

A. Glass-Mat Gypsum Sheathing Board: ASTM C 1177/C 1177M.

1. Type and Thickness: Type X, 5/8 inch (15.9 mm) thick.

2. Size: 48 by 96 inches (1219 mm by 2438 mm).

3. Available Product:
Subject to compliance with requirements, a product that may be incorporated into the Work includes, but is not limited to, "Dens-Glass Gold" by Georgia-Pacific Corp.

2.9 SHEATHING ACCESSORIES

A. Air-Infiltration Barrier:
Asphalt-saturated organic felt, ASTM D 226, Type 1 (No. 15 asphalt felt), unperforated for use where cavity wall rigid insulation not installed with brick veneer or where EIFS systems not employed.

B. Fasteners:
Steel drill screws, ASTM C 954, in length recommended by sheathing manufacturer for thickness of sheathing board to be attached, with organic polymer or other corrosion-protective coating having a salt-spray resistance of more than 800 hours according to ASTM B 117.

2.10 FABRICATION

A. Fabricate cold-formed metal framing and accessories plumb, square, and true to line, and with connections securely fastened, according to manufacturer's written recommendations and requirements in this Section.

1. Fabricate framing assemblies using jigs or templates.

2. Cut framing members by sawing or shearing; do not torch cut.

3. Fasten cold-formed metal framing members by welding or screw fastening, as standard with fabricator. Wire tying of framing members is not permitted.

dddd. Comply with AWS Dl.3 requirements and procedures for welding, appearance and quality of welds, and methods used in correcting welding work.

eeee. Locate mechanical fasteners and install according to Shop Drawings, with screw penetrating joined members by not less than three exposed screw threads.

4. Fasten other materials to cold -formed metal framing by welding, bolting, or screw fastening, according to Shop Drawings.

B. Reinforce, stiffen, and brace framing assemblies to withstand handling, delivery, and erection stresses. Lift fabricated assemblies to prevent damage or permanent distortion.

C. Fabrication Tolerances:
Fabricate assemblies level, plumb, and true to line to a maximum allowable tolerance variation of 1/8 inch in 10 feet (1:960) and as follows:

1. Spacing:
   Space individual framing members no more than plus or minus 1/8 inch (3 mm) from plan location. Cumulative error shall not exceed minimum fastening requirements of sheathing or other finishing materials.

2. Squareness:
   Fabricate each cold-formed metal framing assembly to a maximum out-of-square tolerance of 1/8 inch (3 mm).

PART 3 - EXECUTION

3.1 EXAMINATION

A. Examine supporting substrates and abutting structural framing for compliance with requirements for installation tolerances and other conditions affecting performance. Proceed with installation only after unsatisfactory conditions have been corrected.

3.2 PREPARATION

A. Grout bearing surfaces uniform and level to ensure full contact of bearing flanges or track webs on supporting concrete or masonry construction.

3.3 INSTALLATION, GENERAL

A. Cold-formed metal framing may be shop or field fabricated for installation, or it may be field assembled.

B. Install cold-formed metal framing according to ASTM C 1007, unless more stringent requirements are indicated.

C. Install shop or field fabricated, cold-formed framing and securely anchor to supporting structure.

   1. Bolt or weld wall panels at horizontal and vertical junctures to produce flush, even, true-to-line joints with maximum variation in plane and true position between fabricated panels not exceeding 1/16 inch (1.6 mm).

D. Install cold-formed metal framing and accessories plumb, square, and true to line, and with connections securely fastened, according to manufacturer's written recommendations and requirements in this Section.

   1. Cut framing members by sawing or shearing; do not torch cut.

   2. Fasten cold-formed metal framing members by welding or screw fastening, as standard with fabricator. Wire tying of framing members is not permitted.

      a. Comply with AWS D1.3 requirements and procedures for welding, appearance and quality of welds, and methods used in correcting welding work.

      b. Locate mechanical fasteners and install according to Shop Drawings, with screw penetrating joined members by not less than three exposed screw threads.

E. Install framing members in one-piece lengths, unless splice connections are indicated for track or tension members.

F. Install temporary bracing and supports to secure framing and support loads comparable in intensity to those for which structure was designed. Maintain braces and supports in place, undisturbed, until entire integrated supporting structure has been completed and permanent connections to framing are secured.

G. Do not bridge building expansion and control joints with cold-formed metal framing. Independently frame both sides of joints.

H. Install insulation in built-up exterior framing members, such as headers, sills, boxed joists, and multiple studs at openings, that are inaccessible on completion of framing work.

I. Fasten hole reinforcing plate over web penetrations that exceed size of manufacturer's standard punched openings.

J. Erection Tolerances:
Install cold-formed metal framing level, plumb, and true to line to a maximum allowable tolerance variation of 1/8 inch in 10 feet (1:960) and as follows:

1. Space individual framing members no more than plus or minus 1/8 inch (3 mm) from plan location. Cumulative error shall not exceed minimum fastening requirements of sheathing or other finishing materials.

3.4 NON-LOAD-BEARING CURTAIN-WALL INSTALLATION

A. Install continuous tracks sized to match studs. Align tracks accurately and securely anchor to supporting structure as indicated.

B. Fasten both flanges of studs to top and bottom track, unless otherwise indicated. Space studs as follows:

1. Stud Spacing: 16 inches (406 mm).

C. Set studs plumb, except as needed for diagonal bracing or required for not plumb walls or warped surfaces and similar requirements.

D. Isolate non-load-bearing steel framing from building structure to prevent transfer of vertical loads while providing lateral support.

1. Install single deep-leg deflection tracks and anchor to building structure.

2. Install double deep-leg deflection tracks and anchor outer track to building structure.

3. Connect vertical deflection clips to bypassing infill studs and anchor to primary building structure.

E. Install horizontal bridging in curtain-wall studs, spaced in rows indicated on Shop Drawings but not more than 54 inches (1370 mm) apart. Fasten at each stud intersection.

1. Top Bridging for Single Deflection Track:
   Install row of horizontal bridging within 12 inches (300 mm) of single deflection track. Install a combination of flat, taut, steel sheet straps of width and thickness indicated and stud or stud-track solid blocking of width and thickness matching studs. Fasten flat straps to stud flanges and secure solid blocking to stud webs or flanges.

   a. Install solid blocking at centers indicated.

2. Bridging: Cold-rolled steel channel, welded or mechanically fastened to webs of punched studs.

3. Bridging:
   Combination of flat, taut, steel sheet straps of width and thickness indicated and stud-track solid blocking of width and thickness to match studs. Fasten flat straps to stud flanges and secure solid blocking to stud webs or flanges.

F. Install miscellaneous framing and connections, including stud kickers, web stiffeners, clip angles, continuous angles, anchors, fasteners, and stud girts, to provide a complete and stable curtain wall framing system.

3.5 GYPSUM SHEATHING INSTALLATION

A. General: Install gypsum sheathing to comply with GA-253 and manufacturer's written instructions.

B. Cut boards at penetrations, edges, and other obstructions of the work; fit tightly against abutting construction, except provide a 3/8-inch (9-mm) setback where non-load-bearing construction abuts structural elements.

C. Coordinate sheathing installation with flashing and joint sealant installation so these materials are installed in the sequence and manner that prevent exterior moisture from passing through completed exterior wall assembly.

D. Apply fasteners so screw heads bear tightly against face of sheathing boards but do not cut into facing.

E. Do not bridge building expansion joints with sheathing; cut and space edges to match spacing of structural support elements.

F. Vertical Installation:
   Install 48-inch (1219-mm) 1200-mm wide gypsum sheathing boards vertically with vertical edges centered over flanges of steel studs. Abut ends and edges of each board with those of adjacent boards. Screw-attach boards at perimeter and within field of board to each steel stud at approximately 8 inches (200 mm) O.C. and set back a minimum of 3/8 inch (9 mm) from edges and ends of boards.

G. Air-Infiltration Barrier Application:
   Cover sheathing with air-infiltration barrier as follows:

   1. Cut back air-infiltration barrier l/2 inch (13 mm) on each side of break in supporting members at expansion- or control-joint locations.

2. Apply asphalt-saturated organic felt horizontally with 2-inch (50-mm) overlap and 6-inch (150-mm) end lap; fasten to sheathing with corrosion-resistant staples.

3.6 FIELD QUALITY CONTROL

A. Testing:
   Owner will engage a qualified independent testing agency to perform field quality-control testing.

B. Field and shop welds will be subject to inspection and testing.

C. Testing agency will report test results promptly and in writing to Contractor and Project Manager.

D. Remove and replace Work that does not comply with specified requirements.

E. Additional testing and inspecting, at Contractor's expense, will be performed to determine compliance of corrected Work with specified requirements

3.7 REPAIRS AND PROTECTION

A. Galvanizing Repairs:
   Prepare and repair damaged galvanized coatings on fabricated and installed cold-formed metal framing with galvanized repair paint according to ASTM A 780 and manufacturer's written instructions.

B. Touchup Painting:
   Wire brush, clean, and paint scarred areas, welds, and rust spots on fabricated and installed prime-painted, cold-formed metal framing. Paint framing surfaces with same type of shop paint used on adjacent surfaces.

C. Protect paper-surfaced gypsum sheathing that will be exposed to weather for more than 30 days by covering exposed exterior surface of sheathing with a securely fastened air-infiltration barrier. Apply covering immediately after sheathing is installed.

D. Protect cutouts, corners, and joints in sheathing by filling with a flexible sealant or by applying tape recommended by sheathing manufacturer at time sheathing is applied.

E. Provide final protection and maintain conditions, in a manner acceptable to manufacturer and Installer that ensure cold-formed metal framing is without damage or deterioration at time of Substantial Completion.

END OF SECTION

PART 1 - GENERAL

1.1 DESCRIPTION

A. Work included in this Section:

1. Provide all engineering, labor, materials, equipment, and services, etc., required to engineer, furnish, and install all miscellaneous metal work and related accessories as indicated on the Drawings, specified herein, or otherwise required for a complete and proper job.

2. The Work shall include, but shall not necessarily be limited to:

   a. Miscellaneous structural steel.

   b. Miscellaneous steel plates and angles.

   c. Miscellaneous steel brake metal, pans, closures, trim, and other configurations.

   d. Miscellaneous carpenter's iron as required.

   e. Miscellaneous frames, brackets, and supports for hardware, window systems, and equipment including all mechanical, electrical, medical, athletic, and theatrical equipment. Including seismic bracing for all miscellaneous metal frames, stands, and supports.

   f. Steel handrails and guardrails.

   g. Expansion joint covers.

   h. Expanded steel treads and landings.

   i. Abrasive nosing for concrete stairs.

   j. Support frames for benches and counters.

   k. Masonry wall top clips.

3. It shall be a requirement of the Work of this Section to thoroughly review all of the Contract Documents and provide any and all miscellaneous metal work required for a complete and proper job.

B. Related Work Specified Elsewhere:

1. SECTION 03300: CAST-IN-PLACE CONCRETE

2. SECTION 05100: STRUCTURAL STEEL

3. DIVISION 23: MECHANICAL

4. DIVISION 26: ELECTRICAL

1.2 SUBMITTALS

A. Product Data: Submit product data for manufactured products specified herein.

B. Shop Drawings:

1. Submit shop drawings for each item or assembly. Shop drawings shall accurately and clearly show in detail the construction, sizes, gauges, dimensions, methods of assembly, supports, finishes, and all other pertinent data and information.

ffff. Submit stair and railing shop drawings drawn at not less than 1/4" scale with components shown in related positions. Provide larger scale custom details, control details and dimensions not governed by job conditions. Show all required field measurements.

C. Certifications:

1. Submit manufacturer's certification that the stairs, platforms, and railings provided are in full compliance with the requirements of the Contract Documents and are totally suitable for the proposed installations when installed in accordance with the shop drawings.

2. Submit certificates indicating that each welder has satisfactorily passed AWS qualification tests for welding processes involved and if pertinent, has undergone re-certification.

3. Steel fabricator's in-plant special inspections program including: registration of special inspections program, written procedural and quality control manuals and evidence of periodic auditing of fabrication practices by an approved inspection agency.

1.3 PRODUCT HANDLING

A. Delivery of Materials: Deliver, store and handle components in such a manner as to prevent damage to finished surfaces.

B. Storage of Materials:
Store components in a dry, clean location, away from uncured masonry and concrete. Cover with tarpaulin or polyethylene sheeting.

1.4 QUALITY ASSURANCE

A. Welding Standards:
Comply with applicable provisions of ASW D1.1 "Structural Welding Code- Steel" and ASW D1.3 "Structural Welding Code Sheet Steel."

B. Stair and railing fabricator shall be a certified member of AISC who participates in a recognized quality assurance program and who is regularly inspected by an independent testing/inspection agency.

1. In the absence of the above requirements, the fabricator shall be required to hire and pay for an independent testing/inspection agency approved by the Owner, to monitor fabrication and perform random testing of all stairs and railing fabrication procedures.

2. The fabricator shall submit evidence to the Owner indicating satisfactory completion of projects of similar scope and that fabrication facilities are adequate to meet production requirements.

C. Fabricator's Qualifications:
Only fabricators that maintain an agreement with an approved independent inspection or quality control agency to conduct periodic in-plant inspections at the fabricator's plant, at a frequency that will assure the fabricator's conformance to the requirements of the inspection agency's approved quality control program will be approved for this project.

1.5 TESTING AND INSPECTIONS

A. General:
Stair and railing materials and fabrication procedures are subject to inspection and tests in mill, shop, and field, conducted by a qualified testing agency. Such inspections and tests shall not relieve the Contractor of responsibility for providing his own inspections, quality control and materials and fabrication procedures in compliance with specified requirements. Any non-compliant materials or fabricated components shall be removed and replaced.

B. The fabricator shall submit evidence of in-plant inspections in conformance with IBC "Structural Tests and Inspections- Inspection of Fabricators (1700).

C. Testing and inspection shall be formed as required by the building code, the Contract Documents or as otherwise directed by the Project Manager. The cost of field-testing and inspection shall be paid for by the Owner. If Work is found not to conform to the Contract Documents, the Contractor shall be responsible for the cost of all further testing.

D. The Contractor shall cooperate with and facilitate testing and inspection by the testing agency. The Contractor shall, at his own expense, furnish the testing agency stair and railing shop drawings.

E. Shop and field bolted connections and shop and field welded connections shall be inspected.

1.6 STRUCTURAL PERFORMANCE

F. Handrails:
Engineer, fabricate, and install handrails and guardrails to comply with requirements of ASTM E985. ASTM E894 and to withstand the following structural loads without exceeding the allowable design working stress of the materials involved including anchors and connections. Apply each load to produce the maximum stress in each of component.

1. Handrails shall be rigid, free of vibration and able to withstand a concentrated force of 200 pounds applied at any point in any direction and, but not simultaneously, a uniform load of 50 pounds per foot applied in any direction.

PART 2 - PRODUCTS ("GREEN")

2.1 GENERAL

A. Note:

It is the Owner's intent to use energy conserving, environmentally friendly materials to the greatest extent practical. The Contractor is therefore encouraged to use recycled steel products.

B. Miscellaneous metal items shall be standard approved products, fabricated in accordance with best shop practices and, wherever possible, shop assembled, ready for erection.

C. Metals shall be free from defects impairing strength, durability, or appearance and shall be best commercial quality for purposes specified. Metals shall be made with structural properties to safely sustain and withstand strains, stresses, to which they will be normally subjected.

D. Gauges herein specified are minimums and shall refer to U. S. Standard for sheet steel, plate iron, and steel.

2.2 MATERIALS

A. Steel Plates, Shapes and Bars: ASTM A-36.

B. Sheet Steel:
Cold-rolled: ASTM A-366
Hot-rolled: ASTM A-569

C. Steel Tubing:
Cold-formed: ASTM A-500
Hot-formed: ASTM A-501

D. Steel Pipe: ASTM A-53.

E. Fasteners:
Provide plated fasteners complying with ASTM A 240/A 666, Stainless Steel Type 316, for exterior use or where built into exterior walls. Select fasteners for the type, grade, and class required.

1. Bolts and Nuts:
ASTM A307, Grade A
ASTM A563.

2. Machine Screws: ANSI B18.6.3.

3. Lag Bolts: ANSI B18.2.1.

4. Plain Washers: Round, carbon steel, ANSI B18.22.1.

5. Lock Washers: Helical, spring type, carbon steel, ANSI B18.21.1.

6. Expansion Anchors: Carbon steel components zinc-plated to comply with ASTM B633.

F. Note:
The fabricator shall no stamp, stencil, or otherwise place his identification on any portion of miscellaneous metals intended to remain exposed to view.

2.3 PAINTING AND PROTECTIVE COATING

A. General:
All ferrous metal that is not stainless steel herein specified shall be properly cleaned and shop primed, except at the following locations:

1. Anchors that are built into masonry shall be coated with bituminous paint, unless specified to be galvanized.

2. Ferrous metal to be encased in concrete shall be left unpainted, unless specified or noted otherwise. Aluminum to be encased in concrete shall be coated with bituminous paint.

3. Where hot-dip galvanized metal is specified or shown, it shall not be shop primed.

4. Where metal is scheduled to receive ceramic tile finish it shall not be shop primed.

B. Surface Preparation:

1. Exterior steel shall meet requirements of the Steel Structures Painting Council, SS PC-SP6 Commercial Blast Cleaning Standard.

2. Interior steel and steel to be fireproofed shall meet requirements of SS PC-SP3 Power Tool Cleaning Standard.

C. Shop Primer for Ferrous Metal shall be Tnemec "37 H Chem Prime Universal Phenolic Primer," at 2.0- 3.0 mils DFT.

D. For items that are not stainless steel. Galvanizing Repair Paint shall be high zinc content paint Tnemec 90-97.

E. Bituminous Paint shall be cold-applied mastic complying with SSPC-Paint 12 except containing no asbestos fibers.

2.4 MASONRY WALL TOP CLIPS

A. Provide steel clip angles at both sides of the tops of masonry walls secured to building structure, coordinate with the Work of Section 05100: Structural Steel. In general, size, spacing, and attachment of wall clips shall be determined by whether the wall in non-structural (architectural) or is a structural element (fire wall, load- bearing wall or shear wall for example) and shall be as indicated on the Drawings. Wall clips specified herein or partition top anchors specified in Section 04200: Unit Masonry and Mortar shall be provided for all masonry walls unless specifically indicated otherwise.

2.5 MISCELLANEOUS FRAMING AND SUPPORTS

A. Provide steel framing and supports for applications indicated that are not a part of structural steel scope as required to complete the Work. Fabricate units to sizes, shapes, and profiles indicated and required to receive adjacent construction. Fabricate from steel shapes, plates, and steel bars of welded construction using mitered joints for field connections. Cut, drill, and tap units to receive hardware, hangers, and similar items. Equip units with integrally welded anchors for casting into concrete or building into masonry.

2.6 METAL CHANNEL FRAMING SYSTEMS (UNISTRUT)

A. Various building materials and equipment such as suspended lights and service columns shall be provided with concealed metal channel framing systems as required to permanently and safely anchor such items to suitable building primary structural components.

B. Metal channel framing systems shall be Unistrut Metal Framing as manufactured by UNISTRUT Corporation or approved equal. Framing shall be electrogalvanized steel. Systems shall be complete and shall be properly engineered, fabricated, and installed by the manufacturer or its authorized representative/installer. Installer shall have not less than five (5) years' experience.

C. The Work of Channel Framing systems shall include, but shall not necessarily be limited to:

1. Field inspection to verify job conditions, dimensions, and suitability of primary structure to receive channel framing.

2. Engineering of all channel framing, attachments between framing members, attachments between framing systems and building structure, and anchor points to receive attachments by the manufacturer of the building material or equivalent to be supported by the channel framing systems.

3. Coordination of framing load capacity and anchor point types and locations with the requirements of the related material or equipment manufacturer.

4. Submission of structural calculations including, but not limited to design criteria, stress and deflection analysis and selected framing, fittings and anchors prepared by a professional structural engineer licensed in the United States of America or the United States Virgin Islands.

5. Submission of shop drawings.

PART 3 - EXECUTION

3.1 VERIFYING CONDITIONS

A. Coordinate all work with the work of other trades. Verify all field dimensions and that the work fits the work of other trades. Perform all cutting, fitting, and drilling required. Furnish all necessary templates and patterns required to build items into work of other trades. Provide holes and connections for the attachment of work of other trades.

3.2 GENERAL FABRICATION AND INSTALLATION

A. Metal surfaces shall be clean and free from mill scale, flake rust, and rust pitting, well-formed and finished to shape and size, with sharp lines and angles and smooth surfaces. Shearing and punching shall leave clean true lines and surfaces. Weld or rivet permanent connections. Welds and flush rivets shall be finished flush and smooth on surfaces that will be exposed after installation. Welds shall be continuous unless otherwise noted. Welds shall not have voids or pockets and shall be ground to provide smooth transitions between metal surfaces. Do not use screws or bolts where they can be avoided; where used, heads shall be countersunk, screwed up tight and threads nicked to prevent loosening.

B. Fastenings shall be concealed where practicable. Thickness of metal and details of assembly and supports shall give ample strength and stiffness. Joints exposed to weather shall be formed to exclude water. Provide holes and connections for the work of other trades.

C. Castings shall be size determined by work type for which they form parts. Each member if possible, shall be in one piece, make joints at moldings or fillets. Casting thickness shall be uniform, sufficient to ensure perfect workmanship, required strength for design use. Make castings clean, smooth, true to pattern, free from defects. Moldings, ornaments shall be rather more deeply cut than indicated to counteract flattening effects of casting, finishing; exactly reproduce form, feeling of models. Edges shall be sharp, come from molds clean, smooth, perfect.

D. Non-slip surfaces shall be made safe for foot traffic with non-slip abrasive embedded uniformly in wearing surface at casting time.

E. Connections and accessories shall be adequate to safely sustain, withstand stresses, strains, to which they will be normally subjected.

1. Connections to steel unless otherwise specified shall be steel.

2. Connections to genuine wrought iron work shall be wrought iron or steel.

3. Connections to cast iron, unless otherwise specified shall be steel.

4. Bolts, nuts, screws for exterior work shall be electrogalvanized, unless otherwise noted.

F. Furnish all standard screws, bolts, washers, and other such fastening devices as are necessary for attaching this work to other materials. Anchors and other connecting devices required in concrete or masonry shall be built-in as the work progresses. NOTE: Special attention shall be given to the firm and secure anchoring of overhead mounted materials and equipment.

G. Do cutting, punching, drilling, tapping required for attachment of other work coming in contact with miscellaneous metal where indicated or where directions for same are given prior to or with review of shop drawings.

H. Unless otherwise indicated, bolt, and screw heads shall be flat countersunk in exposed faces of ornamental or finished character; elsewhere as required. Cut off bolts, screws, etc., where exposed, flush with nuts, or other adjacent metal. Except as otherwise required, weld shop-assembled connections; welds, bolts, or machine screws may be used for field connections. Exposed fastenings shall be the same materials, color, and finish as metal to which they apply, unless otherwise required.

I. Make up threaded connections tightly so that threads will be entirely concealed by fittings.

J. Work to be built in with masonry shall be of form required for anchorage, or be provided with suitable anchors, expansion shields, toggle bolts, etc. as required for proper anchorage. Fastening to wood plugs in masonry shall not be permitted.

K. Install all supporting members, fastening, framing, hangers, bracing, brackets, straps, bolts, angles, and the like required to set, connect work rigidly and properly to structural steel, masonry, other construction.

L. All items shall be installed plumb, straight, square, level and in proper elevation, plane, location and alignment with other work.

3.3 STEEL RAILING FABRICATION AND INSTALLATION

A. Fabricate handrails and railing systems to comply with the requirements indicated for design, dimensions, details, finish, member sizes and anchorage but not less than that required to support structural loads.

B. Interconnect railing and handrail members by butt-welding or welding with internal connectors, unless otherwise indicated. At tee and cross intersections, cope ends of intersecting members to fit contour of pipe to joined end and weld all around. Form changes in direction of railings by welding fabricated flush elbow fittings, by radius bends as indicated, or by flush radius bends. Remove burrs and splatter.

C. Form simple and compound curves by bending pipe in jigs to produce uniform curvature for each configuration required. Maintain cylindrical cross section of pipe throughout the entire bend without buckling, twisting, cracking or otherwise deforming.

D. For components exposed to exterior or moist environments, provide weep holes or other means of evacuating entrapped water. All exterior rails, fittings and brackets shall be hot-dipped galvanized after fabrication.

E. Provide wall returns at all ends to adjacent surfaces and secure as required. Close exposed ends by welding 3/16" thick steel plate in place, except where clearance of end of pipe and adjoining wall surface is less than ¼”, or unless otherwise detailed.

F. Welds shall be continuous and thoroughly fused without undercutting or overlap. Grind exposed welds smooth to form a uniformly smooth surface.

G. Provide miscellaneous steel for connection of rail supports as detailed on the Drawings. Do not support railing temporarily by any means that does not satisfy structural performance requirements.

H. Set rails plumb and aligned. Set rails horizontal or parallel to rake of stairs. Support wall handrails on brackets, in accordance with railing engineering requirements. Space closer together if so indicated on the Drawings. Connect railing posts to stair framing to stair framing by direct welding, unless otherwise indicated.

I. Install handrail brackets away from handrail ends and finish ends with return fittings. Use drill-in expansion anchors at concrete or masonry walls. Mount handrails only on gypsum board assemblies that have been reinforced to receive railing anchors.

J. Provide expansion joints in railings at intervals not to exceed forty (40') feet. Provide slip joints with internal sleeves extending two (2") inches beyond the joint on either side. Fasten the internal sleeve securely on one side only. Locate expansion joints within six (6") inches of posts.

K. Where railings are to be set in concrete, railing posts shall be set in 6" matching sleeves as follows: Clean dust and foreign matter from sleeves. Moisten interior of hole and surrounding surface with clean water. Mix fast setting cement with water and stir until a smooth, creamy consistency is produced. Pour mixture into annular space until it overflows the hole. Taper cement away from rails to promote proper drainage. Wipe off excess, leaving a build-up of approximately 1/8".

END OF SECTION

PART 1 - GENERAL

1.1 RELATED DOCUMENTS

A. Drawings and general provisions of the Contract, including General and Supplementary Conditions and Division 1 Specification Sections, apply to this Section.

1.2 SUMMARY

A. This Section includes the following:

1. Framing with dimension lumber.
2. Wood furring, grounds, nailers, and blocking.
3. Subflooring.
4. Underlayment.

1.3 DEFINITIONS

A. Rough Carpentry:
Carpentry work not specified in other Sections and not exposed, unless otherwise specified.

1.4 SUBMITTALS

A. General:
Submit each item in this Article according to the Conditions of the Contract and Division 1 Specification Sections.

B. Product Data for the following products:

1. Underlayment.
2. Construction adhesives.

C. Material certificates for dimension lumber specified to comply with minimum allowable unit stresses. Indicate species and grade selected for each use and design values approved by the American Lumber Standards Committee's (ALSC) Board of Review.

D. Wood treatment data as follows, including chemical treatment manufacturer's instructions for handling, storing, installing, and finishing treated materials:

1. For each type of preservative treated wood product, include certification by treating plant stating type of preservative solution and pressure process used, net amount of preservative retained, and compliance with applicable standards.
2. For fire retardant treated wood products, include certification by treating plant that treated materials comply with specified standard and other requirements as well as data relative to bending strength, stiffness, and fastener-holding capacities of treated materials.

E. Material test reports from a qualified independent testing agency indicating and interpreting test results relative to compliance of fire-retardant-treated wood products with requirements indicated.

1.5 QUALITY ASSURANCE

A. Single-Source Responsibility for Fire-Retardant-Treated Wood:
Obtain each type of fire-retardant treated wood product from one source and by a single producer.

1.6 DELIVERY, STORAGE, AND HANDLING

A. Keep materials under cover and dry. Protect from weather and contact with damp or wet surfaces. Stack lumber, plywood, and other panels. Provide for air circulation within and around stacks and under temporary coverings.

1. For lumber and plywood pressure treated with waterborne chemicals, place spacers between each bundle to provide air circulation.

PART 2 - PRODUCTS

2.1 MANUFACTURERS

A. Available Manufacturers:
Subject to compliance with requirements, manufacturers offering products that may be incorporated into the Work include, but are not limited to, the following:

1. Wood-Preservative-Treated Materials:

gggg. Baxter: J. H. Baxter Co.

hhhh. Chemical Specialties, Inc.

iiii. Continental Wood Preservers, Inc.

jjjj. Hickson Corp.

kkkk. Hoover Treated Wood Products, Inc.

llll. Osmose Wood Preserving, Inc.

2. Fire-Retardant-Treated Materials, Interior Type A:

a. Baxter: J. H. Baxter Co.

b. Chemical Specialties, Inc.

c. Continental Wood Preservers, Inc.

d. Hickson Corp.

e. Hoover Treated Wood Products, Inc.

2.2 LUMBER, GENERAL

A. Lumber Standards:
Comply with DOC PS 20, "American Softwood Lumber Standard," and with applicable grading rules of inspection agencies certified by ALSC's Board of Review.

B. Inspection Agencies:
Inspection agencies, and the abbreviations used to reference them, include the following:

1. NELMA - Northeastern Lumber Manufacturers Association.

2. NLGA - National Lumber Grades Authority (Canadian).

3. RIS- Redwood Inspection Service.

4. SPIB - Southern Pine Inspection Bureau.

5. WCLIB- West Coast Lumber Inspection Bureau.

6. WWPA- Western Wood Products Association.

C. Grade Stamps:
Provide lumber with each piece factory marked with grade stamp of inspection agency evidencing compliance with grading rule requirements and identifying grading agency, grade, species, moisture content at time of surfacing, and mill.

D. Where nominal sizes are indicated, provide actual sizes required by DOC PS 20 for moisture content specified. Where actual sizes are indicated, they are minimum dressed sizes for dry lumber.

1. Provide dressed lumber, S4S, unless otherwise indicated.

2.3 WOOD-PRESERVATIVE-TREATED MATERIALS

A. General:
Where lumber or plywood is indicated as preservative treated or is specified to be treated, comply with applicable requirements of AWPA C2 (lumber) and AWPA C9 (plywood). Mark each treated item with the Quality Mark Requirements of an inspection agency approved by ALSC's Board of Review.

1. Do not use chemicals containing chromium or arsenic.

B. Pressure treat aboveground items with waterborne preservatives to a minimum retention of 0.25 lb./cu. ft. (4.0 kg/cu. m). After treatment, kiln-dry lumber and plywood to a maximum moisture content of 19 and 15 percent, respectively. Treat indicated items and the following:

1. Wood cants, nailers, curbs, equipment support bases, blocking, stripping, and similar members in connection with roofing, flashing, vapor barriers, and waterproofing.

2. Wood sills, sleepers, blocking, furring, stripping, and similar concealed members in contact with masonry or concrete.

3. Wood framing members less than 18 inches (460 mm) above grade.

4. Wood floor plates installed over concrete slabs directly in contact with earth.

C. Complete fabrication of treated items before treatment, where possible. If cut after treatment, apply field treatment complying with AWPA M4 to cut surfaces. Inspect each piece of lumber or plywood after drying and discard damaged or defective pieces.

2.4 FIRE-RETARDANT-TREATED MATERIALS

A. General:
Where fire-retardant-treated wood is indicated, comply with applicable requirements of AWPA C20 (lumber) and AWPA C27 (plywood). Identify fire-retardant-treated wood with appropriate classification marking of UL; U.S. Testing; Timber Products Inspection, Inc.; or another testing and inspecting agency acceptable to authorities having jurisdiction.

1. Research or Evaluation Reports:
Provide fire-retardant-treated wood acceptable to authorities having jurisdiction and for which a current model code research or evaluation report exists that evidences compliance of fire-retardant-treated wood for application indicated.

B. Interior Type A:
For interior locations, use chemical formulation that produces treated lumber and plywood with the following properties under conditions present after installation:

1. Bending strength, stiffness, and fastener-holding capacities are not reduced below values published by manufacturer of chemical formulation under elevated temperature and humidity conditions simulating installed conditions when tested by a qualified independent testing agency.

2. No form of degradation occurs due to acid hydrolysis or other causes related to treatment.

3. Contact with treated wood does not promote corrosion of metal fasteners.

2.5 DIMENSION LUMBER

A. General:
Provide dimension lumber of grades indicated according to the ALSC National Grading Rule (NGR) provisions of the inspection agency indicated.

B. Framing Other than Non-Load-Bearing Partitions:
Provide framing of the following grade and species:

1. Grade: No. 2.

2. Species: Southern pine; SPIB.

3. Species: Mixed southern pine; SPIB.

4. Species: Any species above.

2.6 MISCELLANEOUS LUMBER

A. General:
Provide lumber for support or attachment of other construction, including rooftop equipment curbs and support bases, cant strips, bucks, nailers, blocking, furring, grounds, stripping, and similar members.

B. Fabricate miscellaneous lumber from dimension lumber of sizes indicated and into shapes shown.

C. Moisture Content:
19 percent maximum for lumber items not specified to receive wood preservative treatment.

D. Grade:
For dimension lumber sizes, provide No. 3 or Standard grade lumber per ALSC's NGRs of any species. For board-size lumber, provide No.3 Common grade per NELMA, NLGA, or WWPA; No.2 grade per SPIB; or Standard grade per NLGA, WCLIB or WWPA of any species.

2.7 FASTENERS

A. General:
Provide fasteners of size and type indicated that comply with requirements specified in this Article for material and manufacture.

1. Where rough carpentry is exposed to weather, in ground contact, or in area of high relative humidity, provide fasteners of Type 304 stainless steel.

B. Nails, Wire, Brads, and Staples: FS FF-N-105.

C. Power-Driven Fasteners: CABO NER-272.

D. Wood Screws: ASME Bl8.6.l.

E. Lag Bolts: ASME Bl8.2.l. (ASME B18.2.3.8M)

F. Bolts:
Steel bolts complying with ASTM A 307, Grade A (ASTM F 568, Property Class 4.6); with ASTM A 563 (ASTM A 563M) hex nuts and, where indicated, flat washers.

PART 3 - EXECUTION

3.1 INSTALLATION, GENERAL

A. Discard units of material with defects that impair quality of rough carpentry and that are too small to use with minimum number of joints or optimum joint arrangement.

B. Set rough carpentry to required levels and lines, with members plumb, true to line, cut, and fitted.

C. Fit rough carpentry to other construction; scribe and cope as required for accurate fit. Correlate location of furring, nailers, blocking, grounds, and similar supports to allow attachment of other construction.

D. Apply field treatment complying with AWPA M4 to cut surfaces of preservative-treated lumber and plywood.

E. Securely attach rough carpentry work to substrate by anchoring and fastening as indicated, complying with the following:

1. CABO NER-272 for power-driven staples, P-nails, and allied fasteners.

2. Published requirements of metal framing anchor manufacturer.

3. "Recommended Nailing Schedule" of referenced framing standard and with AFPA's "National Design Specifications for Wood Construction."

4. "Table 23-1-Q--Nailing Schedule" of the Uniform Building Code.

5. "Table 2305.2--Fastening Schedule" of the BOCA National Building Code.

6. "Table 1705.1--Fastening Schedule," of the Standard Building Code.

F. Use common wire nails, unless otherwise indicated. Use finishing nails for finish work. Select fasteners of size that will not fully penetrate members where opposite side will be exposed to view or will receive finish materials. Make tight connections between members. Install fasteners without splitting wood; predrill as required.

G. Use stainless-steel nails where rough carpentry is exposed to weather, in ground contact, or in area of high relative humidity.

H. Countersink nail heads on exposed carpentry work and fill holes with wood filler.

3.2 WOOD GROUNDS, NAILERS, BLOCKING, AND SLEEPERS

A. Install wood grounds, nailers, blocking, and sleepers where shown and where required for screeding or attaching other work. Form to shapes shown and cut as required for true line and level of attached work. Coordinate locations with other work involved.

B. Attach to substrates to support applied loading. Recess bolts and nuts flush with surfaces, unless otherwise indicated. Build into masonry during installation of masonry work. Where possible, anchor to form work before concrete placement.

C. Install permanent grounds of dressed, preservative-treated, key-beveled lumber not less than 1-1/2 inches (38 mm) wide and of thickness required to bring face of ground to exact thickness of finish material. Remove temporary grounds when no longer required.

3.3 WOOD FRAMING, GENERAL

A. Framing Standard:
Comply with AFPA's "Manual for Wood Frame Construction," unless otherwise indicated.

B. Install framing members of size and at spacing indicated.

C. Do not splice structural members between supports.

END OF SECTION

PART 1 GENERAL

1.1 SUMMARY

A. Related Documents:

1. Drawings and general provisions of the Subcontract apply to this Section.

2. Review these documents for coordination with additional requirements and information that apply to work under this Section.

B. Section Includes:

1. Standing and running trim.

2. Wood paneling.

3. Interior wood door frames.

4. Wood shelves (trim) including related hardware.

5. Perforated hardboard (“Pegboard”).

6. Stripping, blocking, furring and nailers required for millwork and installed from face of walls, floors and ceilings.

7. Complete shop finishing of transparent finished millwork.

C. Related Sections:

1. Division 01 Section "General Requirements."

2. Division 01 Section "Special Procedures."

3. Division 06 Section "Rough Carpentry".

4. Division 06 Section "Architectural Wood Casework".

5. Division 08 Section "Flush Wood Doors".

6. Division 09 Section "Painting".

1.2 REFERENCES

A. General:

1. The following documents form part of the Specifications to the extent stated. Where differences exist between codes and standards, the one affording the greatest protection shall apply.

2. Unless otherwise noted, the referenced standard edition is the current one at the time of commencement of the Work.

3. Refer to Division 01 Section "General Requirements" for the list of applicable regulatory requirements.

B. Architectural Woodwork Institute

1. Architectural Woodwork Quality Standards. Latest edition.

1.3 SUBMITTALS

A. Submit under provisions of Divisions 01 Section "General Requirements" and "Special Procedures."

B. Shop Drawings: Submit for all millwork items and related accessories. Indicate anchorage methods.

C. Samples:

1. Submit veneer flitches as hereinafter specified.

2. Submit 6 by 8 inches (150 by 200 mm) samples each wood specie which is to receive job applied transparent finish.

3. Submit samples to establish permissible variations for compatibility of color and grain.

4. Submit for shop applied wood finishes. Submit on actual species specified. Samples shall be affixed with label giving full description of finish and number of coats.

1.4 QUALITY ASSURANCE

A. Millwork shall be manufactured in accordance with the AWI Standards in the grades hereinafter specified. In event of a dispute as to the quality grades, all parties will call upon an inspection under AWI's inspection procedures and agree to abide by the decision of AWI.

1.5 DELIVERY, STORAGE, AND HANDLING

A. Work of this Section shall be stored flat in a dry, well ventilated space protected from inclement weather. Use care in handling and storing materials to assure proper ventilation and to protect edges and avoid any disfigurement, scratches or corner bruises. Damaged or warped material shall be immediately replaced with new, undamaged material.

B. Make adequate provisions for receiving all materials. Sign for and inspect deliveries. If damage is observed or discovered, note the same on delivery slip and notify the University. If damage is concealed, notify trucker and the University when discovered. After delivery, Subcontractor assumes liability for all subsequent damage to materials and equipment.

C. Make no deliveries of millwork until areas are completely enclosed and wet work completed.

PART 2 PRODUCTS

2.1 MATERIALS

A. General: Items noted or specified as to species (i.e., White Maple", "Birch", etc.) may be presumed to receive a transparent finish. Items which are not designated by species or which are designated or specified as "wood" or "hardwood" may be presumed to receive an opaque finish.

B. Solid Stock: Solid stock trim used with plywood items shall match the plywood unless otherwise noted.

1. Items noted or specified as "White Maple": (Here, specify how sawn).

2. Items noted or specified as "Wood", "Hardwood", or not otherwise designated by species: Natural Birch.

2.2 FABRICATION GRADES

A. Transparent Finished items: Premium Grade.

B. Opaque Finished Items: Custom Grade.

C. Drawings indicate general appearance standards only and are not intended to reduce compliance with specified grade of millwork.

2.3 FABRICATION

A. Surfacing: Wood items shall be smoothly machines and sanded on exposed surfaces as required by grade.

B. Frames: Jambs and heads shall be rabbeted.

C. Shelves: Adjustable shelving shall be banded on all exposed edges; fixed shelving shall be banded on front edge. Edge bands may be solid wood or veneer edge.

PART 3 EXECUTION

3.1 CONDITION OF SURFACES

A. Inspect materials and surfaces prior to installation and report all defects. Proceeding with installation implies acceptance of surfaces as satisfactory.

B. Clean materials as required.

C. Do not attempt to install equipment which is missing parts which will require disassembly or removal at a later time in order to install parts necessary for a functional operation.

3.2 PREPARATION

A. Coordinate work under this Section with other trades whose work adjoins, combines or aligns with same. Take such field measurements as may be required. Report any major discrepancy between Drawings and field dimensions to the Project Manager and secure directions before proceeding.

3.3 INSTALLATION

A. General:

1. Set work in place, scribe plumb, square and level and secure in position indicated with required fastenings, clips, braces, anchors, blocking, shimming and other fittings required to properly secure.

2. Ease exposed edges.

3. Blind nail items where possible; where not possible, use finish nails set for putty. Staples, T-nails and similar fastenings are not permitted for exposed surfaces.

4. Make standing trim single lengths, running trim in longest lengths possible. Miter cut running joints tight and flush on exposed faces and edges. Miter or cope inside corner joints; miter outside corners. Miter and return exposed ends, returns less than 1" longer than thickness, drilled, glued and nailed.

5. Wood millwork not shop finished shall be backprimed (under Division 09 "Painting") prior to setting in place.

6. Hammer marks and other defects caused by installation procures may result in rejection of the particular item damaged.

B. Paneling: Locate joints as indicated, plumb and level, butted tight to adjacent pieces and metal trim, grain direction vertical. Panels shall be a single pied between indicated joints. Install panels using concealed metal clips; face nailing not permitted.

C. Shelves: Shelving which in not noted as adjustable may be presumed to be fixed. Fixed shelving shall be installed on ¾ by 3-1/2 inches (20 mm by 90 mm) hook strips continuous three sides. Provide shelf and rod support to limit spans to 4 feet (1.22 m). Install symmetrically. Adjustable shelving shall be installed with specified hardware, surface mounted.

D. Install hardboard over wood spacers in one piece without joints. Fasten with oval head wood screws at 8 inches (200 mm) o.c. around perimeter and at 16 inches (400 mm) o.c. at intermediate bearings.

3.4 CLEANUP

A. Upon completion of the work, remove all debris, rubbish and surplus materials from the site, resulting from work under this Section.

END OF SECTION

PART 1 - GENERAL

1.1 RELATED DOCUMENTS

A. Drawings and general provisions of the Contract, including General and Supplementary Conditions and Division 1 Specification Sections, apply to this Section.

1.2 SUMMARY

A. This Section includes the following:

1. Laminate-clad cabinets (plastic-covered casework).

2. Plastic-laminate countertops.

3. Shop finishing of woodwork.

B. Related Sections:
The following Sections contain requirements that relate to this Section:

1. Division 6 Section "Rough Carpentry" for exposed framing and for furring, blocking, shims, and hanging strips for installing interior woodwork.

2. Division 8 Section "Flush Wood Doors" for doors specified by reference to architectural woodwork standards.

1.3 DEFINITIONS

A. Interior architectural woodwork includes wood furring, blocking, shims, and hanging strips for installing woodwork items unless concealed within other construction prior to woodwork installation.

1.4 SUBMITTALS

A. General:
Submit each item in this Article according to the Conditions of the Contract and Division 1 Specification Sections.

B. Product data for each type of product and process specified and incorporated into items of architectural woodwork during fabrication, finishing, and installation.

C. Fire-retardant-treatment data for material treated to reduce combustibility. Include certification by treating plant that treated materials comply with requirements.

D. Shop drawings showing location of each item, dimensioned plans and elevations, large-scale details, attachment devices, and other components.

1. Show details full size.

2. Show locations and sizes of furring, blocking, and hanging strips, including concealed blocking and reinforcing specified in other Sections.

3. Show locations and sizes of cutouts and holes for plumbing fixtures, faucets, soap dispensers, and other items installed in architectural woodwork.

E. Samples for initial selection of the following in the form of manufacturer's color charts consisting of actual units or sections of units showing the full range of colors, textures, and patterns available for each type of material indicated.

1. Shop-applied opaque finishes.

2. Plastic laminates.

F. Samples for verification of the following:

1. Laminate-clad panel products, 8 by 10 inches (200 by 250 mm), for each type, color, pattern, and surface finish, with separate samples of unfaced panel product used for core.

2. Exposed cabinet hardware, one unit for each type and finish.

G. Product certificates signed by woodwork fabricator certifying that products comply with specified requirements.

H. Qualification data for firms and persons specified in the "Quality Assurance" Article to demonstrate their capabilities and experience. Include lists of completed projects with project names and addresses, names and addresses of architects and owners, and other information specified.

1.5 QUALITY ASSURANCE

A. Single-Source Responsibility for Fabrication and Installation:
Engage a qualified woodworking firm to assume undivided responsibility for fabricating, finishing, and installing woodwork specified in this Section.

B. Quality Standard:
Except as otherwise indicated, comply with the following standard:

1. AWl Quality Standard:
"Architectural Woodwork Quality Standards" of the Architectural Woodwork Institute for grades of interior architectural woodwork, construction, finishes, and other requirements.

a. Provide AWI Certification Labels or Certificates of Compliance indicating that woodwork meets requirements of grades specified.

A. Fire-Test-Response Characteristics:

Provide materials with the following fire-test-response characteristics as determined by testing identical products per ASTM test method indicated below by UL, Warnock Hersey, or another testing and inspecting agency acceptable to authorities having jurisdiction. Identify fire-retardant-treated material with appropriate markings of applicable testing and inspecting agency in the form of separable paper label or, where required by authorities having jurisdiction, imprint on surfaces of materials that will be concealed from view after installation.

1. Surface-Burning Characteristics:
   Not exceeding values indicated below, tested per ASTM E 84 for standard time period (10 minutes).

   a. Flame Spread: 75.

   b. Smoke Developed: 450.

1.6 DELIVERY, STORAGE, AND HANDLING

A. Protect woodwork during transit, delivery, storage, and handling to prevent damage, soilage, and deterioration.

B. Do not deliver woodwork until painting and similar operations that could damage, soil, or deteriorate woodwork have been completed in installation areas. If woodwork must be stored in other than installation areas, store only in areas whose environmental conditions meet requirements specified in "Project Conditions."

1.7 PROJECT CONDITIONS

A. Environmental Limitations:
   Do not deliver or install woodwork until building is enclosed, wet work is completed, and HVAC system is operating and will maintain temperature and relative humidity at occupancy levels during the remainder of the construction period.

B. Environmental Limitations:
   Obtain and comply with woodwork fabricator's and Installer's coordinated advice for optimum temperature and humidity conditions for woodwork during its storage and installation. Do not install woodwork until these conditions have been attained and stabilized so that woodwork will be within plus or minus 1.0 percent of optimum moisture content from date of installation through remainder of construction period.

C. Field Measurements:
   Where woodwork is indicated to be fitted to other construction, check actual dimensions of other construction by accurate field measurements before fabrication, and show recorded measurements on final shop drawings. Coordinate fabrication schedule with construction progress to avoid delaying the Work.

   1. Verify locations of concealed framing, blocking, reinforcements, and furring that support woodwork by accurate field measurements before being enclosed. Record measurements on final shop drawings.

2. Where field measurements cannot be made without delaying the Work, guarantee dimensions and proceed with fabricating woodwork without field measurements. Provide allowance for trimming at site and coordinate construction to ensure that actual dimensions correspond to guaranteed dimensions.

1.8 COORDINATION

A. Coordinate sizes and locations of framing, blocking, furring, reinforcements, and other related units of Work specified in other Sections to ensure that interior architectural woodwork can be supported and installed as indicated.

B. Hardware Coordination:
Distribute copies of approved schedule for cabinet hardware specified in Division 8 Section "Door Hardware" to fabricator of architectural woodwork; coordinate cabinet shop drawings and fabrication with hardware requirements.

PART 2 - PRODUCTS

2.1 MATERIALS

A. General:
Provide materials that comply with requirements of the AWI quality standard for each type of woodwork and quality grade indicated and, where the following products are part of interior woodwork, with requirements of the referenced product standards that apply to product characteristics indicated:

1. Hardboard: AHA A135.4.

2. Medium-Density Fiberboard: ANSI A208.2.

3. Particleboard: ANSI A208.1, Grade M-2.

4. Softwood Plywood: PS 1.

5. Hardwood Plywood and Face Veneers: HPVA HP-1.

B. Formaldehyde Emission Level for Medium-Density Fiberboard:
Comply with requirements of NPA9.

C. Fiberboard:
Medium-density fiberboard made without formaldehyde and complying with ANSI A208.2.

1. Product: Subject to compliance with requirements, provide Medite II by Medite Corp.

D. High-Pressure Decorative Laminate:
NEMA LD 3, grades as indicated, or if not indicated, as required by woodwork quality standard.

1. Available Manufacturers:

Subject to compliance with requirements, manufacturers offering high-pressure decorative laminates that may be incorporated in the Work, but are limited to the following:

a. Nevamar Corp.

2.2 FIRE-RETARDANT-TREATED MATERIALS

A. General:
Where indicated, use materials impregnated with fire-retardant chemical formulations indicated by a pressure process or other means acceptable to authorities having jurisdiction to produce products with fire-test-response characteristics specified.

B. Fire-Retardant Chemicals:
Use chemical formulations that do not bleed through or otherwise adversely affect finishes. Do not use colorants in solution to distinguish treated material from untreated material.

C. Fire-Retardant-Treated Lumber:
Comply with the following:

1. Low-Hygroscopic Formulation: Interior Type A per AWPA C20.

2. Mill lumber after treatment, within limits set for wood removal that does not affect listed fire-test-response characteristics, using a woodworking plant certified by testing and inspecting agency.

3. Kiln-dry material before and after treatment to levels required for untreated material.

4. Discard treated material that does not comply with requirements of referenced woodworking standard. Do not use twisted, warped, bowed, discolored, or otherwise damaged or defective material.

5. Available Products:
Subject to compliance with requirements, products that may be incorporated in the Work include, but are not limited to, the following:

a. Low-Hygroscopic Formulation (Type A):

6. D-Blaze; J. H. Baxter Co.

7. D-Blaze; Chemical Specialties, Inc.

8. Pyro-guard; Continental Wood Preservers, Inc.

9. Dricon; Hickson Corp.

10. Pyro-guard; Hoover Treated Wood Products, Inc.

D. Fire-Retardant Fiberboard:

Medium-density fiberboard panels complying with ANSI A208.2, made from softwood fibers, synthetic resins, and fire-retardant chemicals mixed together at time of panel manufacture to achieve products identical to those tested for flame spread of 25 or less and for smoke developed of 200 or less per ASTM E 84 by UL, Warnock Hersey, or another testing and inspecting agency acceptable to authorities having jurisdiction. Identify products with appropriate markings of applicable testing and inspecting agency.

1. Product:
   Subject to compliance with requirements, provide Medite FR by Medite Corp.

2.3 CABINET HARDWARE AND ACCESSORY MATERIALS

A. General:
   Provide cabinet hardware and accessory materials associated with architectural cabinets, except for items specified in Division 8 Section "Door Hardware."

B. Cabinet Hardware Schedule:
   Refer to schedule at end of this Section for cabinet hardware required for architectural cabinets.

C. Hardware Standard:
   Comply with BHMA A156.9 for items indicated by reference to BHMA numbers or referenced to this standard.

D. Exposed Hardware Finishes:
   For exposed hardware, provide finish that complies with BHMA A156.I8 for BHMA code number indicated.

   1. Satin Stainless Steel, Stainless-Steel Base: BHMA 630.

E. For concealed hardware provide manufacturer's standard finish that complies with product class requirements for BHMA A156.9.

2.4 INSTALLATION MATERIALS

A. Furring, Blocking, Shims, and Hanging Strips: Fire-retardant-treated softwood lumber, kiln dried to less than 15 percent moisture content.

B. Screws:
   Select material, type, size, and finish required for each use. Comply with ASME B 18.6.1 for applicable requirements.

C. Nails:
   Select material, type, size, and finish required for each use. Comply with FS FF- N-105 for applicable requirements.

D. Anchors:

Select material, type, size, and finish required for each substrate for secure anchorage. Provide nonferrous metal or hot-dip galvanized anchors and inserts on inside face of exterior walls and elsewhere as required for corrosion resistance. Provide toothed steel or lead expansion bolt devices for drilled-in-place anchors.

2.5 FABRICATION, GENERAL

A. Interior Woodwork Grade:
Provide interior woodwork complying with the referenced quality standard and of the following grade:

1. Grade: Custom.

B. Wood Moisture Content:
Comply with requirements of referenced quality standard for wood moisture content in relation to relative humidity conditions existing during time of fabrication and in installation areas.

C. Sand fire-retardant-treated wood lightly to remove raised grain on exposed surfaces before fabrication.

D. Fabricate woodwork to dimensions, profiles, and details indicated. Ease edges to radius indicated for the following:

1. Corners of cabinets and edges of solid-wood (lumber) members 3/4 inch (19 mm) thick or less: l/16 inch (1.5 mm).

2. Edges of rails and similar members more than 3/4 inch (19 mm) thick: l/8 inch (3 mm).

3. Corners of cabinets and edges of solid-wood (lumber) members and rails: l/16 inch (1.5 mm).

E. Complete fabrication, including assembly, finishing, and hardware application, before shipment to Project site to maximum extent possible. Disassemble components only as necessary for shipment and installation. Where necessary for fitting at site, provide ample allowance for scribing, trimming, and fitting.

1. Trial fit assemblies at the fabrication shop that cannot be shipped completely assembled. Install dowels, screws, bolted connectors, and other fastening devices that can be removed after trial fitting. Verify that various parts fit as intended and check measurements of assemblies against field measurements indicated on approved shop drawings before disassembling for shipment.

F. Shop-cut openings, to maximum extent possible, to receive hardware, appliances, plumbing fixtures, electrical work, and similar items. Locate openings accurately and use templates or roughing-in diagrams to produce accurately sized and shaped openings. Smooth edges of cutouts and, where located in countertops and similar exposures, seal edges with a water-resistant coating.

2.6 LAMINATE-CLAD CABINETS (PLASTIC-COVERED CASEWORK)

A. Quality Standard:
Comply with AWI Section 400 requirements for laminate-clad cabinets - Custom Grade.

B. AWI Type of Cabinet Construction:
Reveal overlay (l/4" Reveal)

C. Laminate Cladding for Exposed Surfaces: High-pressure decorative laminate complying with the following requirements:

1. Horizontal Surfaces Other than Tops: GP-50, 0.050-inch (1.270-mm) nominal thickness.

2. Vertical Surfaces: GP-50, 0.050-inch (1.270-mm) nominal thickness.

3. Edges: GP-50, 0.050-inch (1.270-mm) nominal thickness.

D. Materials for Semi exposed Surfaces:
Provide surface materials indicated below:

1. Surfaces Other than Drawer Bodies: High-pressure decorative laminate, Grade GP-28.

2. Drawer Sides and Backs: Solid hardwood lumber, shop finished.

3. Drawer Bottoms: Thermoset decorative overlay.

E. Colors, Patterns, and Finishes:
Provide materials and products that result in colors and textures of exposed laminate surfaces complying with the following requirements:

1. Provide selections from laminate manufacturer's full range of colors and finishes in the following categories:

a. Solids

b. Woodgrains

F. Provide dust panels of l/4-inch (6.4-mm) plywood or tempered hardboard above compartments and drawers except where located directly under tops.

2.7 COUNTERTOPS

A. Quality Standard:
Comply with AWI Section 400 requirements for countertops - Custom Grade.

B. Type of Top:
High-pressure decorative laminate complying with the following:

1. Grade: GP-50, 0.050-inch (1.270-mm) nominal thickness.

2. Colors, Patterns, and Finishes:
   Provide materials and products that result in colors and textures of exposed laminate surfaces complying with the following requirements:

   a. Provide selections from manufacturer's full range of colors and finishes in the following categories:

      i. Solid

      ii. Woodgrains

3. Edge Treatment: Same as laminate cladding on horizontal surfaces.

4. Core Material: Fire-retardant particleboard.

2.8 SHOP FINISIDNG OF INTERIOR ARCIDTECTURAL WOODWORK

A. Quality Standard:
   Comply with AWI Section 1500, unless otherwise indicated- Custom Grade.

B. General:
   The entire finish of interior architectural woodwork is specified in this Section, regardless of whether shop applied or applied after installation.

   1. Shop Finishing:
      To the greatest extent possible, finish architectural woodwork at the fabrication shop. Defer only final touch up, cleaning, and polishing until after installation.

C. General:
   The priming and shop finishing (if any) of interior architectural woodwork required to be performed at the fabrication shop are specified in this Section. Refer to Division 9 Section "Painting" for final finishing of installed architectural woodwork and for material and application requirements of prime coats for woodwork not specified to receive final finish in this Section.

D. Preparations for Finishing:
   Comply with referenced quality standard for sanding, filling countersunk fasteners, sealing concealed surfaces, and similar preparations for finishing architectural woodwork, as applicable to each unit of work.

   1. Back priming:
      Apply one coat of sealer or primer compatible with finish coats to concealed surfaces of woodwork, including backs of trim, cabinets, paneling, and ornamental work and the underside of countertops. Apply 2 coats to back of paneling. Concealed surfaces of plastic laminate-clad woodwork do not require back priming when surfaced with plastic laminate or thermoset decorative overlay.

PART 3 - EXECUTION

3.1 PREPARATION

A. Condition woodwork to average prevailing humidity conditions in installation areas before installing.

B. Before installing architectural woodwork, examine shop-fabricated work for completion and complete work as required, including back priming and removal of packing.

3.2 INSTALLATION

A. Quality Standard:
Install woodwork to comply with AWI Section I700 for the same grade specified in Part 2 of this Section for type of woodwork involved.

B. Install woodwork plumb, level, true, and straight with no distortions. Shim as required with concealed shims. Install to a tolerance of 118 inch in 96 inches (3 mm in 2,400 mm)

C. For plumb and level (including tops).

D. Scribe and cut woodwork to fit adjoining work and refinish cut surfaces or repair damaged finish at cuts.

E. Fire-Retardant-Treated Wood:
Handle, store, and install fire-retardant-treated wood to comply with recommendations of chemical treatment manufacturer, including those for adhesives used to install woodwork.

F. Anchor woodwork to anchors or blocking built in or directly attached to substrates. Secure to grounds, stripping and blocking with countersunk, concealed fasteners and blind nailing as required for complete installation. Use fine finishing nails for exposed nailing, countersunk and filled flush with woodwork and matching final finish where transparent finish is indicated.

G. Cabinets:
Install without distortion so that doors and drawers fit openings properly and are accurately aligned. Adjust hardware to center doors and drawers in openings and to provide unencumbered operation. Complete the installation of hardware and accessory items as indicated.

1. Install cabinets with no more than 1/8 inch in 96-inch (3 mm in 2400-mm) sag, bow, or other variation from a straight line.

2. Maintain veneer sequence matching of cabinets with transparent finish.

H. Tops:
Anchor securely to base units and other support systems as indicated. Calk space between backsplash and wall with specified sealant.

1. Install countertops with no more than 1/8 inch in 96-inch (3 mm in 2,400-mm) sag, bow, or other variation from a straight line.

2. Secure backsplashes to tops with concealed metal brackets at 16 inches (400 mm) O.C.

I. Complete the finishing work specified in this Section to the extent not completed at shop or before installation of woodwork. Fill nail holes with matching filler where exposed. Apply specified finish coats, including stains and paste fillers if any, to exposed surfaces where only sealer/prime coats were applied in the shop.

J. Refer to Division 9 Sections for final finishing of installed architectural woodwork.

3.3 ADJUSTING AND CLEANING

A. Repair damaged and defective woodwork where possible to eliminate functional and visual defects; where not possible to repair, replace woodwork. Adjust joinery for uniform appearance.

B. Clean, lubricate, and adjust hardware.

C. Clean woodwork on exposed and semi exposed surfaces. Touch up shop-applied finishes to restore damaged or soiled areas.

3.4 PROTECTION

A. Provide final protection and maintain conditions in a manner acceptable to fabricator and Installer that ensures that woodwork is without damage or deterioration at the time of Substantial Completion.

3.5 CABINET HARDWARE AND ACCESSORY SCHEDULE

BHMA numbers are used below to designate hardware requirements, except as otherwise indicated.

A. Butt Hinges:
2-3/4-inch (70-mm), 5-knuckle steel hinges made from 0.095-inch- (2.4-mm-) thick metal, and as follows:

B. Semi concealed Hinges for Overlay Doors: B0152l.

C. Pulls: Wire pulls, 4 inches (100 mm) long, 5/16 inches (8 mm) in diameter.

D. Adjustable Shelf Standards: B04071

1. Shelf Rests for Standards: B04081

E. Shelf Rests: B04013

F. Drawer Slides:
Side-mounted, full-extension, zinc-plated steel drawer slides with steel ball bearings, complying with BHMA Al56.9, Grade I and rated for the following loads:

1. Box Drawer Slides: 75 lbf (330 N)

G. Grommets for cable passage through countertops:
1-inch (25 mm) OD brown, molded-plastic grommets with 3/4-inch (19-mm) whole and brown plastic cap with slot for wire passage.

END OF SECTION

PART 1 - GENERAL

1.1 SECTION INCLUDES

A. Custom fabricated cabinet units

B. Countertops

C. Miscellaneous wood shelving

1.2 REFERENCES

A. The following documents, including others referenced herein, form a part of this Specification to the extent designated:

1. Architectural Woodwork Institute (AWI)

   a. Architectural Woodwork Standards

2. American National Standards Institute/Builders Hardware Manufacturers Association (ANSI/BHMA)

   a. ANSI/BHMA A156.9 Cabinet Hardware

   b. ANSI-BHMA A156.18 Materials and Finishes

3. American National Standards Institute/Hardware, Plywood and Veneer Association (ANSI/HPVA)

   a. ANSI/HPVA HP-1 American National Standard for Hardwood & Decorative Plywood

B. Bay Area Air Quality Management District (AQMD)

1. AQMD Reg. 8, Rule 51

C. California Air Resources Board (CARB)

D. California Department of Public Health

1. Standard Practice for the Testing of Volatile Organic Emissions from Various Sources Using Small-Scale Environmental Chambers

E. Forest Stewardship Council: FSC Guidelines – Forest Stewardship Council Guidelines

F. Green Seal: GS-36 – Aerosol Adhesives

G. National Electrical Manufacturers Association (NEMA)

H. NEMA LD 3 High Pressure Decorative Laminates

I. National Hardwood Lumber Association

1. NHLA Grading Rules for North American Hardwoods

J. National Institute of Standards and Technology (NIST)

1. Voluntary Product Standard PS 1, PS 20

K. South Coast Air Quality Management District: SCAQMD

1. Rule 1168 – Adhesive and Sealant Applications

L. Toxic Substances Control Act (1976)

1. Subchapter VI – Formaldehyde Standards for Composite Wood Products (2016)

1.3 SUBMITTALS

A. Submit the following in accordance with Section 01 3300, Submittal Procedures:

1. Shop drawings of architectural woodwork indicating component profiles, fastening methods, joining details, and accessories at a minimum scale of 1 1/2-inch equals one foot.

2. Catalog data for hardware and specialty items.]

B. Sustainable Design Submittals

1. Engineered Wood Products: Provide documentation that composite wood and agrifiber products are in compliance with the Toxic Substances Control Act (1976)'s amendment from 2016, Subchapter VI – Formaldehyde Standards for Composite Wood Products

2. Product Data for adhesives, documentation including printed statement of VOC content.

a. For Aerosol Adhesives: Submit Green Seal Certification to GS-36 and description of the basis of certification.

b. For Adhesives and Sealants: Submit manufacturer's certification that products comply with SCAQMD Rule 1168 in areas where exposure to freeze/thaw conditions and direct exposure to moisture will not occur. In areas where freeze/thaw conditions do exist or direct exposure to moisture can occur, submit manufacturer's certification that products comply with Bay Area AQMD Reg. 8, Rule 51 for containers larger than 16 oz and with California Air Resources Board (CARB) for containers 16 oz or less.

3. Product data for recycled content

a. Engineered Wood Products

i. Indicate recycled content; indicate percentage of pre-consumer and Product data for USDA BioPreferred Products: Indicate percentage of biobased content in the following products:

b. Adhesives

i. Description: Solvent products formulated for use in removing asbestos, carpet, and tile mastics as well as adhesive materials, including glue, tape, and gum, from various surface types.

ii. Recommended Biobased Content: 58%

c. Composite Panels

i. Countertops

1) Description: Engineered products designed to serve as horizontal work surfaces in locations such as kitchens, break rooms or other food preparation areas, bathrooms or lavatories, and workrooms

2) Recommended Biobased Content: 89%

ii. Interior Panels

1) Description: Engineered products designed specifically for interior applications and providing a surface that is impact-, scratch-, and wear-resistant and that does not absorb or retain moisture.

2) Recommended Biobased Content: 55%

C. Laboratory Test Reports for adhesives and composite-wood products, documentation indicating that products comply with the testing and product requirements of the California Department of Health Services' "Standard Practice for the Testing of Volatile Organic Emissions from Various Sources Using Small-Scale Environmental Chambers.".]

1.4 QUALITY ASSURANCE

A. Provide materials and perform work in accordance with above referenced documents.

B. Sustainable Design Requirements

1. Certified Wood Materials: Furnish softwood lumber and hardwood lumber wood materials certified in accordance with FSC Guidelines.

2. Recovered Content Materials: Furnish materials with recovered content for:

   a. Required: Particleboard/fiberboard component must be 80-100% recovered wood or wood composite

   b. Preferred: 100% recovered agricultural fiber

3. VOC emissions: Provide low VOC products.

   a. Adhesives and sealants: Comply with California's South Coast Air Quality Management District (SCAQMD) #1168 or with Bay Area AQMD Reg. 8, Rule 51 for containers larger than 16 oz and with California Air Resources Board (CARB) for containers 16 oz or less.

   b. Aerosol adhesives: Comply with Green Seal GS-36

   c. Engineered Wood Products:

      i. Formaldehyde compliance with the Toxic Substances Control Act (1976)'s amendment from 2016, Subchapter VI – Formaldehyde Standards for Composite Wood Products

      ii. VOC emission compliance with the US Green Building Council's Maximum VOC Concentration Levels outlined in the USGBC LEED BD+C New Construction Indoor Air Quality Assessment credit

1.5 DELIVERY, STORAGE AND HANDLING

A. Protect woodwork during transit, delivery, storage and handling to prevent damage, soiling and deterioration.

B. Do not deliver casework until painting, wet work and similar operations that could damage casework have been completed in installation areas. If casework must be stored in other than installation areas, store only in areas meeting requirements for installation areas.

1.6 PROJECT CONDITIONS

A. Do not install casework until required temperature and relative humidity have been stabilized and will be maintained in installation areas in accordance with AWI instructions.

PART 2 - PRODUCTS

2.1 LUMBER MATERIALS

A. Hardwood lumber: NHLA, AWI Custom grade; average moisture content of 4-9 percent; vertical grain suitable for transparent finish.

2.2 PANEL PRODUCTS

A. Softwood plywood: NIST PS 1, AWI Custom grade, with particleboard core material.

B. Hardwood plywood: ANSI/HPVA HP-1, AWI Custom grade, with particleboard core material and red oak face veneer.

C. Particleboard: AWI standard, medium density, with Type 1 moisture resistant adhesive; of grade to suit application; sanded faces.

D. Hardboard: Standard grade, untempered smooth one side.

2.3 OVERLAYS – HIGH PRESSURE LAMINATES

A. Plastic laminate: [NEMA LD 3 General Purpose, HGS 0.048-inch-thick, for horizontal surfaces VGS 0.28 inch for vertical surfaces] matte finish faces.

B. Adhesives (non-toxic, formaldehyde free) as recommended by plastic laminate manufacturer.

2.4 ACCESSORIES

A. Plastic laminate self-edge trim on plastic laminate faced panels.

B. Matching wood veneer tape on hardwood faced panels.

C. Plastic edge trim; extruded flat shape, smooth surface finish, self-locking serrated tongue, of width to match panel, color as selected, on painted softwood panels.

D. Fasteners of size and type to suit application.

E. Concealed joint fasteners of threaded steel.

2.5 HARDWARE

A. Cabinet and casework hardware to conform to ANSI/BHMA A156.19, Grade 1. Hardware finishes as designated in ANSI/BHMA A156.18.

B. Shelf standards: Formed steel channels, cut for support brackets at 1-inch centers, satin chrome finish.

C. Support brackets: Steel brackets formed to fit slots in standards, for nominal 12-inch shelves, satin chrome finish.

D. Drawer and door pulls: Recessed, satin chrome steel.

E. Cabinet locks: Keyed cylinder, two keys per lock, steel with polished chrome finish.

F. Door catches: Magnetic type.

G. Drawer slides: Galvanized steel with ball bearings separating tracks, full extension type.

H. Hinges: Fully concealed type.

2.6 FABRICATION

A. Fabricate products to AWI Custom grade standards for Face Frame cabinets with Overlay doors design.

D. Comply with requirements of referenced quality standard for moisture content of lumber at time of fabrication, and for humidity conditions in the installation area.

E. Before fabricating casework, obtain field measurements and verify dimensions and shop drawing details as required for accurate fit to other work.

F. Fabricate casework to dimensions, profiles and details indicated. Provide openings and mortises precut, where possible, to receive hardware, other items and other work. Locate openings accurately, using templates or roughing-in diagrams for proper size and shape. Smooth edges of cutoffs and, where located in countertops and similar exposures, seal edges of cutouts with a water-resistant coating.

G. Ease edges to 1/16-inch radius at corners of cabinets and edges of solid wood (lumber) members less than 1-inch in nominal thickness, 1/8-inch radius for edges of rails and similar members over 1-inch in nominal thickness.

H. Finish shelves, doors, and exposed edges with appropriate edging, wood veneer tape, plastic laminate or plastic extrusion. Use one piece for full length only.

I. Door and drawer fronts: 3/4 inch thick.

J. Apply plastic laminate finish in full, uninterrupted sheets, consistent with manufactured sizes. Fit corners and joints hairline, secure with concealed fasteners.

K. Apply laminate backing sheet to reverse sides of plastic laminate faced surfaces.

L. Complete fabrication, assembly, finishing, hardware installation, and other work before shipment to project site to maximum extent possible. Disassemble components only as necessary for shipment and installation. Where necessary for fitting at site, provide ample allowance for scribing, trimming and fitting.

M. Shop assemble casework for delivery to site in units easily handled and to permit passage through building openings.

N. Casework and cabinet hardware shall be furnished by the casework/cabinet manufacturer.

2.7 FINISHES

A. Natural finish: Sanding sealer, stain and 2 coats of satin polyurethane as specified in Section 09 9100.

PART 3 - EXECUTION

3.1 INSPECTION

A. Verify presence and accuracy of backing and support framing.

B. Verify locations and sizes of utility rough-ins associated with casework.

3.2 INSTALLATION

A. Set and secure casework in place, rigid, plumb and level.

B. Use fixture attachments in concealed locations for wall mounted components.

C. Use concealed joint fasteners to align and secure adjoining cabinet units and countertops.

D. Carefully scribe and cut casework abutting other Work, with gaps of 1/32 inch maximum. Do not use additional overlay trim for this purpose.

E. Secure cabinets to floor using appropriate angles and fasteners.

3.3 ADJUSTING

A. Adjust moving or operating parts to function smoothly and correctly.

3.4 CLEANING

A. Clean casework, counters, shelves, hardware, fittings and fixtures.

END OF SECTION

PART 1 - GENERAL

1.1 SECTION INCLUDES

A. Surface preparation.

B. Application of rolled, self-adhering waterproofing membrane system.

1.2 RELATED SECTIONS

A. Section 03346- Cast-in-Place Concrete.

1.3 REFERENCES

A. American Railway Engineering & Maintenance of Way Association (AREMA) Specification Chapter 29- Waterproofing.

B. ASTM Dl46-97:
Standard Test Methods for Sampling and Testing Bitumen-Saturated Felts and Fabrics Used in Roofing and Waterproofing.

C. ASTM D412-98a(2002)el:
Standard Test Methods for Vulcanized Rubber and Thermoplastic Elastomers -Tension.

D. ASTM D570-98:
Standard Test Method for Water Absorption of Plastics.

E. ASTM E96-00el (Method B):
Standard Test Methods for Water Vapor Transmission of Materials.

F. ASTM El54-99:
Standard Test Methods for Water Vapor Retarders Used in Contact with Earth under Concrete Slabs, on Walls, or as Ground Cover.

1.4 SUBMITTALS

A. Comply with Section 01300- Submittals.

B. Submit manufacturer's product data and application instructions.

1.5 DELIVERY, STORAGE, AND HANDLING

A. Deliver materials to site in manufacturer's original, unopened containers and packaging, with labels clearly identifying product name and manufacturer.

B. Store materials in a clean, dry area in accordance with manufacturer's instructions.

C. Store membrane cartons on pallets.

D. Do not store at temperatures above 90° F (32° C) for extended periods.

E. Keep away from sparks and flames.

F. Completely cover when stored outside. Protect from rain.

G. Protect materials during handling and application to prevent damage or contamination.

1.6 ENVIRONMENTAL REQUIREMENTS

A. Product not intended for uses subject to abuse or permanent exposure to the elements.

B. Protect rolls from direct sunlight until ready for use.

PART 2 - PRODUCTS

2.1 MANUFACTURERS

A. W. R. Meadows, Inc., P. 0. Box 338, Hampshire, Illinois 60140-0338. Telephone (800) 342-5976 or (847) 683-4500. Fax (847) 683-4544. Website www.wrmeadows.com.

2.2 MATERIALS

A. Rolled, Self-Adhering Waterproofing Membrane: Polymeric waterproofing membrane protected by release paper on cross-laminated polyethylene carrier film with exposed polymeric membrane strips on both sides protected by pull-off release strips.

1. Performance Based Specification:
   Waterproofing membrane shall have the following characteristics:

   a. Compliance:

      i. AREMA Specification Chapter 29- Waterproofing.

   b. Thickness:

      i. Carrier Film:

         1) 4 mils.

      ii. Polymeric Membrane:

         1) 56 mils.

   c. Tensile Strength, ASTM D 412, Die C.

      i. Carrier Film: 5,900 psi (40.71 MPa) minimum.

      ii. Polymeric Membrane: 5,90 psi (4.07 MPa) minimum.

d. Elongation, ASTM D 412, Die C:

i. Polymeric Membrane: 455 percent minimum.

e. Peel Adhesion:

i. Dry: 7 to 11 pounds/inch (125 to 196 g/mm) width, minimum.

ii. Wet: 7 to 12 pound/inch (125 to 214 g/mm) width, minimum.

f. Pliability, ASTM D 146:

i. 180 Degree Bend: Unaffected.

ii. 1 inch (25.4 mm) Mandrel at -25° F(-32° C): Unaffected.

g. Water Vapor Permeance, ASTM E 96, Method B: 2.72 x 10·9 g/Pa-s-m2.

h. Water Absorption, ASTM D 570: 0.1 percent, 72 hours maximum.

i. Resistance to Hydrostatic Head: Equivalent to 240 feet (73.1 m) of water.

j. Puncture Resistance, ASTM E 154: 67 pounds.

k. Exposure to Fungi, Soil Test: Pass, 16 weeks.

l. Color:

i. Carrier Film: White

ii. Polymeric Membrane: Black.

2.3 ACCESSORIES

A. Primer:

1. Mel-Prime Water Base Primer.
2. Mel-Prime VOC Compliant Solvent Base Primer or Standard Solvent Base Primer.
3. Equivalent Substitutions will be considered in accordance with Division 1.

B. Flashing and Fillets:

C. Mel-Rol Liquid Membrane.

D. Equivalent Substitutions will be considered in accordance with Division 1.

E. Pointing Mastic: Pointing Mastic.

F. Termination Bar: Seal tight Termination Bar.

G. Corner Tape: Detail Strip

H. Waterproofing Protection Course: Protection Course.

I. Rolled Matrix Drainage System:

1. Mel-Drain™ Rolled Matrix Drainage System.

2. Equivalent Substitutions will be considered in accordance with Division 1.

PART 3 -·EXECUTION

3.1 EXAMINATION

A. Examine surfaces to receive membrane. Notify Owner's Representative if surfaces are not acceptable. Do not begin surface preparation or application until unacceptable conditions have been corrected.

3.2 SURFACE PREPARATION

A. Protect adjacent surfaces not designated to receive waterproofing.

B. Clean and prepare surfaces to receive waterproofing in accordance with manufacturer's instructions.

C. Do not apply waterproofing to surfaces unacceptable to manufacturer.

D. Concrete surfaces must be clean, smooth and free of standing water.

E. Patch all holes and voids and smooth out any surface misalignments.

3.3 APPLICATION

A. Apply waterproofing membrane system in accordance with manufacturer's instructions.

B. Ensure accessory materials are compatible with membrane and approved by membrane manufacturer.

C. Prime surfaces to be covered in one working day with applicable primer. Re-prime uncovered surfaces next day.

D. Inspect membrane before covering and repair as necessary. Cover tears and inadequate overlaps with membrane. Seal edges of patches with pointing mastic.

E. Perform flood testing of horizontal applications, as required. Mark leaks and repair when membrane dries.

F. Avoid use of products which contain tars, solvents, pitches, polysulfide polymers, or PVC materials that may come into contact with waterproofing membrane system.

3.4 PROTECTION

A. Protect membrane on vertical and horizontal applications with immediate application of waterproofing protection course, if no drainage system is used, or rolled matrix drainage system. Use pointing mastic as an adhesive.

B. Backfill immediately using care to avoid damaging waterproofing membrane system.

END OF SECTION

PART 1 - GENERAL

1.5 RELATED DOCUMENTS

A. Drawings and general provisions of Contract, including General and Supplementary Conditions and Division 1 Specification Sections, apply to this Section.

1.6 SUMMARY

A. This Section includes the following:

1. Building insulation in batt form.

2. Vapor retarders installed under slabs on grade and on exterior walls.

B. Related Sections:
The following sections contain requirements that relate to this section:

1. Division 7 Roofing Section indicated below for roof insulation specified as part of roofing construction "Single Ply Membrane Roofing."

2. Division 9 Section indicated below for thermal insulation and sound attenuation insulation installed as part of metal-framed wall and partition assemblies:

a. “Veneer Plaster."

b. "Gypsum Drywall."

1.7 DEFINITIONS

A. Thermal Resistivity:

1. Where the thermal resistivity of insulation products are designated by "R-values," they represent the reciprocal of thermal conductivity (k-values). Thermal conductivity is the rate of heat flow through a homogenous material exactly 1 inch thick. Thermal resistivity is expressed by the temperature difference in degrees F between the two exposed faces required to cause one BTU to flow through one square foot per hour at mean temperatures indicated.

1.8 SUBMITTALS

Submit the following in accordance with Conditions of Contract and Division 1 Specification Sections:

A. Product data for each type of insulation product specified.

B. Samples of exposed insulation for initial selection purposes consisting of actual units or sections of units showing full range of colors available for each type of exposed insulation indicated.

C. Samples for verification purposes in full-size units of each type of exposed insulation indicated for each color specified.

D. Product test reports from and based on tests performed by qualified independent testing laboratory evidencing compliance of insulation products with requirements including R-values (aged values for plastic foam insulations), fire performance characteristics, perm ratings, water absorption ratings, and other properties, based on comprehensive testing of current products.

E. Research reports or evaluation reports of the model code organization acceptable to authorities having jurisdiction that evidence compliance of plastic foam insulations with building code in effect for Project.

1.9 QUALITY ASSURANCE

A. Fire Performance Characteristics:
Provide insulation materials identical to those whose indicated fire performance characteristics have been determined per the ASTM test method indicated below, by UL or other testing and inspecting organizations acceptable to authorities having jurisdiction. Identify products with appropriate markings of applicable testing and inspecting organization.

1. Surface Burning Characteristic: ASTM E 84.

2. Fire Resistance Ratings: ASTM E 119.

3. Combustion Characteristics: ASTM E 136.

B. Single-Source Responsibility for Insulation Products:
Obtain each type of building insulation from a single source with resources to provide products of consistent quality in appearance and physical properties without delaying progress of the Work.

1.10 DELIVERY, STORAGE, AND HANDLING

A. Protect insulation materials from physical damage and from deterioration by moisture, soiling, and other sources. Store inside and in a dry location. Comply with manufacturer's recommendations for handling, storage, and protection during installation.

B. Protect plastic insulation as follows:

1. Do not expose to sunlight, except to extent necessary for period of installation and concealment.

2. Always protect against ignition . Do not deliver plastic insulating materials to project site ahead of installation time.

3. Complete installation and concealment of plastic materials as rapidly as possible in each area of construction.

PART 2 - PRODUCTS

2.1 MANUFACTURERS

A. Available Manufacturers:
Subject to compliance with requirements, manufacturers offering insulation products that may be incorporated in the work include, but are not limited to, the following:

1. Manufacturers of Glass Fiber Insulation:

a. CertainTeed Corp.

b. Knauf Fiber Glass GmbH.

c. Manville: Building Insulations Div., Manville Sales Corp.

d. Owens/Corning Fiberglas Corp.

2.2 INSULATING MATERIALS

A. General:
Provide insulating materials that comply with requirements and with referenced standards.

1. Preformed Units: Sizes to fit applications indicated, selected from manufacturer's standard thicknesses, widths, and lengths.

B. Un-faced Mineral Fiber Blanket/Batt Insulation (07210.Al):
Thermal insulation produced by combining mineral fibers of type described below with thermosetting resins to comply with ASTM C 665 for Type I (blankets without membrane facing); and as follows:

1. Mineral Fiber Type: Fibers manufactured from glass.

2. Surface Burning Characteristics: Maximum flame spread and smoke developed values of 25 and 50, respectively.

C. Faced Mineral Fiber Blanket/Batt Insulation (07210.A2):
Thermal insulation produced by combining mineral fibers of type described below with thermosetting resins to comply with ASTM C 665 for Type III, Class A (blankets with reflective vapor-retarder membrane facing with flame spread of 25 or less); foil-scrim-kraft or foil-scrim-polyethylene vapor-retarder membrane on one face, and as follows:

1. Mineral Fiber Type: Fibers manufactured from glass.

2. Surface Burning Characteristics: Maximum flame spread and smoke developed values of 25 and 50, respectively.

3. Flanged Units: Provide blankets/batts fabricated with facing incorporating 4-inch-wide flanges along their edges for attachment to framing members.

2.3 SAFING INSULATION AND ACCESSORIES

A. Semi-Refractory Fiber Board Safing Insulation (07210.B):
Semi-rigid boards designed for use as a fire stop at openings between edge of slab and exterior wall panels, produced by combining semi-refractory mineral fiber manufactured from slag with thermosetting resin binders to comply with ASTM C 612, Class I and 2; nominal density of 4.0 pcf; passing ASTM E 136 for combustion characteristics; R-value of 4.0 at 75 deg F (23.9 deg C).

B. Caulking Compound:
Material approved by manufacturer of safing insulation for sealing joint between foil backing of safing insulation and edge of concrete floor slab against penetration of smoke.

C. Safing Clips:
Galvanized steel safing clips approved by manufacturer of safing insulation for holding safing insulation in place.

2.4 VAPOR RETARDERS

A. Polyethylene Vapor Retarder (07210.C):
ASTM D 4397, 6.0 mils thick, with a maximum permeance rating of 0.13 perms.

B. Tape for Vapor Retarder:
Pressure sensitive tape of type recommended by vapor retarder manufacturer for sealing joints and penetrations in vapor retarder.

PART 3 - EXECUTION

3.1 EXAMINATION

A. Examine substrates and conditions with Installer present, for compliance with requirements of the Sections in which substrates and related work are specified and to determine if other conditions affecting performance of insulation are satisfactory. Do not proceed with installation of insulation until unsatisfactory conditions have been corrected.

3.2 PREPARATION

A. Clean substrates of substances harmful to insulations or vapor retarders, including removal of projections that might puncture vapor retarders.

B. Close off openings in cavities receiving poured-in-place insulation to prevent the escape of insulation. Provide bronze or stainless-steel screen (inside) where openings must be maintained for drainage or ventilation.

3.3 INSTALLATION, GENERAL

A. Comply with insulation manufacturer's instructions applicable to products and application indicated. If printed instructions are not available or do not apply to project conditions, consult manufacturer's technical representative for specific recommendations before proceeding with installation of insulation.

B. Extend insulation full thickness as indicated to envelop entire area to be insulated. Cut and fit tightly around obstructions, and fill voids with insulation. Remove projections that interfere with placement.

C. Apply a single layer of insulation of required thickness, unless otherwise shown or required to make up total thickness.

3.4 INSTALLATION OF GENERAL BUILDING INSULATION (07210.A)

A. Apply insulation units to substrate by method indicated, complying with manufacturer's recommendations. If no specific method is indicated, bond units to substrate with adhesive or use mechanical anchorage to provide permanent placement and support of units.

B. Seal joints between closed-cell (non-breathing) insulation units by applying adhesive, mastic, or sealant to edges of each unit to form a tight seal as units are shoved into place. Fill voids in completed installation with adhesive, mastic, or sealant as recommended by insulation manufacturer.

C. Set vapor retarder faced units with vapor retarder to warm side of construction, except as otherwise indicated. Do not obstruct ventilation spaces, except for fire stopping.

1. Tape joints and ruptures in vapor retarder and seal each continuous area of insulation to surrounding construction to ensure airtight installation.

D. Set reflective, foil-faced units accurately with not less than 0.75-inch air space in front of foil as indicated.

3.5 INSTALLATION OF SAFING INSULATION (07210.B)

A. Install safing insulation to fill gap between edge of concrete floor slab and back of exterior spandrel panels on safing clips spaced as needed to support insulation but not further apart then 24 inches O.C. Cut safing insulation wider than gap to be filled to ensure compression fit and seal joint between insulation and edge of slab with calking approved by safing insulation manufacturer for this purpose. Leave no voids in completed installation.

3.6 INSTALLATION OF PERIMETER AND UNDER-SLAB VAPOR RETARDER (07210.CL)

A. On vertical surfaces, set units in adhesive applied in accordance with manufacturer's instructions. Use type of adhesive recommended by manufacturer of vapor retarder.

B. Protect below-grade vapor retarder on vertical surfaces. Set in adhesive in accordance with recommendations of manufacturer of insulation.

3.7 INSTALLATION OF VAPOR RETARDERS IN EXTERIOR WALL (07210.C2)

A. General:

Extend vapor retarder to extremities of areas to be protected from vapor transmission. Secure in place with adhesives or other anchorage system as indicated. Extend vapor retarder to cover miscellaneous voids in insulated substrates, including those filled with loose fiber insulation.

B. Seal vertical joints in vapor retarders over framing by lapping not less than 2 wall studs. Fasten vapor retarders to framing at top, end, and bottom edges, at perimeter of wall openings, and at lap joints; space fasteners 16 inches O.C.

C. Seal overlapping joints in vapor retarders with adhesives or tape per vapor retarder manufacturer's printed directions. Seal butt joints and fastener penetrations with tape of type recommended by vapor retarder manufacturer. Locate all joints over framing members or other solid substrates.

D. Firmly attach vapor retarders to substrates with mechanical fasteners or adhesives as recommended by vapor retarder manufacturer.

E. Seal joints caused by pipes, conduits, electrical boxes, and similar items penetrating vapor retarders with tape of type recommended by vapor retarder manufacturer to create an airtight seal between penetrating objects and vapor retarder.

F. Repair any tears or punctures in vapor retarders immediately before concealment by other work. Cover with tape or another layer of vapor retarder.

3.8 PROTECTION

A. General:

Protect installed insulation and vapor retarders from damage due to harmful weather exposures, physical abuse, and other causes. Provide temporary coverings or enclosures where insulation will be subject to abuse and cannot be concealed and protected by permanent construction immediately after installation.

END OF SECTION

PART 1 - GENERAL

1.1 SUMMARY

A. Section Includes:

1. The sealing of interior joints including:

a. Joints around perimeter of frame.

1.2 REFERENCES

A. ASTM C 719-93 - Standard Test Method for Adhesion and Cohesion of Elastomeric Joint Sealants Under Cyclic Movement (Hockman Cycle); 1993.

B. ASTM C 834-95- Standard Specification for Latex Sealants; 1995.

C. ASTM C 920-95- Standard Specifications for Elastomeric Joints Sealants 1995.

D. ASTM C 1193-91- Standard Guide for Use of Joint Sealants; 1991.

E. FS A-A-272- Caulking Compounds; 1980.

1.3 DEFINITIONS

A. Substrates:

1. M-type substrates:
Concrete, concrete masonry units, brick, mortar and natural stone. The term "masonry" means brick, stone, and concrete masonry work.

2. A-type substrates:
Metals, porcelain, glazed tile, and smooth plastics

3. 0-type substrates:
Woods, unglazed tile; substrates not included under other categories

1.4 SUBMITTALS

A. Product Data:

1. Manufacturer's data on each joint sealer, with instruction for substrate preparation and installation.

B. Certified Product Test Reports:

1. Independent testing agency reports showing compliance with all specified requirements.

2. Reports may be on tests conducted up to 24 months before submission, provided the products tested were aged specimens of the same formulation as that to be used.

C. Field Installation Test Reports.

D. Certificates:
For each sealer, provide manufacturer's certificates stating that the product complies with the specifications and is appropriate for the use it is being put to.

E. Installer's Preconstruction Inspection Report:
List all conditions detrimental to performance of joint sealer work.

1.5 QUALITY ASSURANCE

A. Field Installation Tests:
Before installation, test the adhesion of all sealers to actual substrates.

1. Seal at least 5-foot lengths of joints and cure properly. Try to pull sealer out of joint by hand, by method recommended by sealer manufacturer.

2. Select test joint representative of joints to be sealed by the product to be tested.

3. Perform tests for each type of sealer used on exterior and each type of elastomeric sealant used on interior.

4. Do tests in the presence of the Project Manager.

1.6 DELIVERY, STORAGE, AND HANDLING

A. Deliver materials in original containers or bundles with labels showing manufacturer, product name or designation, color, shelf life, and installation instructions.

1.7 PROJECT CONDITIONS

A. Environmental Limitations:
Do not install sealers if any of the following conditions exist.

1. Air or substrate temperature exceeds the range recommended by sealer manufacturers.

2. Substrate is wet or damp.

B. Dimensional Limitations:
Do not install sealers if joint dimensions are less than or greater than that recommended by sealer manufacturer; notify alternative procedures.

1.8 WARRANTY

A. Submit written warranty signed by Contractor and installer guaranteeing correct failures in sealer work that occur within 10 years after substantial completion, without reducing or otherwise limiting any other rights to correction which the owner may have under the contract documents. Failure is defined as failure to remain weathertight due to faulty materials or workmanship. Correction is limited to replacement sealers.

PART 2 - PRODUCTS

2.1 MATERIALS - GENERAL

A. General:
Provide only products which are recommended and approved by their manufacturer for the specific use to which they are put and which comply with all requirements of the contract documents.

1. For each generic product, use only materials from one manufacturer.

2. Provide only materials which are compatible with each other and joint substrates.

3. Colors of exposed sealers:
As selected by the Owner's Representative from manufacturer's standard colors

2.2 ELASTOMERIC SEALANTS

A. Elastomeric Sealants General:
Chemically curing elastomeric sealants types indicated, complying with ASTM C 920, including specific type, Grade, Class, and Uses indicated, as well as all other requirements specified.

1. For M-type substrates:
Comply with requirements for Use M

2. For G-type substrates:
Comply with requirements for Use G

3. For A-type substrates:
Comply with requirements for Use A

B. Silicone Sealant for Use T:
One-part, non-acid-curing, Grade NS, Class 25, Use T, Use M, plus movement capability of 50 percent in both extension and compression.

C. No sag Urethane Sealant for Use T: Type S or M, Grade NS, Class 25, Use T

D. One-part No sag Urethane Sealant: Type S, Grade P, Class 25, Use T

2.3 SEALANT BACKERS

A. Backers- General:
No staining; recommended or approved by sealant manufacturer for specific use.

B. Backers Rods:
Flexible, nonabsorbent, compressible polyurethane foam either open-cell or non-gassing closed-cell, unless otherwise restricted by sealant manufacturer; preformed to appropriate size and shape.

2.4 MISCELLANEOUS MATERIALS

A. Primers:

As recommended by sealer manufacturer.

B. Cleaners:
As recommended by sealer manufacturer and not damaging to substrates.

C. Masking Tape:
Nonabsorbent, no staining.

D. Tooling Agents:
Approved by sealant manufacturer; no staining to sealant and substrate.

PART 3 - EXECUTION

3.1 EXAMINATION

A. Examine joints for characteristics that may affect sealer performance including configuration and dimensions.

B. Do not begin joint sealer work until unsatisfactory conditions have corrected.

3.2 PREPARATION

A. Cleaning:
Just before starting sealer installation, clean out joints accord with recommendations of sealer manufacturers and as follows:

1. Remove all material that could impair adhesion, including dust, dirt, coatings, paint, oil, and grease. Exception: Materials tested to show acceptable adhesion and compatibility.

2. Dry out damp and wet substrates thoroughly.

3. Clean M-type and 0-type substrates by suitable mechanical or chemical methods.

4. Remove loose particles by vacuuming or by blowing with oil-free compressed air.

5. Concrete: Remove laitance and form-release coatings.

6. Clean A-type and G-type substrates by chemical or other method which will not damage the substrate.

7. Use methods which will not leave residues that will impair adhesion.

B. Priming:
Prime substrates as recommended by sealer manufacturer.

C. Marking Tape:
Use masking tape to keep primers and sealers off of adjacent surfaces which would be damaged by contact or by cleanup. Remove tape as soon as practical.

D. Install fillers where needed to provide proper joint depth or support for sealant backers.

3.3 INSTALLATION

A. Comply with sealer manufacturers' installation instructions and recommendations, except where more restrictive requirements are specified.

B. Gun Applied and Pourable Sealants:
Comply with recommendations of ASTM C 1193.

C. Backers:
Install backers at depth required to result in shape and depth of installed sealant which allows the most joint movement without failure.

1. Make backers continuous, without gaps, tears, or punctures. Do not stretch or twist backers.

D. Sealants:
Use methods recommended by manufacturer; completely fill the joint; make full contact with bond surfaces; tool no sag sealants to smooth surface eliminating air pockets.

1. Use concave joint shape shown in Figure 5A in ASTM C 1193, where not otherwise indicated.

3.4 PROTECTION AND CLEANING

A. Cleaning surfaces adjacent to joints as work progresses and before sealants set using methods and materials approved by manufacturers of sealers and of surfaces to be cleaned.

B. Protect joint sealers from contamination and damage.

C. Remove and replace damage sealers.

D. General:
Unless otherwise indicated, joints around perimeter of frames, where indicated to be sealed, are to be sealed using sealer specified for the substrate to the frame.

E. Exterior Joints for Which No Other Sealer Is Indicated:

1. Use one of the following sealants:

b. Medium movement silicone sealant

c. One-part no sag urethane sealant

d. One-part no sag low-modulus urethane sealant

2. Backer: Backer rod

3. Joint shape: Concave joint configuration

END OF SECTION

PART 1 - GENERAL

1.1 RELATED DOCUMENTS

A. Drawings and general provisions of the Contract, including General and Supplementary Conditions and Division 1 Specification Sections, apply to this Section.

1.2 SUMMARY

A. This Section includes steel frames.

B. Related Sections:
The following Sections contain requirements that relate to this Section:

1. Division 8 Section “Flush Wood Doors” for hollow-core and solid-core wood doors installed in steel frames

2. Division 8 Section "Door Hardware" for door hardware and weather-stripping

3. Division 9 Section “Gypsum Board Assemblies" for spot grouting frames in gypsum board partitions

4. Division 9 Section "Painting" for field painting primed doors and frames

1.3 SUBMITTALS

A. General:
Submit each item in this Article according to the Conditions of the Contract and Division 1 Specification Sections.

B. Product Data for each type of frame specified, including details of construction, materials, dimensions, hardware preparation, core, label compliance, sound ratings, profiles, and finishes.

C. Shop Drawings showing fabrication and installation of steel frames. Include details of each frame type, elevations of door design types, conditions at openings, details of construction, location and installation requirements of door and frame hardware and reinforcements, and details of joints and connections. Show anchorage and accessory items.

D. Door Schedule:
Submit schedule of frames using same reference numbers for details and openings as those on Contract Drawings.

1. Indicate coordination of glazing frames and stops with glass and glazing requirements.

1.4 QUALITY ASSURANCE

A. Provide doors and frames complying with ANSI/SDI 100 "Recommended Specifications for Standard Steel Doors and Frames" and as specified.

B. Fire-Rated Door Assemblies:

Units that comply with NFPA 80, are identical to door and frame assemblies tested for fire-test-response characteristics per ASTM E !52, and are labeled and listed by UL, Warnock Hersey, or another testing and inspecting agency acceptable to authorities having jurisdiction.

1. Oversize Fire-Rated Door Assemblies:
   For units exceeding sizes of tested assemblies, provide certification by a testing agency acceptable to authorities having jurisdiction that doors conform to all standard construction requirements of tested and labeled fire-rated door assemblies except for size.

2. Temperature-Rise Rating:
   Where indicated, provide doors that have a temperature-rise rating of 450 deg F (250 deg C) maximum in 30 minutes of fire exposure.

1.5 DELIVERY, STORAGE, AND HANDLING

A. Deliver frames cardboard-wrapped or crated to provide protection during transit and job storage. Provide additional protection to prevent damage to finish of factory-finished frames.

B. Inspect frames on delivery for damage. Minor damages may be repaired provided refinished items match new work and are acceptable to Owner's Representative; otherwise, remove and replace damaged items as directed.

C. Store frames at building site under cover. Place units on minimum 4-inch (100-mm-) high wood blocking. Avoid using non-vented plastic or canvas shelters that could create a humidity chamber. If cardboard wrappers on doors become wet, remove cartons immediately. Provide minimum 1/4-inch (6- mm) spaces between stacked units to promote air circulation.

PART 2 - PRODUCTS

2.1 MANUFACTURERS

A. Available Manufacturers:
   Subject to compliance with requirements, manufacturers offering products that may be incorporated in the Work include, but are not limited to, the following:

1. Steel Frames:

   a. Amweld Building Products, Inc.

   b. Benchmark Commercial Doors.

   c. Ceco Door Products.

   d. Copco Door Co.

   e. Curries Co.

   f. Deansteel Manufacturing Co.

g. Fenestra Corp.

h. Kewanee Corp.

i. Mesker Door, Inc.

j. Pioneer Industries.

k. Republic Builders Products.

l. Steelcraft.

2.2 MATERIALS

A. Hot-Rolled Steel Sheets and Strip:
Commercial-quality carbon steel, pickled and oiled, complying with ASTM A 569 (ASTM A 569M).

B. Cold-Rolled Steel Sheets:
Carbon steel complying with ASTM A 366 (ASTM A 366M), commercial quality, or ASTM A 620 (ASTM A 620M), drawing quality, special kilned.

C. Galvanized Steel Sheets:
Zinc-coated carbon steel complying with ASTM A 526 (ASTM A 526M), commercial quality, or ASTM A 642 (ASTM A 642M), drawing quality, hot-dip galvanized according to ASTM A 525, with A 60 or G 60 (ASTM A 525M, with Z 180 or ZF 180) coating designation, mill phosphatized.

D. Supports and Anchors:
Fabricated from not less than 0.0478-inch (1.2-mm) thick steel sheet; 0.0516 inch (1.3 mm) thick galvanized steel where used with galvanized steel frames.

E. Inserts, Bolts, and Fasteners:
Manufacturer's standard units. Where items are to be built into exterior walls, Type 305 or 316 stainless steel. Do not use hardened 410 stainless steel fasteners.

2.3 FRAMES

A. Provide metal frames for doors, transoms, sidelights, borrowed lights, and other openings, according to ANSI/SDI 100, and of types and styles as shown on Drawings and schedules. Conceal fastenings, unless otherwise indicated. Fabricate frames of minimum 0.0478-inch (1.2-mm-) thick cold-rolled steel sheet.

1. Fabricate frames with mitered or coped and continuously welded corners.

2. Fabricate frames for interior openings over 48 inches (1220 mm) wide from 0.0598-inch (1.5- mm-) thick steel sheet.

3. Form exterior frames from 0.0785-inch (2.0-mm-) thick galvanized steel sheet.

B. Door Silencers:
Except on weather-stripped frames, drill stops to receive 3 silencers on strike jambs of single-door frames and 2 silencers on heads of double-door frames.

C. Plaster Guards:
Provide minimum 0.0179-inch (0.45-mm) thick steel plaster guards or mortar boxes at back of hardware cutouts where mortar or other materials might obstruct hardware operation and to close off interior of openings.

2.4 FABRICATION

A. Fabricate steel frame units to be rigid, neat in appearance, and free from defects, warp, or buckle. Where practical, fit and assemble units in manufacturer's plant. Clearly identify work that cannot be permanently factory assembled before shipment, to assure proper assembly at Project site. Comply with ANSI/SDI 100 requirements.

B. Fabricate exposed faces of panels, including stiles and rails of not flush units, from only cold-rolled steel sheet.

C. Tolerances: Comply with SDI 117 "Manufacturing Tolerances Standard Steel Doors and Frames."

D. Fabricate concealed stiffeners, reinforcement, edge channels, louvers, and moldings from either cold- or hot-rolled steel sheet.

E. Galvanized Steel Panels, and Frames:
For the following locations, fabricate panels, and frames from galvanized steel sheet according to SDI 112.

1. At exterior locations

D. Exposed Fasteners:
Unless otherwise indicated, provide countersunk flat or oval heads for exposed screws and bolts.

E. Hardware Preparation:
Prepare frames to receive mortised and concealed hardware according to final door hardware schedule and templates provided by hardware supplier. Comply with applicable requirements of SDI 107 and ANSI A115 Series specifications for door and frame preparation for hardware.

1. For concealed overhead door closers, provide space, cutouts, reinforcing, and provisions for fastening in top rail of doors or head of frames, as applicable.

F. Reinforce frames to receive surface-applied hardware. Drilling and tapping for surface-applied hardware may be done at Project site.

G. Locate hardware as indicated on Shop Drawings or, if not indicated, according to the Door and Hardware Institute's (DHI) "Recommended Locations for Architectural Hardware for Standard Steel Doors and Frames."

H. Glazing Stops: Minimum 0.0359 inch (0.9 mm) thick steel or 0.040 inch (l mm) thick aluminum.

1. Provide non-removable stops on secure side of interior frames for glass, louvers, and other panels in frames.

2. Provide screw applied, removable, glazing beads on inside of glass, louvers, and other panels in doors.

2.5 FINISHES, GENERAL

A. Comply with NAAMM's "Metal Finishes Manual" for recommendations relative to applying and designating finishes.

B. Comply with SSPC-PA 1, "Paint Application Specification No. 1," for steel sheet finishes.

C. Apply primers and organic finishes to frames after fabrication.

2.6 GALVANIZED STEEL SHEET FINISHES

A. Surface Preparation:
Clean surfaces with nonpetroleum solvent so that surfaces are free of oil or other contaminants. After cleaning, apply a conversion coating of the type suited to the organic coating applied over it. Clean welds, mechanical connections, and abraded areas, and apply galvanizing repair paint specified below to comply with ASTM A 780.

1. Galvanizing Repair Paint:
High-zinc-dust-content paint for galvanizing welds in galvanized steel, with dry film containing not less than 94 percent zinc dust by weight and complying with DOD-P-21035 or SSPC-Paint 20.

B. Factory Priming for Field-Painted Finish: Where field painting after installation is indicated, apply air-dried primer specified below immediately after cleaning and pretreatment.

1. Shop Primer: Zinc dust, zinc-oxide primer paint complying with performance requirements of FS TT-P-641, Type II.

2.7 STEEL SHEET FINISHES

A. Surface Preparation:
Solvent-clean surfaces to comply with SSPC-SP 1 to remove dirt, oil, grease, and other contaminants that could impair paint bond. Remove mill scale and rust, if present, from uncoated steel to comply with SSPC-SP 5 (White Metal Blast Cleaning) or SSPC-SP 8 (Pickling).

B. Pretreatment:
Immediately after surface preparation, apply a conversion coating of type suited to organic coating applied over it.

C. Factory Priming for Field Painted Finish:

Apply shop primer that complies with ANSI A224.1 acceptance criteria, is compatible with finish paint systems indicated, and has capability to provide a sound foundation for field-applied topcoats. Apply primer immediately after surface preparation and pretreatment.

PART 3 - EXECUTION

3.1 INSTALLATION

A. General:
Install steel frames, and accessories according to Shop Drawings, manufacturer's data, and as specified.

B. Placing Frames:
Comply with provisions of SDI 105, unless otherwise indicated. Set frames accurately in position, plumbed, aligned, and braced securely until permanent anchors are set. After wall construction is completed, remove temporary braces and spreaders, leaving surfaces smooth and undamaged.

1. Except for frames located in existing concrete, masonry, or gypsum board assembly construction, place frames before constructing enclosing walls and ceilings.

2. In metal-stud partitions, install at least 3 wall anchors per jamb at hinge and strike levels. In steel stud partitions, attach wall anchors to studs with screws.

3. In in-place gypsum board partitions, install knock-down, slip-on, drywall frames.

4. Install fire-rated frames according to NFPA 80.

3.2 ADJUSTING AND CLEANING

A. Prime Coat Touchup:
Immediately after erection, sand smooth any rusted or damaged areas of prime coat and apply touchup of compatible air-drying primer.

B. Protection Removal:
Immediately before final inspection, remove protective wrappings from frames.

END OF SECTION

PART 1 - GENERAL

1.1 SUMMARY

A. Section Includes:

1. Standard steel doors.

2. Prefinished doors.

B. Related Sections:

1. Anchoring and grouting frames in masonry: Division 4.

2. Wood doors for installation in steel frames: Elsewhere in Division 8.

3. Door hardware: Elsewhere in Division 8.

4. Glass and Glazing: Elsewhere in Division 8.

5. Standard Steel Frames: Elsewhere in Division 8.

1.2 REFERENCES

A. ASTM A 366/A 366M-96 -- Standard Specification for Steel, Sheet, Carbon, Cold-Rolled, Commercial Quality; 1996.

B. ASTM A 525-93 - Standard Specification for General Requirements for Steel Sheet, Zinc-Coated (Galvanized) by the Hot-Dip Process; 1993.

C. ASTM A 526/A 526M-90 - Standard Specification for Steel Sheet, Zinc- Coated (Galvanized) by the Hot-Dip Process, Commercial Quality; 1990.

D. ASTM A 568/A 568M-95 - Standard Specification for Steel, Sheet, Carbon, and High-Strength, Low-Alloy, Hot-Rolled and Cold-Rolled, General Requirements for; 1995.

E. ASTM A 569/A 569M-9Ia - Standard Specification for Steel, Carbon (0.15 Maximum, Percent), Hot-Rolled Sheet and Strip Commercial Quality; 199I.

F. DHI A115 Series - Specifications for Steel Door and Frame Preparation for Hardware; 1980-94.

G. SDI 100-1991 - Recommended Specifications: Standard Steel Doors and Frames; Steel Door Institute; 1991.

1.3 SUBMITTALS

A. Product Data:
Submit manufacturer's printed product information indicating compliance with specified requirements.

B. Shop Drawings:
Submit drawings for fabrication and installation of standard steel doors, including the following information:

1. Details of construction, joints, and connections

2. Elevations of each opening type

3. Conditions at openings, including coordination with glass and glazing requirements

4. Location and installation requirements of door hardware and reinforcements

5. Schedule of openings coordinated with numbering system used in contract documents

C. Selection Samples: Submit manufacturer's complete range of colors.

D. Verification Samples:
Submit painted metal samples, not less than 6 inches in least dimension, for each color selected for factory-finished work.

E. Quality Assurance Certification:
Submit manufacturer's certification that products have been constructed and tested in full compliance with ANSI/SDI 100. As applicable, include test reports for core construction and reinforcing methods not specifically designated as acceptable by ANSI/SDI 100.

1.4 QUALITY ASSURANCE

A. Quality Standard: Comply with SDI 100.

1.5 DELIVERY, STORAGE, AND HANDLING

A. Deliver products in crates or cartons suitable for storage at the site.

B. Protect prefinished doors with additional plastic wrapping sealed to exclude moisture.

C. Replace items damaged in delivery, unless damage is minor and can be repaired to match intact items, as determined by Owner's Representative.

D. Store products under cover, raised above ground level, and stacked to prevent warping and to promote air circulation.

E. Prevent moisture from accumulating and remove saturated packaging before products can be damaged.

PART 2 - PRODUCTS

2.1 MATERIALS

A. Steel Sheets, Hot-Rolled: ASTM A 569 and ASTM A 568, commercial quality, pickled and oiled.

B. Steel Sheets, Cold-Rolled: ASTM A 366 and ASTM A 568, commercial quality, matte finish exposed, oiled.

C. Steel Sheets, Galvanized:

D. ASTM A 526 and ASTM A 525, commercial quality, A60 zinc-iron or G90 zinc coating, mill phosphatized.

E. Fasteners and Inserts: Units standard with manufacturer.

F. Paint:

1. Primer: Manufacturer's standard rust-inhibitive coating, suitable to receive finish coatings specified.

2. Finish coating: Manufacturer's standard baked-on enamel, epoxy, or urethane.

2.2 FABRICATION

A. General:
Shop-fabricate assemblies to greatest extent possible, assuring that installed units will be without warp, twist, bow, or other defect in appearance or function.

B. Exposed Door Faces: Fabricate from cold-rolled steel.

C. Edge Channels, Stiffeners, and Reinforcement: Fabricate from cold-rolled or hot-rolled steel.

D. Exterior Doors: Fabricate from hot-dip galvanized steel.

E. Seal top and bottom edges integrally with door construction or use minimum 16 gage steel channels to form flush closure.

F. Exposed Screws and Bolts: Where required, provide only countersunk, flat stainless-steel Phillips-head fasteners.

G. Hardware Preparation:
Comply with DHI A115 series specifications for door preparation, using final hardware schedule and templates from hardware supplier.

1. Reinforcement: Reinforce doors for field-installed exposed hardware items.

2. Locations: Comply with final shop drawings.

H. Shop Painting:

1. Preparation:
Clean surfaces thoroughly before beginning painting operations, removing rust, scale, oil, grease, and other contaminants.

2. Primer: Apply primer evenly to achieve full protection of all exposed surfaces.

3. Finish:
   Spray scheduled doors electrostatically with finish coating to achieve smooth even coverage and nominal final thickness of 1.25 mils; bake as required to achieve durable finish.

2.3 STEEL DOORS

A. General: Fabricate steel doors in accordance with requirements of SDI 100.

1. Exterior Doors: Grade III, Extra Heavy-Duty, Model 2-Seamless

PART 3 - EXECUTION

3.1 INSTALLATION

A. General:
   Install steel doors to comply with manufacturer's recommendations.

1. Comply with detailed installation requirements of final shop drawings.

2. Where vision panels are indicated, provide glazing area 7-112" x 36", unless specifically shown otherwise on the drawings.

B. Door Installation:
   General: Comply with requirements and clearances specified in SDI 100.

3.2 ADJUST AND CLEAN

A. Touch-Up:
   At locations where primer has been abraded or minor rusting has occurred, sand smooth and spray apply compatible primer.

B. Prefinished Doors:
   Remove protective coverings from installed doors immediately prior to final inspection; clean up debris and remove from site.

C. Final Operating Adjustments:
   Check hardware at all openings for proper operation of doors, making final corrections as required to assure that work of this section is complete and undamaged.

END OF SECTION

PART 1 - GENERAL

1.1 RELATED DOCUMENTS

A. Drawings and general provisions of the Contract, including General and Supplementary Conditions and Division 1 Specification Sections, apply to this Section.

1.2 SUMMARY

A. This Section includes steel frames.

B. Related Sections:
The following Sections contain requirements that relate to this Section:

1. Division 8 Section “Flush Wood Doors” for hollow-core and solid-core wood doors installed in steel frames

2. Division 8 Section "Door Hardware" for door hardware and weather-stripping

3. Division 9 Section “Gypsum Board Assemblies" for spot grouting frames in gypsum board partitions

4. Division 9 Section "Painting" for field painting primed doors and frames

1.3 SUBMITTALS

A. General:
Submit each item in this Article according to the Conditions of the Contract and Division I Specification Sections.

B. Product Data for each type of frame specified, including details of construction, materials, dimensions, hardware preparation, core, label compliance, sound ratings, profiles, and finishes.

C. Shop Drawings showing fabrication and installation of steel frames. Include details of each frame type, elevations of door design types, conditions at openings, details of construction, location and installation requirements of door and frame hardware and reinforcements, and details of joints and connections. Show anchorage and accessory items.

D. Door Schedule:
Submit schedule of frames using same reference numbers for details and openings as those on Contract Drawings.

1. Indicate coordination of glazing frames and stops with glass and glazing requirements.

1.4 QUALITY ASSURANCE

A. Provide doors and frames complying with ANSI/SDI 100 "Recommended Specifications for Standard Steel Doors and Frames" and as specified.

B. Fire-Rated Door Assemblies:

Units that comply with NFPA 80, are identical to door and frame assemblies tested for fire-test-response characteristics per ASTM E !52, and are labeled and listed by UL, Warnock Hersey, or another testing and inspecting agency acceptable to authorities having jurisdiction.

1. Oversize Fire-Rated Door Assemblies:
For units exceeding sizes of tested assemblies, provide certification by a testing agency acceptable to authorities having jurisdiction that doors conform to all standard construction requirements of tested and labeled fire-rated door assemblies except for size.

2. Temperature-Rise Rating:
Where indicated, provide doors that have a temperature-rise rating of 450 deg F (250 deg C) maximum in 30 minutes of fire exposure.

1.5 DELIVERY, STORAGE, AND HANDLING

A. Deliver frames cardboard-wrapped or crated to provide protection during transit and job storage. Provide additional protection to prevent damage to finish of factory-finished frames.

B. Inspect frames on delivery for damage. Minor damages may be repaired provided refinished items match new work and are acceptable to Owner's Representative; otherwise, remove and replace damaged items as directed.

C. Store frames at building site under cover. Place units on minimum 4-inch (100-mm-) high wood blocking. Avoid using non-vented plastic or canvas shelters that could create a humidity chamber. If cardboard wrappers on doors become wet, remove cartons immediately. Provide minimum 1/4-inch (6- mm) spaces between stacked units to promote air circulation.

PART 2 - PRODUCTS

2.1 MANUFACTURERS

A. Available Manufacturers:
Subject to compliance with requirements, manufacturers offering products that may be incorporated in the Work include, but are not limited to, the following:

1. Steel Frames:

a. Amweld Building Products, Inc.

b. Benchmark Commercial Doors.

c. Ceco Door Products.

d. Copco Door Co.

e. Curries Co.

f. Deansteel Manufacturing Co.

g. Fenestra Corp.

h. Kewanee Corp.

i. Mesker Door, Inc.

j. Pioneer Industries.

k. Republic Builders Products.

l. Steelcraft.

2.2 MATERIALS

A. Hot-Rolled Steel Sheets and Strip:
Commercial-quality carbon steel, pickled and oiled, complying with ASTM A 569 (ASTM A 569M).

B. Cold-Rolled Steel Sheets:
Carbon steel complying with ASTM A 366 (ASTM A 366M), commercial quality, or ASTM A 620 (ASTM A 620M), drawing quality, special kilned.

C. Galvanized Steel Sheets:
Zinc-coated carbon steel complying with ASTM A 526 (ASTM A 526M), commercial quality, or ASTM A 642 (ASTM A 642M), drawing quality, hot-dip galvanized according to ASTM A 525, with A 60 or G 60 (ASTM A 525M, with Z 180 or ZF 180) coating designation, mill phosphatized.

D. Supports and Anchors:
Fabricated from not less than 0.0478-inch (1.2-mm) thick steel sheet; 0.0516 inch (1.3 mm) thick galvanized steel where used with galvanized steel frames.

E. Inserts, Bolts, and Fasteners:
Manufacturer's standard units. Where items are to be built into exterior walls, Type 305 or 316 stainless steel. Do not use hardened 410 stainless steel fasteners.

2.3 FRAMES

A. Provide metal frames for doors, transoms, sidelights, borrowed lights, and other openings, according to ANSI/SDI 100, and of types and styles as shown on Drawings and schedules. Conceal fastenings, unless otherwise indicated. Fabricate frames of minimum 0.0478-inch (1.2-mm-) thick cold-rolled steel sheet.

1. Fabricate frames with mitered or coped and continuously welded corners.

2. Fabricate frames for interior openings over 48 inches (1220 mm) wide from 0.0598-inch (1.5- mm-) thick steel sheet.

3. Form exterior frames from 0.0785-inch (2.0-mm-) thick galvanized steel sheet.

B. Door Silencers:
Except on weather-stripped frames, drill stops to receive 3 silencers on strike jambs of single-door frames and 2 silencers on heads of double-door frames.

C. Plaster Guards:
Provide minimum 0.0179-inch (0.45-mm) thick steel plaster guards or mortar boxes at back of hardware cutouts where mortar or other materials might obstruct hardware operation and to close off interior of openings.

2.4 FABRICATION

A. Fabricate steel frame units to be rigid, neat in appearance, and free from defects, warp, or buckle. Where practical, fit and assemble units in manufacturer's plant. Clearly identify work that cannot be permanently factory assembled before shipment, to assure proper assembly at Project site. Comply with ANSI/SDI 100 requirements.

B. Fabricate exposed faces of panels, including stiles and rails of not flush units, from only cold-rolled steel sheet.

C. Tolerances: Comply with SDI 117 "Manufacturing Tolerances Standard Steel Doors and Frames."

D. Fabricate concealed stiffeners, reinforcement, edge channels, louvers, and moldings from either cold- or hot-rolled steel sheet.

E. Galvanized Steel Panels, and Frames:
For the following locations, fabricate panels, and frames from galvanized steel sheet according to SDI 112.

1. At exterior locations

F. Exposed Fasteners:
Unless otherwise indicated, provide countersunk flat or oval heads for exposed screws and bolts.

G. Hardware Preparation:
Prepare frames to receive mortised and concealed hardware according to final door hardware schedule and templates provided by hardware supplier. Comply with applicable requirements of SDI 107 and ANSI A115 Series specifications for door and frame preparation for hardware.

1. For concealed overhead door closers, provide space, cutouts, reinforcing, and provisions for fastening in top rail of doors or head of frames, as applicable.

H. Reinforce frames to receive surface-applied hardware. Drilling and tapping for surface-applied hardware may be done at Project site.

I. Locate hardware as indicated on Shop Drawings or, if not indicated, according to the Door and Hardware Institute's (DHI) "Recommended Locations for Architectural Hardware for Standard Steel Doors and Frames."

J. Glazing Stops: Minimum 0.0359 inch (0.9 mm) thick steel or 0.040 inch (l mm) thick aluminum.

1. Provide non-removable stops on secure side of interior frames for glass, louvers, and other panels in frames.

2. Provide screw applied, removable, glazing beads on inside of glass, louvers, and other panels in doors.

2.5 FINISHES, GENERAL

A. Comply with NAAMM's "Metal Finishes Manual" for recommendations relative to applying and designating finishes.

B. Comply with SSPC-PA 1, "Paint Application Specification No. 1," for steel sheet finishes.

C. Apply primers and organic finishes to frames after fabrication.

2.6 GALVANIZED STEEL SHEET FINISHES

A. Surface Preparation:
Clean surfaces with nonpetroleum solvent so that surfaces are free of oil or other contaminants. After cleaning, apply a conversion coating of the type suited to the organic coating applied over it. Clean welds, mechanical connections, and abraded areas, and apply galvanizing repair paint specified below to comply with ASTM A 780.

1. Galvanizing Repair Paint:
High-zinc-dust-content paint for galvanizing welds in galvanized steel, with dry film containing not less than 94 percent zinc dust by weight and complying with DOD-P-21035 or SSPC-Paint 20.

B. Factory Priming for Field-Painted Finish: Where field painting after installation is indicated, apply air-dried primer specified below immediately after cleaning and pretreatment.

1. Shop Primer: Zinc dust, zinc-oxide primer paint complying with performance requirements of FS TT-P-641, Type II.

2.7 STEEL SHEET FINISHES

A. Surface Preparation:
Solvent-clean surfaces to comply with SSPC-SP 1 to remove dirt, oil, grease, and other contaminants that could impair paint bond. Remove mill scale and rust, if present, from uncoated steel to comply with SSPC-SP 5 (White Metal Blast Cleaning) or SSPC-SP 8 (Pickling).

B. Pretreatment:
Immediately after surface preparation, apply a conversion coating of type suited to organic coating applied over it.

C. Factory Priming for Field Painted Finish:
Apply shop primer that complies with ANSI A224.1 acceptance criteria, is compatible with finish paint systems indicated, and has capability to provide a sound foundation for field-applied topcoats. Apply primer immediately after surface preparation and pretreatment.

PART 3 - EXECUTION

3.1 INSTALLATION

A. General:
Install steel frames, and accessories according to Shop Drawings, manufacturer's data, and as specified.

B. Placing Frames:
Comply with provisions of SDI 105, unless otherwise indicated. Set frames accurately in position, plumbed, aligned, and braced securely until permanent anchors are set. After wall construction is completed, remove temporary braces and spreaders, leaving surfaces smooth and undamaged.

1. Except for frames located in existing concrete, masonry, or gypsum board assembly construction, place frames before constructing enclosing walls and ceilings.

2. In metal-stud partitions, install at least 3 wall anchors per jamb at hinge and strike levels. In steel stud partitions, attach wall anchors to studs with screws.

3. In in-place gypsum board partitions, install knock-down, slip-on, drywall frames.

4. Install fire-rated frames according to NFPA 80.

3.2 ADJUSTING AND CLEANING

A. Prime Coat Touchup:
Immediately after erection, sand smooth any rusted or damaged areas of prime coat and apply touchup of compatible air-drying primer.

B. Protection Removal:
Immediately before final inspection, remove protective wrappings from frames.

END OF SECTION

PART 1 - GENERAL

1.1 SUMMARY

A. Section Includes:

1. Standard steel doors.

2. Prefinished doors.

B. Related Sections:

1. Anchoring and grouting frames in masonry: Division 4.

2. Wood doors for installation in steel frames: Elsewhere in Division 8.

3. Door hardware: Elsewhere in Division 8.

4. Glass and Glazing: Elsewhere in Division 8.

5. Standard Steel Frames: Elsewhere in Division 8.

1.2 REFERENCES

A. ASTM A 366/A 366M-96 -- Standard Specification for Steel, Sheet, Carbon, Cold-Rolled, Commercial Quality; 1996.

B. ASTM A 525-93 - Standard Specification for General Requirements for Steel Sheet, Zinc-Coated (Galvanized) by the Hot-Dip Process; 1993.

C. ASTM A 526/A 526M-90 - Standard Specification for Steel Sheet, Zinc- Coated (Galvanized) by the Hot-Dip Process, Commercial Quality; 1990.

D. ASTM A 568/A 568M-95 - Standard Specification for Steel, Sheet, Carbon, and High-Strength, Low-Alloy, Hot-Rolled and Cold-Rolled, General Requirements for; 1995.

E. ASTM A 569/A 569M-9Ia - Standard Specification for Steel, Carbon (0.15 Maximum, Percent), Hot-Rolled Sheet and Strip Commercial Quality; 199I.

F. DHI A115 Series - Specifications for Steel Door and Frame Preparation for Hardware; 1980-94.

G. SDI 100-1991 - Recommended Specifications: Standard Steel Doors and Frames; Steel Door Institute; 1991.

1.3 SUBMITTALS

A. Product Data:
Submit manufacturer's printed product information indicating compliance with specified requirements.

B. Shop Drawings:
Submit drawings for fabrication and installation of standard steel doors, including the following information:

1. Details of construction, joints, and connections

2. Elevations of each opening type

3. Conditions at openings, including coordination with glass and glazing requirements

4. Location and installation requirements of door hardware and reinforcements

5. Schedule of openings coordinated with numbering system used in contract documents

C. Selection Samples: Submit manufacturer's complete range of colors.

D. Verification Samples:
Submit painted metal samples, not less than 6 inches in least dimension, for each color selected for factory-finished work.

E. Quality Assurance Certification:
Submit manufacturer's certification that products have been constructed and tested in full compliance with ANSI/SDI 100. As applicable, include test reports for core construction and reinforcing methods not specifically designated as acceptable by ANSI/SDI 100.

1.4 QUALITY ASSURANCE

A. Quality Standard: Comply with SDI 100.

1.5 DELIVERY, STORAGE, AND HANDLING

A. Deliver products in crates or cartons suitable for storage at the site.

B. Protect prefinished doors with additional plastic wrapping sealed to exclude moisture.

C. Replace items damaged in delivery, unless damage is minor and can be repaired to match intact items, as determined by Owner's Representative.

D. Store products under cover, raised above ground level, and stacked to prevent warping and to promote air circulation.

E. Prevent moisture from accumulating and remove saturated packaging before products can be damaged.

PART 2 - PRODUCTS

2.1 MATERIALS

A. Steel Sheets, Hot-Rolled: ASTM A 569 and ASTM A 568, commercial quality, pickled and oiled.

B. Steel Sheets, Cold-Rolled: ASTM A 366 and ASTM A 568, commercial quality, matte finish exposed, oiled.

C. Steel Sheets, Galvanized:
ASTM A 526 and ASTM A 525, commercial quality, A60 zinc-iron or G90 zinc coating, mill phosphatized.

D. Fasteners and Inserts:
Units standard with manufacturer.

E. Paint:

1. Primer: Manufacturer's standard rust-inhibitive coating, suitable to receive finish coatings specified.

2. Finish coating: Manufacturer's standard baked-on enamel, epoxy, or urethane.

2.2 FABRICATION

A. General:
Shop-fabricate assemblies to greatest extent possible, assuring that installed units will be without warp, twist, bow, or other defect in appearance or function.

B. Exposed Door Faces: Fabricate from cold-rolled steel.

C. Edge Channels, Stiffeners, and Reinforcement: Fabricate from cold-rolled or hot-rolled steel.

D. Exterior Doors: Fabricate from hot-dip galvanized steel.

E. Seal top and bottom edges integrally with door construction or use minimum 16 gage steel channels to form flush closure.

F. Exposed Screws and Bolts: Where required, provide only countersunk, flat stainless-steel Phillips-head fasteners.

G. Hardware Preparation:
Comply with DHI A115 series specifications for door preparation, using final hardware schedule and templates from hardware supplier.

1. Reinforcement: Reinforce doors for field-installed exposed hardware items.

2. Locations: Comply with final shop drawings.

H. Shop Painting:

1. Preparation:
Clean surfaces thoroughly before beginning painting operations, removing rust, scale, oil, grease, and other contaminants.

2. Primer: Apply primer evenly to achieve full protection of all exposed surfaces.

3. Finish:
Spray scheduled doors electrostatically with finish coating to achieve smooth even coverage and nominal final thickness of 1.25 mils; bake as required to achieve durable finish.

2.3 STEEL DOORS

A. General: Fabricate steel doors in accordance with requirements of SDI 100.

1. Exterior Doors: Grade III, Extra Heavy-Duty, Model 2-Seamless

PART 3 - EXECUTION

3.1 INSTALLATION

A. General:
Install steel doors to comply with manufacturer's recommendations.

1. Comply with detailed installation requirements of final shop drawings.

2. Where vision panels are indicated, provide glazing area 7-112" x 36", unless specifically shown otherwise on the drawings.

B. Door Installation:
General: Comply with requirements and clearances specified in SDI 100.

3.2 ADJUST AND CLEAN

A. Touch-Up:
At locations where primer has been abraded or minor rusting has occurred, sand smooth and spray apply compatible primer.

B. Prefinished Doors:
Remove protective coverings from installed doors immediately prior to final inspection; clean up debris and remove from site.

C. Final Operating Adjustments:
Check hardware at all openings for proper operation of doors, making final corrections as required to assure that work of this section is complete and undamaged.

END OF SECTION

PART 1 - GENERAL

1.1 RELATED DOCUMENTS

A. Drawings and general provisions of the Contract, including General and Supplementary Conditions and Division 1 Specification Sections, apply to this Section.

1.2 SUMMARY

A. This Section includes the following:

1. Solid-core doors with wood-veneer faces
2. Factory finishing flush wood doors
3. Louvers for flush wood doors

B. Related Sections include the following:

1. Division 8 Section "Steel Frames" for hollow metal frames
2. Division 8 Section "Door Hardware"

1.3 SUBMITTALS

A. Product Data:
For each type of door. Include details of core and edge construction, trim for openings, and louvers.

1. Include factory-finishing specifications.

B. Shop Drawings:
Indicate location, size, and hand of each door; elevation of each kind of door; construction details not covered in Product Data; location and extent of hardware blocking; and other pertinent data.

1. Indicate dimensions and locations of mortises and holes for hardware.
2. Indicate dimensions and locations of cutouts.
3. Indicate requirements for veneer matching.
4. Indicate doors to be factory finished and finish requirements.
5. Indicate fire ratings for fire doors.

C. Samples for Verification: As follows:

1. Corner sections of doors approximately 8 by 10 inches (200 by 250 mm) with door faces and edgings representing the typical range of color and grain for each species of veneer and solid lumber required. Finish sample with same materials proposed for factory-finished doors.

2. Louver blade and frame sections, 6 inches (150 mm) long, for each material and finish specified.

3. Frames for light openings, 6 inches (150 mm) long, for each material, type, and finish required.

1.4 QUALITY ASSURANCE

A. Source Limitations: Obtain flush wood doors through one source from a single manufacturer.

B. Quality Standard: Comply with the following standard:

1. NWWDA Quality Standard:
NWWDA I.S.l-A, "Architectural Wood Flush Doors."

2. AWl Quality Standard:
AWl's "Architectural Woodwork Quality Standards" for grade of door, core, construction, finish, and other requirements.

C. Fire-Rated Wood Doors:
Doors complying with NFPA 80 that are listed and labeled by a testing and inspecting agency acceptable to authorities having jurisdiction, for fire ratings indicated, based on testing according to NFPA 252.

1. Test Pressure: Test at atmospheric pressure.

1.5 DELIVERY, STORAGE, AND HANDLING

A. Protect doors during transit, storage, and handling to prevent damage, soiling, and deterioration. Comply with requirements of referenced standard and manufacturer's written instructions.

1. Individually package doors in plastic bags or cardboard cartons.

2. Individually package doors in cardboard cartons and wrap bundles of doors in plastic sheeting.

B. Mark each door with individual opening numbers used on Shop Drawings. Use removable tags or concealed markings.

1.6 PROJECT CONDITIONS

A. Environmental Limitations:
Do not deliver or install doors until conditions for temperature and relative humidity have been stabilized and will be maintained in storage and installation areas during the remainder of the construction period to comply with requirements of the referenced quality standard for Project's geographical location.

1.7 WARRANTY

A. General Warranty:
Door manufacturer's warranty specified in this Article shall not deprive the Owner of other rights the Owner may have under other provisions of the Contract Documents and shall be in addition to, and run concurrent with, other warranties made by the Contractor under requirements of the Contract Documents.

B. Door Manufacturer's Warranty:
Submit written agreement on door manufacturer's standard form, signed by manufacturer, Installer, and Contractor, agreeing to repair or replace defective doors that have warped (bow, cup, or twist) more than 114 inch (6.35 mm) in a 42-by-84-inch (1067-by-2134-mm) section or that show telegraphing of core construction in face veneers exceeding 0.01 inch in a 3-inch (0.25 mm in a 75- mm) span, or do not comply with tolerances in referenced quality standard.

1. Warranty shall also include installation and finishing that may be required due to repair or replacement of defective doors.

2. Warranty shall be in effect during the following period of time after the date of Substantial Completion:

a. Solid-Core Interior Doors: Life of installation.

PART 2 - PRODUCTS

2.1 MANUFACTURERS

A. Available Manufacturers:
Subject to compliance with requirements, manufacturers offering products that may be incorporated into the Work include, but are not limited to, the following:

1. Flush Wood Doors:

a. Eggers Industries; Architectural Door Division.

b. Mohawk Flush Doors, Inc.

c. Weyerhaeuser Co.

2. Metal Louvers for Doors:

a. Air Louvers, Inc.

b. Anemostat Door Products.

c. Construction Specialties, Inc.

d. Leslie-Locke, Inc.

2.2 DOOR CONSTRUCTION, GENERAL

A. Doors for Transparent Finish:
Comply with the following requirements:

1. Grade: Premium, with Grade AA faces.

2. Faces: Red Oak.

3. Match between Veneer Leaves: Red Oak.

4. Stiles: Same as species face.

2.3 SOLID-CORE DOORS

A. Particleboard Cores: Comply with the following requirements:

1. Particleboard: ANSI A208.1, Grade LD-2.

2. Blocking: Provide wood blocking at particleboard-core doors as follows:

a. 5-inch (125-mm) top-rail blocking, at doors indicated to have closers

b. 5-inch (125-mm) bottom-rail blocking, at exterior doors and doors indicated to have kick, mop, or armor plates

c. 5-inch (125-mm) midrail blocking, at doors indicated to have exit devices

B. Exterior Doors: Comply with the following requirements:

1. Core: Glued-block core

2. Construction: Five or seven plies with stiles and rails bonded to core, then entire unit abrasive planed before veneering

C. Interior Veneer-Faced Doors: Comply with the following requirements:

1. Core: Particleboard core

2. Construction:
Five or seven plies with stiles and rails bonded to core, then entire unit abrasive planed before veneering.

D. Fire-Rated Doors: Comply with the following requirements:

1. Construction:
Construction and core specified above for type of face indicated or manufacturer's standard mineral-core construction as required to provide fire rating indicated.

2. Blocking:
For mineral-core doors, provide composite blocking with improved screw-holding capability approved for use in doors of fire ratings indicated and as follows:

a. 5-inch (125-mm) top-rail blocking.

b. 5-inch (125-mm) bottom-rail blocking, at doors indicated to have kick, mop, or armor plates.

c. 4-1/2-by-10-inch (114-by-250-mm) lock blocks.

d. 5-inch (125-mm) mid-rail blocking, at doors indicated to have exit devices.

e. As necessary to eliminate need for through-bolting hardware.

3. Edge Construction:
At hinge stiles, provide manufacturer's standard laminated-edge construction with improved screw-holding capability and split resistance and with outer stile matching face veneer.

2.4 LOUVERS AND LIGHT FRAMES

A. Metal Louvers: As follows:

1. Blade Type: Adjustable type with spring closer and 135 deg F (57 deg C) fusible link.

2. Metal and Finish:
Galvanized steel, 0.0396 inch (1.0 mm) thick, hot-dip zinc coated and factory primed for paint finish.

B. Metal Frames for Light Openings in Fire Doors:
Manufacturer's standard frame formed of 0.0478-inch- (1.2-mm-) thick, cold-rolled steel sheet, factory primed and approved for use in doors of fire rating indicated.

2.5 FABRICATION

A. Fabricate flush wood doors in sizes indicated for Project site fitting.

B. Fabricate and trim doors to size at factory to coordinate with frame shop drawings and floor finishes as indicated in the finish schedule.

C. Factory machine doors for hardware that is not surface applied. Locate hardware to comply with DHI- WDHS-3. Comply with final hardware schedules, door frame Shop Drawings, DHI All5-W series standards, and hardware templates.

1. Coordinate measurements of hardware mortises in metal frames to verify dimensions and alignment before factory machining.

D. Openings:
Cut and trim openings through doors to comply with applicable requirements of referenced standards for kind(s) of door(s) required.

1. Light Openings: Trim openings with moldings of material and profile indicated.

2. Louvers: Factory install louvers in prepared openings.

E. Exterior Doors: Factory treat exterior doors with water repellent after manufacturing has been completed.

1. Flash top of out-swinging doors (with manufacturer's standard metal flashing)

2.6 SHOP PRIMING

A. Transparent Finish:
Shop seal faces and edges of doors for transparent finish with stain (if required), other required pretreatments, and first coat of finish as specified in the following:

1. Division 9 Section "Painting"

2. Division 9 Section "Exterior Wood Stains"

2.7 FACTORY FINISHING

A. General: Comply with referenced quality standard's requirements for factory finishing.

B. Finish wood doors at factory

C. Transparent Finish:
Comply with requirements indicated for grade, finish system, staining effect, and sheen.

1. Grade: Custom

2. Finish: AWI System TR-4 conversion varnish

3. Staining: Match building standard

4. Effect: Match building standard

5. Sheen: Match building standard

PART 3 - EXECUTION

3.1 EXAMINATION

A. Examine installed door frames before hanging doors.

1. Verify that frames comply with indicated requirements for type, size, location, and swing characteristics and have been installed with plumb jambs and level heads.

2. Reject doors with defects.

B. Proceed with installation only after unsatisfactory conditions have been corrected.

3.2 INSTALLATION

A. Hardware:
For installation, see Division 8 Section "Door Hardware."

B. Manufacturer's Written Instructions:
Install wood doors to comply with manufacturer's written instructions, referenced quality standard, and as indicated.

1. Install fire-rated doors in corresponding fire rated frames according to NFPA 80.

C. Job-Fit Doors:
Align and fit doors in frames with uniform clearances and bevels as indicated below; do not trim stiles and rails in excess of limits set by manufacturer or permitted with fire-rated doors. Machine doors for hardware. Seal cut surfaces after fitting and machining.

1. Clearances:
Provide l/8 inch (3.2 mm) at heads, jambs, and between pairs of doors. Provide l/8 inch (3.2 mm) from bottom of door to top of decorative floor finish or covering. Where threshold is shown or scheduled, provide l/4 inch (6.4 mm) from bottom of door to top of threshold.

a. Comply with NFPA 80 for fire-rated doors.

2. Bevel non-fire-rated doors 1/8 inch in 2 inches (3-1/2 degrees) at Jock and hinge edges.

3. Bevel fire-rated doors 1/8 inch in 2 inches (3-1/2 degrees) on lock edge; trim stiles and rails only to extent permitted by labeling agency.

D. Factory-Finished Doors: Restore finish before installation, if fitting or machining is required at Project site.

3.3 ADJUSTING AND PROTECTING

A. Operation: Rehang or replace doors that do not swing or operate freely.

B. Finished Doors: Refinish or replace doors damaged during installation.

C. Protect doors as recommended by door manufacturer to ensure that wood doors are without damage or deterioration at the time of Substantial Completion.

END OF SECTION

PART 1 - GENERAL

1.1 RELATED DOCUMENTS

A. Drawings and general provisions of Contract, including General and Supplementary Conditions and Division 1 Specification Sections, apply to this Section.

1.2 SUMMARY

A. This Section includes items known commercially as finish or door hardware that are required for swing, sliding, and folding doors, except special types of unique hardware specified in the same sections as the doors and door frames on which they are installed.

B. This Section includes the following:

1. Hinges
2. Continuous hinges
3. Pivots
4. Spring hinges
5. Key control system
6. Lock cylinders and keys
7. Lock and latch sets
8. Bolts
9. Exit devices
10. Push/Pull units
11. Closers
12. Overhead holders
13. Miscellaneous door control devices
14. Door trim units
15. Protection plates
16. Weather stripping for exterior doors
17. Sound stripping for interior doors
18. Automatic drop seals (door bottoms)

19. Astragals or meeting seals on pairs of doors

20. Thresholds

C. Related Sections:
The following Sections contain requirements that relate to this Section:

1. Section 08110: Steel Doors and Frames

2. Section 08211: Flush Wood Doors

3. Section 08410: Metal-framed Storefronts

4. Division 16: Electrical

D. Products furnished but not installed under this Section to include:

1. Cylinders for locks on hi-parting aluminum doors.

2. Cylinders for locks on frameless glass doors.

3. Final replacement cores and keys to be installed as directed by Owner.

1.3 REFERENCES

A. Standards of the following as referenced:

1. American National Standards Institute (ANSI)

2. Door and Hardware Institute (DHI)

3. Factory Mutual (FM)

4. National Fire Protection Association (NFPA)

5. Underwriters' Laboratories, Inc. (UL)

a. UL 1OC - Fire Tests Door Assemblies

6. Warnock Hersey

B. Regulatory standards of the following as referenced:

1. Department of Justice, Office of the Attorney General, *Americans with Disabilities Act*, Public Law 110-325 (ADA)

2. CABO/ANSI A117.1: Providing Accessibility and Usability for Physically Handicap People, 2017 edition

1.4 SUBMITTALS

A. General:

Submit the following in accordance with Conditions of Contract and Division 1 Specification sections.

B. Product data including manufacturers' technical product data for each item of door hardware, installation instructions, maintenance of operating parts and finishes, and other information necessary to show compliance with requirements. For items other than those scheduled in the "Headings" of Section 3, provide catalog information for the specified items and for those submitted.

C. Final hardware schedule coordinated with doors, frames, and related work to ensure proper size, thickness, hand, function, and finish of door hardware.

1. Final Hardware Schedule Content:
Based on hardware indicated, organize schedule into vertical format "hardware sets" indicating complete designations of every item required for each door or opening. Use specification heading numbers with any variations suffixed a, b, etc. Include the following information:

a. Type, style, function, size, and finish of each hardware item.

b. Name and manufacturer of each item.

c. Fastenings and other pertinent information.

d. Location of each hardware set cross-referenced to indications on Drawings both on floor plans and in door and frame schedule.

e. Explanation of all abbreviations, symbols, and codes contained in schedule.

f. Mounting locations for hardware.

g. Door and frame sizes and materials.

h. Keying information.

i. Wiring diagrams, riser diagrams and system descriptions fully detailing the function(s) of each electrically controlled opening.

j. Cross-reference numbers used within schedule deviating from those specified.

i. Column 1: State specified item and manufacturer.

ii. Column 2: State prior approved substituted item and its manufacturer.

2. Submittal Sequence:
Submit final schedule at earliest possible date, particularly where acceptance of hardware schedule must precede fabrication of other work that is critical in the Project construction schedule. Include with schedule the product data, samples, shop drawings of other work affected by door hardware, and other information essential to the coordinated review of schedule.

3. Keying Schedule:
Submit separate detailed schedule indicating clearly how the Owner's final instructions on lock functions and keying of locks has been fulfilled.

D. Samples of each type of exposed hardware unit in finish indicated and tagged with full description for coordination with schedule. Submit samples prior to submission of final hardware schedule.

1. Samples will be returned to the supplier. Units that are acceptable and remain undamaged through submittal, review, and field comparison process may, after final check of operation, be incorporated into the Work, within limitations of function and keying coordination requirements.

E. Templates for doors, frames, and other work specified to be factory prepared for the installation of door hardware. Check shop drawings of other work to confirm that adequate provisions are made for locating and installing door hardware to comply with indicated requirements.

F. Contract closeout submittals:

1. Operation and maintenance data: Complete information for installed door hardware

2. Warranty: Completed and executed warranty forms

1.5 QUALITY ASSURANCE

A. Single Source Responsibility:
Obtain each type of hardware (latch and locksets, hinges, closers, etc.) from a single manufacturer.

B. Supplier Qualifications:
A recognized architectural door hardware supplier, with warehousing facilities in the Project's vicinity, that has a record of successful in-service performance for supplying door hardware similar in quantity, type, and quality to that indicated for this Project and that employs an experienced Architectural Hardware Consultant (AHC) who is available to the Owner, Owner’s Representative and Contractor, at reasonable times during the course of the Work, for consultation.

C. Coordination Meetings:
Supplier shall set up and attend the following:

1. Supplier to meet with the Owner to finalize lock functions and keying requirements and to obtain final instructions in writing.

2. Supplier to meet with the installer prior to beginning of installation of door hardware.

3. Supplier to meet with the Owner, General Contractor, electrical and security contractors to coordinate all electrical hardware items. Supplier to provide riser diagrams and wiring diagrams as required by the General and sub-contractors.

D. Fire-Rated Openings:
Provide door hardware for fire-rated openings that complies with NFPA Standard No. 80 requirements of authorities having jurisdiction. Provide only items of door hardware that are listed and tested by UL or Warnock Hersey for given type/size opening and degree of label. Provide proper latching hardware, door closers, approved-bearing hinges and seals whether listed in the Hardware Schedule or not. All hardware shall comply with standards IBC 702 (2018) and UL 1O C.

1. Where emergency exit devices are required on fire-rated doors, (with supplementary marking on doors' UL labels indicating "Fire Door to be equipped with Fire Exit Hardware"), provide UL label on exit devices indicating "Fire Exit Hardware".

1.6 PRODUCT HANDLING

A. Tag each item or package separately with identification related to final hardware schedule and include basic installation instructions with each item or package.

B. Packaging of door hardware is responsibility of supplier. As material is received by hardware supplier from various manufacturers, sort and repackage in containers clearly marked with appropriate hardware set number to match set numbers of approved hardware schedule. Two or more identical sets may be packed in same container.

C. Inventory door hardware jointly with representatives of hardware supplier and hardware installer until each is satisfied that count is correct.

D. Deliver individually packaged door hardware items promptly to place of installation (shop or Project site).

E. Provide secure lock-up for door hardware delivered to the Project, but not yet installed. Control handling and installation of hardware items that are not immediately replaceable so that completion of the Work will not be delayed by hardware losses both before and after installation.

1.7 WARRANTY

A. Special warranties:

1. Door Closers: Ten-year period

2. Exit Devices: Three-year period

3. Automatic Door Operators: Two-year period

4. Locks and Cylinders: Three-year period

1.8 MAINTENANCE

A. Maintenance Tools and Instructions:

Furnish a complete set of specialized tools and maintenance instructions as needed for Owner's continued adjustment, maintenance, and removal and replacement of door hardware.

B. Parts kits: Furnish manufacturers' standard parts kits for locksets, exit devices, and door closers.

PART 2 - PRODUCTS

2.1 MANUFACTURED UNITS

(*Denotes manufacturer referenced in the Hardware Headings)

A. Hinges:

1. Acceptable manufacturers:

a. Ives*

b. Hager Companies

c. Bommer

2. Characteristics:

a. Templates: Provide only template-produced units

b. Screws: Provide Phillips flat-head screws complying with the following requirements:

i. For metal doors and frames, install machine screws into drilled and tapped holes.

ii. For wood doors and frames, install threaded-to-the-head wood screws.

iii. For fire-rated wood doors, install #12 x 1-1/4 inch, threaded-to-the-head steel wood screws.

iv. Finish screw heads to match surface of hinges or pivots.

c. Hinge pins: Except as otherwise indicated, provide hinge pins as follows:

i. Out-Swing Exterior Doors: Non-removable pins.

i. Out-Swing Corridor Doors with Locks: Non-removable pins.

ii. Interior Doors: Non-rising pins.

iii. Tips: Flat button and matching plug. Finished to match leafs.

d. Size: Except as otherwise indicated, size hinges as follows:

i. Exterior Doors: Heavy weight, ball bearing, nonferrous, 5 x 4-1/2

iv. Interior Doors:

1) Doors up to 3'-0" in width: Standard weight, ball bearing, 4-1/2 x 4-1/2

2) Doors over 3'-1" in width and labeled doors over 8'-0" in height: Heavy weight, ball bearing, 5 x 4-1/2.

e. Quantity:

Furnish one pair of hinges for all doors up to 5'-0" high. Furnish one hinge for each additional 2-1/2 feet or fraction thereof.

B. Continuous Hinges:

1. Acceptable manufacturers:

a. Select Products Ltd.*

b. Hager Companies

c. Markar Products

2. Characteristics:

a. Continuous geared hinges to be manufactured of extruded 6063 T6 aluminum alloy with anodized finish and concealed, self-lubricating thrust bearings.

b. Continuous barrel-type hinges to be manufactured of stainless steel with knuckles formed around a pin extending the entire length of the hinge.

c. Uncut hinges shall be non-handed, manufactured to template.

d. Hinges to be assembled in matching pairs. Fasteners supplied shall be 305 stainless steel.

e. Provide UL listed continuous hinges at fire doors. Continuous hinges at fire doors shall meet the required ratings without the use of auxiliary fused pins or studs.

C. Cylinders:

1. Acceptable manufacturers:

a. Schlage* Everest-D/Primus

b. Medeco

c. Sargent ASSA V-I 0

2. Characteristics:

a. Standard System:

Except as otherwise indicated, provide new great grandmaster key system for Project. Allow for expansion to accommodate future rekeying of existing facilities and for future new construction.

b. At perimeter openings and elsewhere as shown, equip locksets with high-security, interchangeable core controlled access cylinders that comply with the performance requirements of ANSI AI56.5, 1992, Grade I Operational.

c. Unless otherwise indicated, equip interior locksets with interchangeable core cylinders featuring patented, restricted keys and auxiliary locking pin. Patented key and cylinder design shall be valid until 2021.

d. Furnish temporary construction cores for all perimeter openings, electrical and mechanical room doors, and elsewhere as shown. Furnish final cores and keys for installation as directed by Owner.

e. Comply with Owner's instructions for great grandmaster keying and, except as otherwise indicated, provide individual change key for each lock that is not designated to be keyed alike with a group of related locks.

i. Permanently inscribe each key with manufacturer's key symbol, and notation, "DO NOT DUPLICATE."

i. Permanently inscribe each cylinder, in a concealed location, with manufacturer's key symbol.

f. Key Material: Provide keys of nickel silver only.

g. Key and Core Quantity:

i. Furnish 3 change keys for each lock, not to exceed l0 change keys for each keyed alike group

ii. Furnish 4 control keys

iii. Furnish 5 master keys for each master system

iv. Furnish 5 grandmaster keys for each grandmaster system

v. Furnish 5 great grandmaster keys for each great grandmaster system

vi. Furnish 10 construction master keys

vii. Furnish 2 construction control keys

viii. Furnish 200 extra blanks for each keyway

ix. Furnish 10 extra un-combinated cores for each keyway

h. Furnish 1 Framon KX-1 Code Machine with space cams, depth cams, vices and cutters as required to accommodate key system

i. Key Control software:
Schlage Sitemaster 200 for Windows or equivalent, preloaded with factory bitting, door numbers and keysets per instructions.

j. Deliver keys, extra cores, key control software and code machine to Owner.

D. Locksets, Latchsets, Deadbolts:

1. Acceptable manufacturers:

a. Schlage* L9000 Series, 07A Lever Design

2. Mortise Locksets and Latchsets: as scheduled.

a. Chassis: Cold-rolled steel, handing field-changeable without disassembly.

b. Latch bolts: 3/4-inch throw stainless steel anti-friction type

c. Lever Trim: Through-bolted, accessible design and independent break-away spindles.

d. Thumb turns: Accessible design not requiring pinching or twisting motions to operate.

e. Deadbolts: Stainless steel l-inch throw.

f. Electric operation: Manufacturer-installed continuous duty solenoid.

g. Strikes: 16 gage curved stainless steel with 1" deep box construction, lips of sufficient length to clear trim and protect clothing.

h. Certifications:

i. ANSI A156.13, 1994, Grade 1 Operational, Grade 2 Security.

i. Attic Stock: (Deliver to owner)

i. Furnish 2 passage lock bodies

ii. 2 privacy lock bodies

iii. 5 office/classroom lock bodies

iv. 2 storeroom lock bodies

v. 5 complete sets trim

vi. 10-cylinder housings

E. Manually Programmable Access Control Locks:

1. Acceptable manufacturers:

a. Schlage* PR05500 Series, 17 Lever design

2. Characteristics:

a. Access control locks shall be battery-powered, stand alone, keypad programmable with cylinder override.

b. Allow for a minimum of 120 three to eight digit user codes.

c. Certifications: ANSI/BHMA Grade 1

F. Exit Devices:

1. Acceptable manufacturers:

a. Von Duprin* 35A/98 Series

2. Characteristics:

a. Exit devices shall be "UL" listed for life safety. All exit devices for fire rated openings shall have "UL" labels for "Fire Exit Hardware."

b. Exit devices mounted on labeled wood doors shall be mounted on the door per the door manufacturer's requirements.

c. Trim shall be thru bolted to the lock stile case. Lever design to match locksets.

d. Exit devices shall be equipped with cylinder dogging feature in lieu of hex dogging.

e. Exit devices shall be made of brass, bronze, stainless steel, or aluminum material, powder coated, anodized, or plated to the standard architectural finishes to match the balance of the door hardware.

f. Provide glass bead conversion kits to shim exit devices on doors with raised glass heads.

g. All series of exit devices shall incorporate a fluid damper, which decelerates the touchpad on its return stroke and eliminates noise associated with exit device operation. All exit devices shall be non-handed. Touchpad shall extend a minimum of 1/2 of the door width and shall extend to the height of the cross-rail housing for a "no pinch" operation. Plastic touchpads are not acceptable. All latch bolts to be the deadlocking type. Latch bolts shall have a self-lubricating coating to reduce wear. Plated or plastic-coated latch bolts are not acceptable. Plastic linkage and "dogging" components are not acceptable.

h. Lever trim shall be solid case material with a break-away feature to limit damage to the unit from vandalism.

i. Surface vertical rod devices shall be UL labeled for fire door applications without the use of bottom rod assemblies (LBR). Where bottom rods are required for security applications, the devices shall be UL labeled for fire doors applications with rod and latch guards by the device manufacturer.

j. Exit devices to include impact resistant, flush mounted end cap design to avoid damage due to carts and other heavy objects passing through an opening. End cap shall be of heavy-duty metal alloy construction and provide horizontal adjustment to provide alignment with device cover plate. When exit device end cap is installed, no raised edges will protrude.

G. Closers and Door Control Devices:

1. Acceptable manufacturers:

a. LCN Closers*

2. Characteristics:

a. Door closers shall have fully hydraulic, full rack and pinion action with a high strength cast iron cylinder.

b. All closers shall utilize a stable fluid withstanding temperature range of l20°F to -30°F without seasonal adjustment of closer speed to properly close the door. Closers for fire-rated doors shall be provided with temperature stabilizing fluid that complies with standards IBC 7-2 (2015) and UL l0C.

c. Spring power shall be continuously adjustable over the full range of closer sizes, and allow for reduced opening force for the physically handicapped. Spring power adjustment (LCN Fast ™ Power Adjust) allows for quick and accurate power adjustment and visually shows closer power size settings by way of dial adjustment gauge located on closer spring tube. Hydraulic regulation shall be by tamper-proof, non-critical valves. Closers shall have separate adjustment for latch speed, general speed and back check.

d. All closers shall have solid forged steel main arms (and forearms for parallel arm closers) and where specified shall have a cast-in solid stop on the closer shoe ("CUSH"). Where closer is mounted on the push side, use "EDA" type closers and where door travel must be limited, use "CUSH" or "SCUSH" type closers. Auxiliary stops are not required when cush type closers are used.

e. Furnish all closers with full metal covers (MC).

f. Access- Free Manual Closers: Where manual closers are indicated for doors required to be accessible to the physically handicapped provide adjustable units comply with ADA and ANSI A-117.l provisions for door opening force.

g. Closers to be installed to allow door swing as shown on plans. Doors swinging into exit corridors shall provide for corridor clear width as required by code. Where possible, mount closers inside rooms.

h. Powder coating finish to be certified to exceed l00 hours salt spray testing by ETL, an independent testing laboratory used by BHMA for ANSI certification.

i. Magnetic Door Holders to be heavy duty wall mounted with metal housing and complete mounting hardware. Provide 24V holding coils unless otherwise scheduled.

j. Attic Stock: Furnish 8 extra closer bodies as scheduled. Deliver attic stock to Owner.

H. Floor Stops and Wall Bumpers:

1. Acceptable manufacturers:

a. Ives*

b. Rockwood Manufacturing

c. Hager Companies

2. Characteristics: Refer to Hardware Headings.

I. Door Bolts/Coordinators:

1. Acceptable manufacturers:

a. Ives*

b. Rockwood Manufacturing

c. Hager Companies

2. Characteristics:

a. Flush bolts to be forged brass 6-3/4" x 1", with 112" diameter bolts. Plunger to be supplied with milled surface one side that fits into a matching guide.

b. Provide dustproof type bottom strikes.

J. Plush Plates:

1. Acceptable manufacturers:

a. Ives*

b. Rockwood Manufacturing

c. Hager Companies

2. Characteristics:

a. Exposed Fasteners: Provide manufacturers standard exposed fasteners.

b. Provide plates sized as shown in Hardware Headings.

K. Door Pulls & Pull Plates:

1. Acceptable manufacturers:

   a. Ives*

   b. Rockwood Manufacturing

   c. Hager Companies

2. Characteristics:

   a. Provide concealed thru-bolted trim on back to back mounted pulls, but not for single units.

   b. Provide unit type and size as shown in Hardware Headings.

L. Push Pull Sets:

1. Acceptable manufacturers:

   a. Ives*

   b. Rockwood Manufacturing

   c. Hager Companies

2. Characteristics:

   a. Provide mounting systems as shown in Hardware Headings.

   b. Provide Push/Pull sets of type and size as shown in Hardware Headings.

M. Protective Plates:

1. Acceptable manufacturers:

   a. Ives*

   b. Rockwood Manufacturing

   c. Hager Companies

2. Characteristics:

   a. Provide manufacturers standard exposed fasteners for door trim units consisting of either machine screws or self-tapping screws.

   b. Materials: Stainless Steel, .050-inch US 18 gage

   c. Fabricate protection plates not more than 2 inches less than door width on hinge side and not more than I inch less than door width on pull side.

   d. Heights:

i. Kick plates to be 10 inches in height.

ii. Mop plates to be 10 inches in height.

iii. Armor plates to be 36 inches in height. Armor plates on fire doors to comply with NFPA 80.

N. Thresholds:

1. Acceptable manufacturers:

a. National Guard Products, Inc.*

b. Hager Companies

c. Pemko Manufacturing

2. Types: Indicated in Hardware Headings.

O. Door Seals/Gasketing:

1. Acceptable manufacturers:

a. National Guard Products, Inc.*

b. Hager Companies

c. Pemko Manufacturing

2. Types: Indicated in Hardware Headings.

P. Silencers:

1. Acceptable manufacturers:

a. Hager Companies

b. Ives

c. Rockwood Manufacturing

2. Three each for single doors; two each for pairs of doors and four each for double egress doors.

Q. Key Cabinet and System:

1. Acceptable manufacturers:

a. Telkee, Inc.* AWC-450-S

2. Provide a key control system including envelopes, labels, tags with self-locking key clips, receipt forms, 3-way visible card index, temporary markers, permanent markers, and standard metal cabinet, all as recommended by system manufacturer.

   a. Provide complete cross index system set up by key control distributor, and place keys on markers and hooks in the cabinet as determined by the final key schedule.

   b. Provide hinged-panel type cabinet for wall mounting.

2.2 MATERIALS AND FABRICATION

A. Base Metals:
Produce hardware units of basic metal and forming method indicated, using manufacturer's standard metal alloy, composition, temper, and hardness, but in no case of lesser (commercially recognized) quality than specified for applicable hardware units by applicable ANSI/BHMA A156 series standards for each type of hardware item and with ANSI/BHMA A156.18 for finish designations indicated. Do not furnish "optional" materials or forming methods for those indicated, except as otherwise specified.

B. Fasteners:
Provide hardware manufactured to conform to published templates, generally prepared for machine screw installation.

1. Do not provide hardware that has been prepared for self-tapping sheet metal screws, except as specifically indicated.

2. Furnish screws for installation with each hardware item. Provide Phillips flat-head screws except as otherwise indicated. Finish exposed (exposed under any condition) screws to match hardware finish or, if exposed in surfaces of other work, to match finish of this other work as closely as possible including "prepared for paint" surfaces to receive painted finish.

3. Provide concealed fasteners for hardware units that are exposed when door is closed except to the extent no standard units of type specified are available with concealed fasteners.

4. Use thru bolts for installation of all exit devices, closers and overhead stops. Coordinate with wood doors and metal doors and frames. Where thru-bolts are used, as a means of reinforcing the work, provide sleeves for each thru-bolt or use sex screw fasteners.

2.3 HARDWARE FINISHES

A. Match items to the manufacturer's standard color and texture finish for the latch and lock sets.

B. Provide finishes that match those established by ANSI or, if none established, match the Owner's Representative's sample.

C. Provide quality of finish, including thickness of plating or coating (if any), composition, hardness, and other qualities complying with manufacturer's standards, but in no case less than specified by referenced standards for the applicable units of hardware.

D. Provide protective lacquer coating on all exposed hardware finishes of brass, bronze, and aluminum, except as otherwise indicated. The suffix "-NL" is used with standard finish designations to indicate "no lacquer."

E. The designations used to indicate hardware finishes are those listed in ANSIIBHMA Al56.18, "Materials and Finishes," including coordination with the traditional U.S. finishes shown by certain manufacturers for their products.

1. Hinges: 630 (US32D) Satin Stainless Steel
2. Continuous Geared Hinges: 628 (US28) Clear Anodized Aluminum
3. Continuous Pinned Barrel Hinges: 630 (US32D) Satin Stainless Steel
4. Flush Bolts: 626 (US26D) Satin Chrome Plated Brass/Bronze
5. Locks: 630 (US32D) Satin Stainless Steel
6. Manually Programmable Access Control Locks: 626 (US26D) Satin Chrome Plated Brass/Bronze
7. Exit Devices: 628 (US28) chassis, 689 (powder coated) covers, and 630 (US32D) touchpads
8. Door Closers: 689 Powder Coat Aluminum
9. Push Plates: 630 (US32D) Satin Stainless Steel
10. Pull Plates: 630 (US32D) Satin Stainless Steel
11. Push Pull Sets: 630 (US32D) Satin Stainless Steel
12. Protective Plates: 630 (US32D) Satin Stainless Steel
13. Wall Stops: 630 (US32D) Satin Stainless Steel
14. Floor Stops: 626 (US26D) Satin Chrome Plated Brass/Bronze
15. Overhead Holders: 630 Satin Stainless Steel
16. Thresholds/Weather stripping: 627/628 (US27/US28) Aluminum

PART 3 - EXECUTION

3.1 INSTALLATION

A. Mount hardware units at heights indicated in following applicable publications, except as specifically indicated or required to comply with governing regulations and except as otherwise directed by Owner's Representative.

1. "Recommended Locations for Builders Hardware for Standard Steel Doors and Frames" by the Door and Hardware Institute.

2. "Recommended Locations for Builders Hardware for Custom Steel Doors and Frames" by the Door and Hardware Institute.

3. NWWDA Industry Standard I.S.l.7, "Hardware Locations for Wood Flush Doors."

B. Install each hardware item in compliance with the manufacturer's instructions and recommendations. Where cutting and fitting is required to install hardware onto or into surfaces that are later to be painted or finished in another way, coordinate removal, storage, and reinstallation or application of surface protection with finishing work specified in the Division 9 Sections. Do not install surface-mounted items until finishes have been completed on the substrates involved.

C. Set units level, plumb, and true to line and location. Adjust and reinforce the attachment substrate as necessary for proper installation and operation.

D. Drill and countersink units that are not factory prepared for anchorage fasteners. Space fasteners and anchors in accordance with industry standards.

E. Set thresholds for exterior doors in full bed of butyl-rubber or polyisobutylene mastic sealant complying with requirements specified in Division 7 Section "Joint Sealers".

F. Weather Stripping and Seals:
Comply with manufacturer's instructions and recommendations to the extent installation requirements are not otherwise indicated.

3.2 ADJUSTING, CLEANING, AND DEMONSTRATING

A. Adjust and check each operating item of hardware and each door to ensure proper operation or function of every unit. Replace units that cannot be adjusted to operate freely and smoothly or as intended for the application made.

1. Where door hardware is installed more than one month prior to acceptance or occupancy of a space or area, return to the installation during the week prior to acceptance or occupancy and make final check and adjustment of all hardware items in such space or area. Clean operating items as necessary to restore proper function and finish of hardware and doors. Adjust door control devices to function properly with final operation of heating and ventilating equipment.

B. Clean adjacent surfaces soiled by hardware installation.

C. Door Hardware Supplier's Field Service

1. Inspect door hardware items for correct installation and adjustment after complete installation of door hardware.

2. Instruct Owner's personnel in the proper adjustment and maintenance of door hardware and hardware finishes.

3. File written report of this inspection to the Owner's Representative.

D. Door Hardware Manufacturers' Field Service

1. Prior to project completion, representatives of the lock, exit device and overhead closer manufacturers shall inspect all units and certify that all units are installed in accordance with the manufacturer's instructions, and are regulated properly and functioning correctly.

2. A written report of the inspection results shall be provided to the Owner's Representative and shall include the appropriate certificates.

END OF SECTION

PART 1 - GENERAL

1.1 SUMMARY

A. Section Includes:
Application of salt-retaining water repellent stucco for masonry substrates. Specification includes surface preparation.

B. Related Sections:
Related sections include the following:

1. Section 09772- Silicate Coatings.

1.2 REFERENCES

A. General:
The publications listed below form a part of this Specification to the extent referenced. The publications are referred to in the text by the basic designation only.

B. Deutsches Institut fur Normung (DIN), European Standard (EN), and International Organization for Standardization (ISO):

1. DIN EN 998-1, Specification for mortar for masonry- Part I: Rendering and plastering mortar.

2. DIN V 18550, strength standard for render and rendering systems.

C. WTA, acronym for International Association for Science and Technology of Building Maintenance and Monuments Preservation, www.wta.de/en.

1. Technical Bulletin 2-9-04/D, Renovation Mortar Systems.

1.3 DEFINITIONS

A. Gentle Cleaner: A detergent used to remove soiling from mineral surfaces.

B. Renovation Stucco: A dry sacked specification grade stucco mix.+

C. Base Coat: First coat of renovation stucco.

D. Finish Coat: Second coat of renovation stucco.

1.4 SYSTEM DESCRIPTION

A. Gentle Cleaner: A neutral biodegradable cleaning concentrate for gentle cleaning of mineral surfaces.

B. Renovation Stucco:

A WTA certified materials-compatible highly vapor permeable water repellent restoration/renovation render based on trass binders and hydraulic cement with elevated salt retention capacity. Install over mineral surfaces.

1.5 SUBMITTALS

A. Product Data:
Submit product data showing material proposed. Submit sufficient information to determine compliance with the Drawings and Specifications. Provide published documentation describing materials, characteristics, and limitations.

B. Samples:
Submit samples for verification purposes, fabrication techniques and workmanship.

C. Manufacturer's Instructions:
Submit manufacturer's instructions including technical data sheets, material safety data sheets, mixing instructions, application requirements, special procedures, and conditions requiring special attention.

1.6 QUALITY ASSURANCE

A. Qualifications:

1. Manufacturer Qualifications:
Provide evidence that Manufacturer is a firm engaged in the manufacture of silicate coatings of types required, and whose products have been in satisfactory use in similar service for a minimum of ten years.

2. Applicator Qualifications:

a. Provide evidence Applicator is a firm having a minimum of three years of successful application experience with projects similar in type and scope to that required for this Project, and approved by the manufacturer.

B. Mockups:
Prior to application of the work, fabricate and erect mockups for each type of finish and application to verify selections made under sample submittals and to demonstrate aesthetic effects as well as qualities of materials and execution. Build mockups to comply with the following requirements using materials indicated for final unit of work. Locate mockups as directed by the Owner's Representative. Demonstrate the proposed range of aesthetic effects and workmanship to be expected in the completed work. Obtain the Owner's Representative's acceptance of mockups before start of final unit of work.

1. Retain and maintain mockups during construction in undisturbed condition as a standard for judging completed unit of work.

1.7 DELIVERY, STORAGE, AND HANDLING

A. Deliver materials to the Project site in suppliers or manufacturer's original wrappings and containers, labeled with manufacturer's name, material and product brand name, and lot number, if any.

B. Store materials in their original undamaged packages and containers inside a well-ventilated area protected from weather, moisture, soiling, extreme temperatures, and humidity.

1.8 PROJECT CONDITIONS

A. Environmental Requirements:

1. Substrate and ambient air temperature must be above 41°F (5°C).

2. Do not apply when rain is expected, in high winds, or onto hot substrates.

1.9 WARRANTY

A. Product warranty from date of Substantial Completion is 1 (one) year.

PART 2 - PRODUCTS

2.1 MANUFACTURERS

A. Basis of Design:
Items specified are to establish a standard of quality for design, function, materials, compatibility, performance, warranty, and appearance. Equivalent products by listed manufacturers are acceptable. The Owner's Representative is the sole judge of the basis of what is equivalent.

B. KEIM Mineral Coatings of America, Inc., 10615 Texland Blvd. #600, Charlotte, North Carolina 28273. Telephone 704-588-4811. Email keim-info@keim.com.

2.2 MATERIALS

A. Gentle Cleaner: Provide detergent having these qualities:

1. Neutral pH concentrate diluted with clean water.

2. Removes well-adhering dust, fats, oil, and carbon-based pollutants from mineral surfaces.

3. Environmentally harmless and biodegradable.

4. NoVOC.

5. Basis of Design: "KEIM Stone Cleaner N", KEIM Mineral Coatings of America, Inc.

B. Renovation Stucco:
Provide dry bagged salt-retaining water repellent renovation stucco having these qualities:

1. Trass binders and hydraulic cement basis.

2. Strength corresponding to DIN V 18550, mortar category CS II and P II.

3. Compliant to DIN EN 998-1 as a rendering and plastering mortar.

4. Certified by WTA to Technical Bulletin 2-9-04/D as a renovation mortar system for salt-loaded substrates, high vapor permeability, and water repellency.

5. NoVOC.

6. Basis of Design: "KEIM Porosan Top Coat", KEIM Mineral Coatings of America, Inc.

2.3 EQUIPMENT

A. Tools:

1. Gentle Cleaner: Apply by brush or injected through steam cleaner or pressure washer. Clean up with water.

2. Renovation Stucco:
Mix with continuous automatic mixing pump or paddle on drill motor. Apply using ordinary stucco tools. Clean up with water.

2.4 FINISHES

A. Renovation Stucco base coat:
Scarify surfaces of stucco base coat to provide a key for subsequent finish stucco coat application.

B. Renovation Stucco finish coat:
Reproduce texture of surrounding surfaces or finish as directed by Owner's Representative.

PART 3 - EXECUTION

3.1 EXAMINATION

A. Verification of Conditions:
Confirm by examination the areas and conditions under which the work is to be applied for compliance with manufacturer's instructions. Do not proceed with the work until unsatisfactory conditions have been corrected.

1. Verify substrate is secure, sound, dry, absorbent, and free of dirt, grease, salts, oil-based paints, release agents, curing agents, and other bond breakers.

2. Verify substrate has no pretreatments or priming materials applied.

3. Beginning of the work shall indicate acceptance of the areas and conditions as satisfactory by the Applicator.

3.2 PREPARATION

A. Protection:
Lay ground cloths and take measures as necessary to protect surfaces subject to contact by products specified by this Section.

B. Prepare stucco surfaces:

1. Remove biological growth.
2. Sound existing stucco. Remove loose or delaminated layers to sound substrate.
3. Remove salt-laden debris from project site. Prevent debris from contacting unprotected ground.
4. Remove crumbly stucco to sound substrate by high pressure water spray or by mechanical means.
5. Do not allow salt contaminated rinse water to contact project site.

C. Remove soiling and pollutants with Gentle Cleaner: Brush Cleaning Method

1. Mechanically remove thick soil deposits.
2. Dilute 1:10 with clean water (1 part gentle cleaner to 10 parts clean water.)
3. Clean contaminated surfaces with diluted gentle cleaner. Allow to rest minimum 1 hour.
4. Reapply diluted gentle cleaner to contaminated surfaces. Rinse from bottom of facade to top and then back down with clean water to prevent loosened soil from re-depositing onto the cleaned surface.

D. Remove soiling and pollutants with Gentle Cleaner: Steam Cleaner or Pressure Washer Method

1. Dilute 1:10 with clean water (1 part gentle cleaner to 10 parts clean water.)
2. Add diluted gentle cleaner to additive reservoir of cleaning equipment. Adjust product delivery for best effect.
3. Clean contaminated surfaces from bottom to top. Rinse cleaned surfaces from bottom of facade to top and then back down with clean water to prevent loosened soil from re-depositing onto the cleaned surface.

3.3 APPLICATION

A. Conform to reviewed product data, manufacturer's written instructions, and provisions of the Contract Documents.

B. Plan the work properly.

1. Work ahead of the sun on shaded facades.
2. Do not apply on sun heated substrate.
3. Work to logical stopping points (corners, seams, architectural features, etc.)
4. Observe recommended minimum curing periods.

5. Unless otherwise stated below, protect from wind and rain prior to, during, and for a minimum 24 hours after application.

C. Renovation Stucco, base coat:

1. Ensure surfaces and substrates are completely dry.

2. Brush salt formations from surfaces. Blow surfaces clean with filtered compressed air. Do not use water.

3. Pre-wet surfaces to ensure all contact areas are dampened. Sponge off standing water.

4. Prepare renovation stucco according to product technical data sheet.

5. Place stucco into voids left from delaminated or crumbly stucco removal in one coat to plane of existing stucco. Maximum lift 3/4 inch (20 mm). Scarify fresh stucco surface after 4 hours to key for next lift.

6. Cure minimum 28 days.

D. Renovation Stucco, finish coat:

1. Ensure all contact areas are dry. Do not pre-wet surfaces.

2. Prepare renovation stucco according to product technical data sheet.

3. Apply renovation stucco finish coat in one lift minimum 3/8 inch (10 mm) over all stucco surfaces where indicated in construction documents.

4. Finish as directed in 2.4 FINISHES.

5. Protect freshly applied stucco from drying too quickly. Moist cure if necessary.

6. Cure minimum 10 days before applying silicate coating system.

3.4 CLEANING

A. Clean tools, spills, and accidental drips immediately with plenty of water.

B. Leave applications clean and premises free from residue and debris from work of this Section.

END OF SECTION

PART 1 - GENERAL

1.1 RELATED DOCUMENTS

Drawings and general provisions of the Contract, including General and Supplementary Conditions and Division 1 Specification Sections, apply to this Section.

1.2 SUMMARY

A. This Section includes the following:

1. Non-load-bearing steel framing members for gypsum board assemblies.
2. Gypsum board assemblies attached to steel framing.
3. Cementitious backer units installed with gypsum board assemblies.

B. Related Sections:
The following Sections contain requirements that relate to this Section:

1. Division 6 Section "Rough Carpentry" for the following: Wood blocking and grounds.
2. Division 7 Section "Building Insulation" for thermal insulation.
3. Division 7 Section "Fire stopping" for fire stopping systems and fire-resistive-rated joint sealants.
4. Division 9 Section "Tile" for cementitious backer units installed as substrates for ceramic tile.

1.3 DEFINITIONS

A. Gypsum Board Construction Terminology:
Refer to ASTM C 11 and GA-505 for definitions of terms related to gypsum board assemblies not defined in this Section or in other referenced standards.

1.4 ASSEMBLY PERFORMANCE REQUIREMENTS

A. Sound Transmission Characteristics:
For gypsum board assemblies indicated to have STC ratings, provide materials and construction identical to those of assemblies whose STC ratings were determined per ASTM E 90 and classified per ASTM E 413 by a qualified independent testing agency.

1.5 SUBMITTALS

A. General:
Submit the following according to Conditions of the Contract and Division 1 Specification Sections.

B. Product data for each type of product specified.

C. Product certificates signed by manufacturers of gypsum board assembly components certifying that their products comply with specified requirements.

1.6 QUALITY ASSURANCE

A. Fire-Test-Response Characteristics:
Where fire-rated gypsum board assemblies are indicated, provide materials and construction identical to those of assemblies tested for fire resistance per ASTM E II9 by an independent testing and inspecting agency acceptable to authorities having jurisdiction. Fire Resistance Ratings: As indicated by reference to GA File Numbers in GA-600 "Fire Resistance Design Manual" or to design designations in UL "Fire Resistance Directory" or in the listing of another testing and inspecting agency acceptable to authorities having jurisdiction.

B. Single-Source Responsibility for Steel Framing:
Obtain steel framing members for Gypsum board assemblies from a single manufacturer.

C. Single-Source Responsibility for Panel Products:
Obtain each type of Gypsum board and other panel products from a single manufacturer.

D. Single-Source Responsibility for Finishing Materials:
Obtain finishing materials from either the same manufacturer that supplies gypsum board and other panel products or from a manufacturer acceptable to gypsum board manufacturer.

1.7 DELIVERY, STORAGE, AND HANDLING

A. Deliver materials in original packages, containers, or bundles bearing brand name and identification of manufacturer or supplier.

B. Store materials inside under cover and keep them dry and protected against damage from weather, direct sunlight, surface contamination, corrosion, construction traffic, and other causes. Neatly stack Gypsum panels flat to prevent sagging.

C. Handle gypsum board to prevent damage to edges, ends, and surfaces. Do not bend or otherwise damage metal corner beads and trim.

1.8 PROJECT CONDITIONS

A. Environmental Conditions, General:
Establish and maintain environmental conditions for applying and finishing gypsum board to comply with ASTM C 840 and with Gypsum board manufacturer's recommendations.

B. Room Temperatures:
For non-adhesive attachment of gypsum board to framing, do not exceed 95 deg F (35 deg C).

C. Ventilation:
Ventilate building spaces, as required, for drying joint treatment materials. Avoid drafts during hot dry weather to prevent finishing materials from drying too rapidly.

PART 2 - PRODUCTS

2.1 MANUFACTURERS

A. Available Manufacturers:
Subject to compliance with requirements, manufacturers offering products that may be incorporated in the Work include, but are not limited to, the following:

1. Steel Framing and Furring:

   a. Alabama Metal Industries Corp.

   b. Consolidated Systems, Inc.

   c. Dale Industries, Inc.

   d. Dietrich Industries, Inc.

   e. Marino Industries Corp.

   f. Gold Bond Building Products Div., National Gypsum Co.

   g. Unimast Inc.

2. Grid Suspension Assemblies:

   a. Chicago Metallic Corp.

   b. National Rolling Mills Co.

   c. USG Interiors, Inc.

3. Gypsum Board and Related Products:

   a. Domtar Gypsum.

   b. Georgia-Pacific Corp.

   c. Gold Bond Building Products Div., National Gypsum Co.

2.2 STEEL FRAMING COMPONENTS FOR SUSPENDED AND FURRED CEILINGS

A. General:
Provide components complying with ASTM C 754 for materials and sizes unless otherwise indicated.

B. Wire for Hangers and Ties: ASTM A 641, Class 1 zinc coating, soft temper.

C. Hanger Rods: Mild steel and zinc-coated or protected with rust-inhibitive paint.

D. Flat Hangers: Mild steel and zinc-coated or protected with rust-inhibitive paint.

E. Angle-Type Hangers:

Angles with legs not less than 7/8-inch-wide, formed from 0.0635-inch-thick galvanized steel sheet complying with ASTM A 446 Coating Designation G90, with bolted connections and 5/16-inch-diameter bolts.

F. Channels:
Cold-rolled steel, 0.05980-inch-minimum thickness of base (uncoated) metal and 7/16-inch-wide flanges, and as follows:

1. Carrying Channels: 2 inches deep, 590 lb per 1000 feet, unless otherwise indicated

2. Carrying Channels: 1-1/2-inch-deep, 4751b per 1000 feet, unless otherwise indicated

3. Furring Channels: 3/4-inch-deep, 300 lb per 1000 feet, unless otherwise indicated

4. Finish: Rust-inhibitive paint, unless otherwise indicated

5. Finish: G-60 hot-dip galvanized coating per ASTM A 525 for framing for exterior soffits and where indicated

G. Steel Studs for Furring Channels:
ASTM C 645, with flange edges bent back 90 deg and doubled over to form 3/16-inch minimum lip (return), minimum thickness of base (uncoated) metal and minimum depth as follows:

1. Thickness: 0.0329 inch, unless otherwise indicated

2. Depth: As indicated

3. Protective Coating: G40 hot-dip galvanized coating per ASTM A 525

H. Steel Rigid Furring Channels:
ASTM C 645, hat-shaped, depth of 7/8 inch, and minimum thickness of base (uncoated) metal as follows:

1. Thickness: 0.0329 inch, unless otherwise indicated.

2. Protective Coating: G90 hot-dip galvanized coating per ASTM A 525.

I. Grid Suspension System for Interior Ceilings:
ASTM C 645, manufacturer's standard direct-hung grid suspension system composed of main beams and cross furring members that interlock to form a modular supporting network.

2.3 STEEL FRAMING FOR WALLS AND PARTITIONS

A. General:
Provide steel framing members complying with the following requirements:

1. Component Sizes and Spacing:
As indicated but not less than that required to comply with ASTM C 754 under the following maximum deflection and lateral loading conditions: Maximum Deflection: L/240 at 5 lbf per sq. ft.

2. Protective Coating: G40 hot-dip galvanized coating per ASTM A 525.

B. Steel Studs and Runners:
ASTM C 645, with flange edges of studs bent back 90 deg and doubled over to form 3/16-inch-wide minimum lip (return) and complying with the following requirements for minimum thickness of base (uncoated) metal and for depth:

1. Thickness: 0.0270 inch unless otherwise indicated

2. Thickness: 0.0329 inch where indicated

3. Depth: 3-5/8 inches, unless otherwise indicated

4. Depth: 6 inches where indicated

5. Depth: 2-1/2 inches where indicated

6. Depth: 1-5/8 inch where indicated

7. Depth: 4 inches where indicated

C. Steel Rigid Furring Channels:
ASTM C 645, hat-shaped, depth and minimum thickness of base (uncoated) metal as follows:

1. Depth: 7/8 inch.

2. Thickness: 0.0329 inch, unless otherwise indicated.

D. Fasteners for Metal Framing:
Provide fasteners of type, material, size, corrosion resistance, holding power, and other properties required to fasten steel framing and furring members securely to substrates involved; complying with the recommendations of gypsum board manufacturers for applications indicated.

2.4 GYPSUM BOARD PRODUCTS

A. General:
Provide Gypsum Board of types indicated in maximum lengths available to minimize end-to-end butt joints. Thickness: Provide Gypsum Board in thicknesses indicated or, if not otherwise indicated, in 5/8 inch thicknesses to comply with ASTM C 840 for application system and support spacing indicated.

B. Gypsum Wallboard: ASTM C 36 and as follows:

1. Type: Type X required for all assemblies

2. Type: Sag-resistant type for ceiling surfaces

3. Edges: Tapered

4. Thickness: 5/8 inch unless otherwise indicated

5. Available Products:
Subject to compliance with requirements, products that may be incorporated in the Work where proprietary gypsum wallboard is indicated include, but are not limited to, the following:

a. Gyprock Fireguard C Gypsum Board, Domtar Gypsum.

b. Firestop Type C, Georgia-Pacific Corp.

c. Fire-Shield G, Gold Bond Building Products Div., National Gypsum Co.

d. SHEETROCK Brand Gypsum Panels, FIRECODE C Core, United States Gypsum Co.

e. SHEETROCK Brand Gypsum Panels, ULTRACODE Core, United States Gypsum Co.

C. Gypsum Backing Board for Multilayer Applications:
ASTM C 442 or, where backing board is not available from manufacturer, gypsum wallboard, ASTM C 36 and as follows:

1. Type: Type X required for all assemblies

2. Edges: Square, not tapered; or V-tongue and groove

3. Thickness: 5/8 inch unless otherwise indicated

D. Water-Resistant Gypsum Backing Board: ASTM C 630 and as follows:

1. Type: Regular, unless otherwise indicated

2. Type: Type X where required for fire-resistive-rated assemblies

3. Thickness: 5/8 inch, unless otherwise indicated

2.5 CEMENTITIOUS BACKER UNITS

A. Provide cementitious backer units complying with ANSI A118.9, of thickness and width indicated below, and in maximum lengths available to minimize end-to-end butt joints. Width: Manufacturer's standard width but not less than 32 inches.

B. Available Products:
Subject to compliance with requirements, cementitious backer units that may be incorporated in the Work include, but are not limited to, the following:

1. DomCrete Cementitious Tile-Backer Board, Domtar Gypsum.

2. Util-A-Crete Concrete Backer Board, FinPan, Inc.

3. Glas-crete Cementitious Backer Board, Glascrete, Inc.

4. Wonder-Board, Glascrete, Inc.

5. DUROCK Interior Cement Board, United States Gypsum Co.

2.6 TRIM ACCESSORIES

A. Accessories for Interior Installation:
Corner beads, edge trim, and control joints complying with ASTM C 1047 and requirements indicated below:

1. Material:
Formed metal, plastic, or metal combined with paper, with metal complying with the following requirement:

a. Sheet steel zinc-coated by hot-dip process.

b. Sheet steel coated with zinc by hot-dip or electrolytic processes, or with aluminum or rolled zinc.

2. Shapes indicated below by reference to Fig. 1 designations in ASTM C 1047:

a. Cornerbead on outside corners, unless otherwise indicated

b. LC-bead with both face and back flanges; face flange formed to receive joint compound. Use LC-beads for edge trim unless otherwise indicated.

c. L-bead with face flange only; face flange formed to receive joint compound. Use L-bead where indicated.

d. U-bead with face and back flanges; face flange formed to be left without application of joint compound. Use U-bead where indicated.

e. One-piece control joint formed with V-shaped slot, with removable strip covering slot opening

2.7 JOINT TREATMENT MATERIALS

A. General:
Provide joint treatment materials complying with ASTM C 475 and the recommendations of both the manufacturers of sheet products and of joint treatment materials for each application indicated.

B. Joint Tape for Gypsum Board:
Paper reinforcing tape, unless otherwise indicated. Use pressure-sensitive or staple-attached open-weave glass-fiber reinforcing tape with compatible joint compound where recommended by manufacturer of Gypsum Board and joint treatment materials for application indicated.

C. Joint Tape for Cementitious Backer Units:
Polymer-coated, open glass-fiber mesh.

D. Setting-Type Joint Compounds for Gypsum Board:
Factory-packaged, job-mixed, chemical-hardening powder products formulated for uses indicated.

1. Where setting-type joint compounds are indicated as a taping compound only or for taping and filling only, use formulation that is compatible with other joint compounds applied over it.

2. For prefilling gypsum board joints, use formulation recommended by Gypsum Board manufacturer for this purpose.

3. For filling joints and treating fasteners of water-resistant Gypsum backing board behind base for ceramic tile, use formulation recommended by the Gypsum Board manufacturer for this purpose.

4. For topping compound, use sand additive formulation.

E. Drying-Type Joint Compounds for Gypsum Board:
Factory-packaged vinyl-based products complying with the following requirements for formulation and intended use.

1. Ready-Mixed Formulation: Factory-mixed product

2. Job-Mixed Formulation: Powder product for mixing with water at Project site

3. Taping compound formulated for embedding tape and for first coat over fasteners and face flanges of trim accessories.

4. Topping compound formulated for fill (second) and finish (third) coats

5. All-purpose compound formulated for both taping and topping compounds.

F. Joint Compound for Cementitious Backer Unit:
Material recommended by cementitious backer unit manufacturer.

2.8 ACOUSTICAL SEALANT

A. Latex Acoustical Sealant:
Manufacturer's standard non-sag, paintable, non-staining latex sealant complying with ASTM C 834 and the following requirements:

1. Product is effective in reducing airborne sound transmission through perimeter joints and openings in building construction as demonstrated by testing representative assemblies per ASTM E 90.

2. Product has flame-spread and smoke-developed ratings of less than 25 per ASTM E 84.

B. Acoustical Sealant for Concealed Joints:
Manufacturer’s standard nondrying, non-hardening, non-skinning, non-staining, gun applied, synthetic rubber sealant recommended for sealing interior concealed joints to reduce transmission of airborne sound.

C. Available Products:

Subject to compliance with requirements, acoustical sealants that may be incorporated in the Work include, but are not limited to, the following:

1. Acoustical Sealant:

   a. AC-20 FTR Acoustical and Insulation Sealant, Pecora Corp.

   b. SHEETROCK Acoustical Sealant, United States Gypsum Co.

2. Acoustical Sealant for Concealed Joints:

   a. BA-98, Pecora Corp.

   b. Tremco Acoustical Sealant, Tremco, Inc.

2.9 MISCELLANEOUS MATERIALS

A. General:
Provide auxiliary materials for gypsum board construction that comply with referenced standards and recommendations of Gypsum Board manufacturer.

B. Laminating Adhesive: Special adhesive or joint compound recommended for laminating Gypsum panels.

C. Spot Grout: ASTM C 475, setting-type joint compound recommended for spot grouting hollow metal door frames.

D. Fastening Adhesive for Wood: ASTM C 557.

E. Fastening Adhesive for Metal: Special adhesive recommended for laminating Gypsum panels to steel framing.

F. Steel drill screws complying with ASTM C 1002 for the following applications:

   1. Fastening Gypsum Board to steel members less than 0.03 inch thick.

   2. Fastening Gypsum Board to wood members.

   3. Fastening Gypsum Board to gypsum board.

G. Steel drill screws complying with ASTM C 954 for fastening gypsum board to steel members from 0.033 to 0.112 inch thick.

H. Corrosion-resistant-coated steel drill screws of size and type recommended by board manufacturer for fastening cementitious backer units.

I. Asphalt-Saturated Organic Felt: ASTM D 226, Type I (No. 15 asphalt felt), unperforated.

J. Sound Attenuation Blankets:

Unfaced mineral-fiber blanket insulation produced by combining mineral fibers of type described below with thermosetting resins to comply with ASTM C 665 for Type I (blankets without membrane facing):

K. Mineral-Fiber Type: Fibers manufactured from glass.

L. Polyethylene Vapor Retarder:
ASTM D 4397, thickness and maximum permeance rating as follows:

1. 4.0 mils, 0.19 perms.

2. 6.0 mils, 0.13 perms.

M. Vapor Retarder Tape:
Pressure-sensitive tape of type recommended by vapor retarder manufacturer for sealing joints and penetrations in vapor retarder.

PART 3 - EXECUTION

3.1 EXAMINATION

Examine substrates to which gypsum board assemblies attach or abut, installed hollow metal frames, cast-in-anchors, and structural framing with Installer present for compliance with requirements for installation tolerances and other conditions affecting performance of assemblies specified in this Section. Do not proceed with installation until unsatisfactory conditions have been corrected.

3.2 PREPARATION

A. Ceiling Anchorages:
Coordinate installation of ceiling suspension systems with installation of overhead structural assemblies to ensure that inserts and other provisions for anchorages to building structure have been installed to receive ceiling hangers that will develop their full strength and at spacing required to support ceilings. Furnish concrete inserts and other devices indicated to other trades for installation well in advance of time needed for coordination with other construction.

3.3 INSTALLING STEEL FRAMING, GENERAL

A. Steel Framing Installation Standard: Install steel framing to comply with ASTM C 754 and with ASTM C 840 requirements that apply to framing installation.

B. Install supplementary framing, blocking, and bracing at terminations in Gypsum Board assemblies to support fixtures, equipment services, heavy trim, grab bars, toilet accessories, furnishings, or similar construction. Comply with details indicated and with recommendations of gypsum board manufacturer or, if unavailable, with "Gypsum Construction Handbook" published by United States Gypsum Co.

C. Isolate steel framing from building structure at locations indicated to prevent transfer of loading imposed by structural movement. Comply with details shown on Drawings.

1. Where building structure abuts ceiling perimeter or penetrates ceiling.

2. Where partition framing and wall furring abut structure except at floor.

3. Provide slip- or cushioned-type joints as detailed to attain lateral support and avoid axial loading.

D. Do not bridge building expansion and control joints with steel framing or furring members. Independently frame both sides of joints with framing or furring members as indicated.

3.4 INSTALLING STEEL FRAMING FOR SUSPENDED AND FURRED CEILINGS

A. Suspend ceiling hangers from building structural members and as follows:

1. Install hangers plumb and free from contact with insulation or other objects within ceiling plenum that are not part of supporting structural or ceiling suspension system. Splay hangers only where required to miss obstructions and offset resulting horizontal forces by bracing, counter-splaying, or other equally effective means.

2. Where width of ducts and other construction within ceiling plenum produces hanger spacings that interfere with the location of hangers required to support standard suspension system members, install supplemental suspension members and hangers in form of trapezes or equivalent devices. Size supplemental suspension members and hangers to support ceiling loads within performance limits established by referenced standards.

3. Secure wire hangers by looping and wire-tying, either directly to structures or to inserts, eye-screws, or other devices and fasteners that are secure and appropriate for substrate, and in a manner that will not cause them to deteriorate or otherwise fail due to age, corrosion, or elevated temperatures.

4. Secure flat, angle, channel, and rod hangers to structure, including intermediate framing members, by attaching to inserts, eye-screws, or other devices and fasteners that are secure and appropriate for structure as well as for type of hanger involved, and in a manner that will not cause them to deteriorate or fail due to age, corrosion, or elevated temperatures.

5. Do not support ceilings directly from permanent metal forms. Furnish cast-in-place hanger inserts that extend through forms.

6. Do not attach hangers to steel deck tabs.

7. Do not attach hangers to steel roof deck. Attach hangers to structural members.

8. Do not connect or suspend steel framing from ducts, pipes or conduit.

B. Sway-brace suspended steel framing with hangers used for support.

C. Install suspended steel framing components in sizes and at spacing indicated but not less than that required by the referenced steel framing installation standard.

1. Wire Hangers: 0.1620-inch (8-gage) diameter, 4 feet O.C.

2. Carrying Channels (Main Runners)): 1-1/2 inch, 4 feet O.C.

3. Rigid Furring Channels (Furring Members): 16 inches O.C.

D. Installation Tolerances:
Install steel framing components for suspended ceilings so that cross-furring members or grid suspension members are level to within 1/8 inch in 12 feet as measured both lengthwise on each member and transversely between parallel members.

E. Wire-tie or clip furring members to main runners and to other structural supports as indicated.

F. Grid Suspension System: Attach perimeter wall track or angle where grid suspension system meets vertical surfaces. Mechanically join main beam and cross-furring members to each other and butt-cut to fit into wall track.

G. For exterior soffits, install cross-bracing and additional framing to resist wind uplift according to details on Drawings.

3.5 INSTALLING STEEL FRAMING FOR WALLS AND PARTITIONS

A. Install runners (tracks) at floors, ceilings, and structural walls and columns where Gypsum Board stud assemblies abut other construction. Where studs are installed directly against exterior walls, install asphalt felt strips between studs and wall.

B. Installation Tolerances:
Install each steel framing and furring member so that fastening surfaces do not vary more than l/8 inch from the plane formed by the faces of adjacent framing.

C. Extend partition framing full height to structural supports or substrates above suspended ceilings, except where partitions are indicated to terminate at suspended ceilings. Cut studs 1/2 inch short of full height. Continue framing over frames for doors and openings and frame around ducts penetrating partitions above ceiling to provide support for gypsum board. For STC-rated and fire-resistive-rated partitions requiring partitions to extend to the underside of floor/roof slabs and decks or other continuous solid structural surfaces to obtain ratings, install framing around structural and other members extending below floor/roof slabs and decks, as needed, to support gypsum board closures needed to make partitions continuous from floor to underside of solid structure.

D. Terminate partition framing at suspended ceilings where indicated.

E. Install steel studs and furring in sizes and at spacing indicated but not less than that required by the referenced steel framing installation standard to comply with maximum deflection and minimum loading requirements specified.

1. Single Layer Construction: Space studs at 24 inches O.C.

2. Single and Double-Layer Construction: Space studs at 24 inches O.C.

F. Install steel studs so that flanges point in the same direction and so that leading edges or ends of each gypsum board can be attached to open (unsupported) edges of stud flanges first.

G. Frame door openings to comply with details indicated, with GA-219, and with applicable published recommendations of gypsum board manufacturer. Attach vertical studs at jambs with screws either directly to frames or to jamb anchor clips on door frames; install runner track section (for cripple studs) at head and secure to jamb studs. Extend vertical jamb studs through suspended ceilings and attach to underside of floor or roof structure above.

H. Frame openings other than door openings to comply with details indicated or, if not indicated, in same manner as required for door openings. Install framing below sills of openings to match framing required above door heads.

I. Install thermal insulation as follows:

1. Erect insulation vertically and hold in place with Z-furring members spaced 24 inches O.C.

2. Except at exterior corners, securely attach narrow flanges of furring members to wall with concrete stub nails, screws designed for masonry attachment, or powder-driven fasteners spaced 24 inches O.C.

3. At exterior corners, attach wide flange of furring members to wall with short flange extending beyond corner; on adjacent wall surface, screw attach short flange of furring channel to web of attached channel. Start from this furring channel with standard width insulation panel and continue in regular manner. At interior corners, space second member no more than 12 inches from corner and cut insulation to fit.

4. Until gypsum board is installed, hold insulation in place with 10-inch staples fabricated from 0.0625-inch (16-gage)-diameter tie wire and inserted through slot in web of member.

J. Install polyethylene vapor retarder where indicated to comply with the following requirements:

1. Extend vapor retarder to extremities of areas to be protected from vapor transmission. Secure in place with mechanical fasteners or adhesives. Extend vapor retarder to cover miscellaneous voids in insulated substrates, including those filled with loose mineral-fiber insulation.

2. Seal vertical joints in vapor retarders over framing by lapping not less than two wall studs. Fasten vapor retarders to framing at top, end, and bottom edges, at perimeter of wall openings, and at lap joints; space fasteners 16 inches O.C.

3. Seal joints in vapor retarders caused by pipes, conduits, electrical boxes and similar items penetrating vapor retarders with vapor retarder tape.

4. Repair any tears or punctures in vapor retarder immediately before concealing it with the installation of gypsum board or other construction.

3.6 APPLYING AND FINISIDNG GYPSUM BOARD, GENERAL

A. Gypsum Board Application and Finishing Standards:
Install and finish Gypsum panels to comply with ASTM C 840 and GA-216.

B. Install sound attenuation blankets where indicated prior to installing gypsum panels unless blankets are readily installed after panels have been installed on one side.

C. Install ceiling board panels across framing to minimize the number of abutting end joints and avoid abutting end joints in the central area of each ceiling. Stagger abutting end joints of adjacent panels not Jess than one framing member.

D. Install wall/partition board panels to minimize the number of abutting end joints or avoid them entirely. Stagger abutting end joints not less than one framing member in alternate courses of board. At high walls, install panels horizontally with end abutting joints over studs and staggered.

E. Install Gypsum panels with face side out. Do not install imperfect, damaged, or damp panels. Butt panels together for a light contact at edges and ends with not more than 1/16 inch of open space between panels. Do not force into place.

F. Locate both edge or end joints over supports, except in ceiling applications where intermediate supports or gypsum board back-blocking is provided behind end joints. Position adjoining panels so that tapered edges abut tapered edges, and field-cut edges abut field-cut edges and ends. Do not place tapered edges against cut edges or ends. Stagger vertical joints over different studs on opposite sides of partitions. Avoid joints at corners of framed openings where possible.

G. Attach gypsum panels to steel studs so that the leading edge or end of each panel is attached to open (unsupported) edges of stud flanges first.

H. Attach gypsum panels to framing provided at openings and cutouts.

I. Spot grout hollow metal door frames for solid core wood doors, hollow metal doors, and doors over 32 inches wide. Apply spot grout at each jamb anchor clip and immediately insert Gypsum panels into frames.

J. Form control joints and expansion joints at locations indicated and as detailed, with space between edges of adjoining Gypsum panels, as well as supporting framing behind Gypsum panels.

K. Cover both faces of steel stud partition framing with Gypsum panels in concealed spaces (above ceilings, etc.), except in chase walls that are braced internally.

   1. Except where concealed application is indicated or required for sound, fire, air, or smoke ratings, coverage may be accomplished with scraps of not less than 8 sq. ft. in area.

   2. Fit Gypsum panels around ducts, pipes, and conduits.

   3. Where partitions intersect structural members projecting below underside of roof decks, cut gypsum panels to fit profile formed by coffers, joists, and other structural members; allow 1/4- to-1/2-inch-wide joints to install sealant.

L. Isolate perimeter of non-load-bearing gypsum board partitions at structural abutments as detailed and required. Provide 1/4-inch wide spaces at these locations and trim edges with U-bead edge trim where edges of gypsum panels are exposed. Seal joints between edges and abutting structural surfaces with acoustical sealant.

M. Where STC-rated gypsum board assemblies are indicated, seal construction at perimeters, behind control and expansion joints, openings, and penetrations with a continuous bead of acoustical sealant including a bead at both faces of the partitions. Comply with ASTM C 919 and manufacturer's recommendations for location of edge trim and closing off sound-flanking paths around or through Gypsum Board assemblies, including sealing partitions above acoustical ceilings.

N. Space fasteners in gypsum panels according to referenced gypsum board application and finishing standard and manufacturer's recommendations.

3.7 GYPSUM BOARD APPLICATION METHODS

A. Single-Layer Application:
Install Gypsum wallboard panels as follows:

1. On ceilings, apply Gypsum panels prior to wall/partition board application to the greatest extent possible and at right angles to framing, unless otherwise indicated.

2. On partitions/walls, apply gypsum panels vertically (parallel to framing), unless otherwise indicated, and provide panel lengths that will minimize end joints.

3. On partitions/walls, apply gypsum panels horizontally (perpendicular to framing), unless parallel application is required for fire-resistive-rated assemblies. Use maximum-length panels to minimize end joints.

B. Wall Tile Substrates:
For substrates indicated to receive thin-set ceramic tile and similar rigid applied wall finishes, comply with the following:

1. Install cementitious backer units at showers and where indicated to comply with ANSI A108.11.

2. Install Gypsum wallboard panels with tapered edges taped and finished to produce a flat surface except at showers and other locations indicated to receive water-resistant panels.

C. Single-Layer Fastening Methods:
Apply gypsum panels to supports as follows: Fasten with screws.

3.8 INSTALLING TRIM ACCESSORIES

A. General:
For trim accessories with back flanges, fasten to framing with the same Fasteners used to fasten gypsum board. Otherwise, fasten trim accessories according to accessory manufacturer's directions for type, length, and spacing of fasteners.

B. Install corner beads at external corners.

C. Install edge trim where edge of gypsum panels would otherwise be exposed or semi-exposed. Provide edge trim type with face flange formed to receive joint compound except where other types are indicated.

1. Install LC-bead where gypsum panels are tightly abutted to other construction and back flange can be attached to framing or supporting substrate.

2. Install L-bead where edge trims can only be installed after gypsum panels are installed.

3. Install U-bead where indicated.

3.9 FINISHING GYPSUM BOARD ASSEMBLIES

A. General:
Apply joint treatment at gypsum board joints (both directions); flanges of corner bead, edge trim, and control joints; penetrations; fastener heads, surface defects, and elsewhere as required to prepare gypsum board surfaces for decoration and levels of gypsum board finish indicated.

B. Prefill open joints, rounded or beveled edges, and damaged areas using setting type joint compound.

C. Apply joint tape over gypsum board joints except those with trim accessories having concealed face flanges not requiring taping to prevent cracks from developing in joint treatment at flange edges.

D. Apply joint tape over gypsum board joints and to trim accessories with concealed face flanges as recommended by trim accessory manufacturer and as required to prevent cracks from developing in joint compound at flange edges.

E. Levels of Gypsum Board Finish:
Provide the following levels of gypsum board finish per GA-214:

1. Level 1 for ceiling plenum areas, concealed areas, and where indicated, unless a higher level of finish is required for fire-resistive-rated assemblies and sound-rated assemblies.

2. Level 2 where water-resistant gypsum backing board panels form substrates for tile, and where indicated.

3. Level 3 for gypsum board surfaces indicated to receive medium- or heavy-textured finishes before painting.

4. Level 4 for gypsum board surfaces indicated to receive light-textured finishes, wallcoverings, and flat paints over light textures.

F. For level 4 gypsum board finish, embed tape in finishing compound plus two separate coats applied over joints, angles, fastener heads, and trim accessories using one of the following combinations of joint compounds (not including prefill), and sand between coats and after last coat.

G. Where level 3 gypsum board finish is indicated, apply joint compounds specified for first and second coat in addition to embedding coat.

H. Where level 2 gypsum board finish is indicated, apply joint specified for first coat in addition to embedding coat.

I. Where level 1 gypsum board finish is indicated, apply joint compound specified for embedding coat.

J. Finish cementitious backer units to comply with unit manufacturer's directions.

3.10 CLEANING AND PROTECTION

A. Promptly remove any residual joint compound from adjacent surfaces.

B. Provide final protection and maintain conditions, in a manner suitable to Installer that ensures gypsum board assemblies remain without damage or deterioration at time of Substantial Completion.

END OF SECTION

PART 1 - GENERAL

1.1 SUMMARY

A. Interior Tile:

1. Wall tile over tile backer board at wet areas.
2. Wall tile over concrete and concrete masonry units.
3. Floor tile over concrete slab.

B. Remodeling of existing tile work.

1.2 SUBMITTALS

A. Submit for approval samples, product data, and mock-ups.

1.3 QUALITY ASSURANCE

A. Comply with governing codes and regulations. Provide products of acceptable manufacturers which have been in satisfactory use in similar service for three years. Use experienced installers. Deliver, handle, and store materials in accordance with manufacturer's instructions.

B. Tile Materials: ANSI 118 series standard specifications.

C. Tile Installation:
ANSI 108 series standard specifications and Tile Council of America, Handbook for Ceramic Tile Installation.

PART 2 - PRODUCTS

2.1 MATERIALS

A. Manufacturers of Tile:
American Olean, Dal-Tile, Summitville Tiles, United States Ceramic Tile Co. or approved equal.

B. Manufacturers of Setting Materials:
American Olean, Bostic Construction Products, Laticrete, Mapei Corp or approved equal.

C. Glazed Wall Tile:

1. Type: Interior type body, flat tile
2. Face: 6 by 18 inches
3. Thickness: 5/16 inch nominal thickness
4. Face: Plain face with modified square edge.

D. Unglazed Paver Tile:

1. Type: Porcelain flat tile
2. Size: 6 by 36
3. Thickness: 1/2 inch nominal
4. Face: Plain face with square edges.

E. Glazed Paver Tile:

1. Type: Porcelain flat tile
2. Size: 6 by 36
3. Thickness: 1/2 inch nominal
4. Face: Plain face with square edges.

F. Tile Accessories:

1. Matching trim units.
2. Marble thresholds.
3. Stone thresholds.
4. Ceramic toilet accessories.

G. Setting Materials:

1. Latex-Portland cement mortar, ANSI A118.
2. Chemical-resistant epoxy adhesive, ANSI A118.

H. Grout:

1. Latex-Portland cement grout, ANSI A118.6.
2. Chemical-resistant epoxy grout, ANSI A118.

I. Setting Accessories:

1. Membrane waterproofing under tile.
2. Cementitious tile backer board.

J. Elastomeric Sealants:

1. One-part mildew-resistant silicone sealant for non-traffic areas.

2. Multi-part pourable urethane sealant for traffic areas.

3. Chemical-resistant sealant at chemical-resistant flooring.

PART 3 - EXECUTION

3.1 INSTALLATION

A. Comply with Tile Council of America and ANSI Standard Specifications for Installation for substrate and installation required. Comply with manufacturer's instructions and recommendations.

B. Lay tile in grid pattern with alignment grids. Layout to provide uniform joint widths and to minimize cutting; do not use less than 1/2 tile units.

C. Provide sealant joints where recommended by TCA and approved by Owner's Representative.

D. Grout and cure, clean and protect.

3.2 SCHEDULE

A. Tile Schedule:

1. Toilet Room Walls:
Glazed wall tile over masonry or cementitious backer unit with thin-set latex modified cement mortar and latex-Portland cement grout.

2. Toilet Room Floors:
Unglazed paver tile over concrete slab or wood decking with chemical resistant adhesive, latex Portland cement mortar and chemical resistant grout.

3. Other Areas:
Glazed paver tile over concrete slab or wood decking with chemical resistant adhesive, latex Portland cement mortar and chemical resistant grout.

END OF SECTION

PART 1 - GENERAL

1.1 SUMMARY

A. Related Documents:

1. Drawings and general provisions of the Subcontract apply to this Section.

2. Review these documents for coordination with additional requirements and information that apply to work under this Section.

B. Section Includes:

1. Acoustical surfaces including acoustic lay-in panels, grid systems, and required installation accessories.

C. Tie-in to existing grid system.

D. Seismic bracing of existing grid system.

E. Seismic safety wires for light fixtures.

F. Related Sections:

1. Division 01 Section "General Requirements."

2. Division 01 Section "Special Procedures."

3. Division 01 Section "Construction Waste Management."

4. Division 01 Section "Lateral Force Procedures".

5. Division 07 Section "Blanket Insulation" for acoustical insulation blankets in partitions and ceilings.

6. Division 09 Section "Painting" for field painting of lay-in panels.

7. Division 23 Sections for acoustical duct liners, sound insulated metal plenum walls, vibration isolating supports for mechanical equipment, fire sprinklers and similar items of mechanical equipment mounted on or in acoustical surfaces.

8. Division 26 Sections for:

a. Light fixtures, smoke detectors and similar items of electrical equipment mounted in or on acoustical surfaces.

b. Furnishing and installation of safety wires for recessed lighting fixtures.

1.2 REFERENCES

A. General:

1. The following documents form part of the Specifications to the extent stated. Where differences exist between codes and standards, the one affording the greatest protection shall apply.

2. Unless otherwise noted, the referenced standard edition is the current one at the time of commencement of the Work.

3. Refer to Division 01 Section "General Requirements" for the list of applicable regulatory requirements.

B. ASTM International:

1. ASTM C635 - Metal Suspension Systems for Acoustical Tile and Lay-in Panel Ceilings.

2. ASTM C636- Installation of Metal Ceiling Suspension Systems -Acoustical Tile and Lay-in Panels.

C. California Building Code (CBC) - conform to combustibility requirements for materials.

D. CBC Chapters 16 and 25 and CBC Standard No. 25-2 for the design, details and specifications for lateral bracing requirements as modified by Division 01 Section "Lateral Force Procedures".

E. Ceilings & Interior Systems Construction Association:

1. Ceiling Systems Handbook

2. Guidelines for Seismic Restraint of Direct-Hung Suspended Ceiling Assemblies-Seismic Zones 3 & 4

F. UL- Underwriter's Laboratories System Ratings.

1.3 SUBMITTALS

A. Submit under provisions of Division 01 Section "General Requirements."

B. Product Data:

1. Manufacturer's specifications, installation instructions and product data on metal grid system components, acoustical units, and all other products to be used.

2. Approved ICBO report for fasteners proposed to be used to attach acoustical ceilings to building superstructure.

C. Shop Drawings:
Show grid layout and dimensioning, panel layouts, lighting fixtures, air diffusers, grilles, and all other items exposed in acoustical ceilings, locations of seismic braces and hangers, and suspension, seismic and bracing details. Show details of junctions with other work or ceiling finishes, and special conditions.

D. Calculations showing that suspension systems will provide full compliance with seismic structural requirements of Division 0l Section "Lateral Force Procedures". Calculations shall be checked and sealed by a Civil or Structural Engineer licensed in the State of California.

E. Samples:

1. Acoustic panels of each type- 6 by 6 inches (150 by 150 mm) minimum.

2. Grid system components, including suspension system main runner, cross runner, edge trim, and all special shapes, in 12 inches (300 mm) lengths.

1.4 QUALITY ASSURANCE

A. Installer's Qualifications: 5 years minimum experience with and specializing in acoustical ceilings installations.

1.5 DELIVERY, STORAGE, AND HANDLING

A. Deliver materials to project site in original, undamaged, unopened containers bearing manufacturer's name, style, color and product number of each type of material.

B. Comply with manufacturer's recommendations for storage of materials to be used in the work.

1.6 ENVIRONMENTAL REQUIREMENTS

A. Unless otherwise required by the manufacturers of the materials, temperatures are to be maintained at 60 degrees F. or higher, and humidity at 20 to 40 percent, prior to, during and after installation.

1.7 SEQUENCING AND SCHEDULING

A. Do not install acoustical ceilings until building is enclosed, sufficient heat is provided, dust-generating activities have terminated, and overhead work is completed, tested and approved. Schedule installation of acoustic units after interior wet work is dry.

1.8 EXTRA MATERIALS

A. Upon completion of work, deliver stock of replacement materials of acoustical panels used in the work to the Project Manager. Furnish at least 3 percent extra panels, of full-size units of each type, color and pattern of acoustical panel installed. Package extra materials in manufacturer's standard, sealed, unopened boxes, labeled with manufacturer's name, style, number and color of unit, local distributor's name, address and telephone number, and locations where installed in Project.

PART 2 - PRODUCTS

2.1 ACOUSTICAL PANEL (AP) MATERIALS

A. Type AP 1 panels are specified for offices and corridors where dusting and ease of cleaning are not Issues.

1. USG "Millennia", 3/4 inches (19 mm) thick, 24 by 24 inches (600 mm x 600 mm), square edge, white, mineral fiber, Class A, CAC range 35-39, NRC Range 0.65-0.75.

B. Type AP 2 panel is specified for computer rooms and laboratories where dusting and ease of cleaning are issues.

1. USG "Clean Room Class 100", Celotex, Capaul or equal, 5/8 inches (16 mm) thick, 24 by 24 inches (600 mm x 600 mm), vinyl wrapped moisture resistant mineral fiber, square edges, STC 40- 44.

a. Class A material with a flame spread not exceeding 25 and a smoke developed rating not exceeding 50 when tested in accord with ASTM E84.

2.2 GRID SUSPENSION SYSTEM (GS)

A. Manufacturers:

1. Chicago Metallic Corp.

2. Donn, Eastern

3. National Rolling Mills.

4. Approved Equal

B. System Description:
Systems shall be of steel construction as per CBC Standard 25-2 and shall consist of main and cross runners, perimeter trim, connectors, hangers and all accessories necessary for the complete installation.

1. All systems shall permit the installation of recessed lighting fixtures upon the flanges of the systems and any form of splice or other obstruction which would inhibit or render such installation of fixtures difficult will not be permitted.

2. Each intersection, splice and perimeter joint shall meet all seismic requirements of CBC Standard 25-2.

C. Finish:
Factory finished white baked enamel over bonderized, electro-zinc-coated steel.

D. Main and Cross Runners:

1. GS 1:
15/16-inch (23 mm) flange suspension system, heavy-duty steel, grid module to suit panel size. Include 15/16 inch (23 mm) wide perimeter trim members with shadow reveal.

2. GS 2:
9/16-inch (14 mm) flange narrow suspension system, intermediate duty steel, grid module to suit lay-in panel size. Include 9116 inch (14 mm) wide perimeter trim members.

E. Connectors and Clips:
Manufacturer's standard

F. Hanger and Bracing Wires:
Fed. Spec. QQ-W-461, Class 1, galvanized and annealed, 12 gauge minimum

G. Fasteners:
Fasteners used for attachment of acoustical ceilings to building structure shall have an approved ICBO report.

H. Edge Sealer:
Latex adhesive designed for the purpose of sealing field-cut edges of acoustic panels, as manufactured by Kelly-Moore, Inc., or equal

PART 3 - EXECUTION

3.1 EXAMINATION

A. Surfaces shall be dry and wet work completed prior to commencing installation. Inspect surfaces to receive acoustical work and report any defects. Starting work implies acceptance of surfaces and existing conditions.

B. Verify that plenum surfaces are free of dirt, dust and loose construction soil and that construction work is otherwise complete, equipment installed and that surfaces and openings which might provide "leaks" are sealed prior to commencing installation of ceiling assembly.

3.2 INSTALLATION

A. Coordinate installation with other trades whose work adjoins or combines with acoustical ceilings. Unless otherwise shown, equipment, fixtures, etc., applied on or within acoustical panels are to be located symmetrically with respect to both axes. Provide grid members required to accommodate lay-in air diffusers and similar items of mechanical equipment.

B. Except as otherwise specified to meet structural requirements, make installation of grid systems and acoustical materials in strict accordance with approved manufacturer's specifications or recommendations and Drawing details. Where details and/or these Specifications are in apparent conflict with manufacturer's recommendations, the more stringent requirement shall apply.

C. Grid Suspension Systems:

1. Structural Requirements:

a. Brace [new and existing] suspension to comply with CBC requirements a governing resistance to lateral forces and uplift as modified by Division 01 Section "Lateral Force Procedures".

b. Attachment to Building Superstructure: Install fasteners used to attach grid suspension system to building superstructure in accordance with the requirements of their approved ICBO report.

i. Install suspension systems in flat, level plane unless otherwise shown, joints in exposed members tight and aligned without offsets. Direction of main runners, where not specifically indicated, shall be determined by fixture layout.

ii. Unless closer spacing is required by manufacturer of system, space hanger wires along main runners at 4 feet (1.2 m) maximum. Provide special hangers as required where items above ceiling obstruct normal hanger wires.

iii. Provide hold-down clips for lay-in panels where required to prevent lifting and flutter caused by air pressures.

iv. Install perimeter trim at wall and abutting vertical surfaces. Flange of trim shall be at the same level as flanges of main and cross runners.

v. Level suspension systems to a tolerance of l/8 inches (3 mm) in 12 feet (3.6 m).

D. Unless otherwise shown on reflected ceiling plans, align grid members and tile joints parallel to perimeter walls with pattern centered in room areas both directions.

E. Seal field-cut panel edges of Type AP 2 panels with edge sealer.

3.3 PROTECTION

A. Protect the finished installation from damage during balance of construction period. Remove any soiled or damaged items and replace with new before acceptance of Project by LBNL.

3.4 WASTE MANAGEMENT

A. Recycle unused acoustic ceiling tile in accordance with the requirements of Division 01 “Construction Waste Management."

END OF SECTION

PART 1 - GENERAL

1.1 SUMMARY

A. Section Includes:
Application of lime remover and three coats of silicate coating over water repellency. Specification includes surface preparation.

B. Related Sections include the following:

1. Section 09253 - Salt-Retaining Water Repellent Renovation Stucco

1.2 REFERENCES

A. General:
The publications listed below form a part of this Specification to the extent referenced. The publications are referred to in the text by the basic designation only.

B. ASTM (ASTM):

1. ASTM E 96, "Standard Test Methods for Water Vapor Transmission of Materials."

2. ASTM E 514, "Standard Test Method for Water Penetration and Leakage Through Masonry."

3. ASTM G 154, "Standard Practice for Operating Fluorescent Light Apparatus for UV Exposure of Nonmetallic Materials."

C. Deutsches lnstitut fur Normung (DIN), European Standard (EN), and International Organization for Standardization (ISO):

1. DIN 18 363 2.4.1, manufacturing standard for silicate paint.

2. DIN EN 13 300, manufacturing standard for interior silicate paint.

3. DIN EN 1062, manufacturing standard for sol silicate paint.

4. ISO 11998, "Paints and varnishes - Determination of wet-scrub resistance and clean ability of coatings."

5. ISO 6504-3, "Paints and varnishes- Determination of hiding power- Part 3: Determination of contrast ratio of light-colored paints at a fixed spreading rate."

6. ISO 2813, "Paints and varnishes - Determination of specular gloss of non-metallic paint films at 20 degrees, 60 degrees and 85 degrees."

7. EN 1062-3, "Paints and varnishes- Coating materials and coating systems for exterior masonry and concrete- Part 3: Determination of liquid water permeability."

8. DIN EN 1504-2, "Products and systems for the protection and repair of concrete structures- Definitions, requirements, quality control and evaluation of conformity - Part 2: Surface protection systems for concrete."

9. DIN EN ISO 7783-2, "Coating materials and coating systems for exterior masonry and concrete – Part 2: Determination and classification of water-vapor transmission rate (permeability)."

10. DIN 4102-A2, "Fire Behavior of Building Materials and Building Components- Part 2: Building Components; Definitions, Requirements and Tests."

11. DIN 18363, "Construction Contract Procedures (VOB) Part C: General Technical Specifications in Construction Contracts (ATV) Painting and Varnishing."

1.3 DEFINITIONS

A. Lime remover: A liquid silicic acid.

B. Water repellency:
A water repelling liquid that is applied to mineral surfaces prior to the application of the silicate base coat.

C. Silicate coating base coat: The first applied coat of the silicate coating.

D. Silicate coating, intermediate coat:
The second applied coat of the silicate coating. E. Silicate coating, top coat: The third applied coat of the silicate coating.

E. Dilution: A silicate based diluent.

1.4 SYSTEM DESCRIPTION

A. A materials-compatible highly vapor permeable decorative coating system offering severe weathering protection for exterior exposure. Install over mineral surfaces.

1. Lime Remover:
A silicic acid based cleaner used to open sinter layers on rendered plaster surfaces to ensure they are absorbent. May be used to remove lime efflorescence and calcium carbonate deposits from mineral surfaces.

2. Water Repellency:
A solvent-free liquid silane that is drawn into the capillaries of the substrate and by chemical reaction forms a micro-thin silica gel coating within repelling liquid water and salt ions by reducing surface tensions while maintaining substrate vapor permeability.

3. Silicate Coating:

An incombustible three coat system with UV and alkaline resistant inorganic pigments in the specified color with biocides. Coatings penetrate the surface and in a chemical reaction with the substrate results in covalent bonds forming a hard amorphous microporous layer with extremely high vapor permeability that is unaffected by acids, UV exposure, or air-borne pollutants. Provides weathering protection without reducing substrate vapor permeability.

1.5 SUBMITTALS

A. Product Data:
Submit product data showing material proposed. Submit sufficient information to determine compliance with the Drawings and Specifications. Provide published documentation describing materials, characteristics, and limitations.

B. Samples:
Submit samples for verification purposes, fabrication techniques and workmanship.

C. Manufacturer's Instructions:
Submit manufacturer's instructions including technical data sheets, material safety data sheets, mixing instructions, application requirements, special procedures, and conditions requiring special attention.

D. LEED Submittals:
Submittals that are required to comply with requirements for LEED certification include the following:

1. Low Emitting Materials:
Submit certification by the manufacturer confirming that products (i.e., adhesives, sealants, paints, coatings, etc.) meet or exceed the volatile organic compound (VOC) limits set by specific agencies or other requirements. Clearly state VOC limits in the submittal.

1.6 QUALITY ASSURANCE

A. Qualifications:

1. Manufacturer Qualifications:
Provide evidence that Manufacturer is a firm engaged in the manufacture of silicate coatings of types required, and whose products have been in satisfactory use in similar service for a minimum of ten years.

2. Applicator Qualifications:

a. Provide evidence Applicator is a firm having a minimum of three years of successful application experience with projects similar in type and scope to that required for this Project and approved by the manufacturer.

B. Mockups:

Prior to application of the work, fabricate and erect mockups for each type of finish and application to verify selections made under sample submittals and to demonstrate aesthetic effects as well as qualities of materials and execution. Build mockups to comply with the following requirements using materials indicated for final unit of work. Locate mockups as directed by the Owner's Representative. Demonstrate the proposed range of aesthetic effects and workmanship to be expected in the completed work. Obtain the Owner's Representative's acceptance of mockups before start of final unit of work.

1. Retain and maintain mock ups during construction in undisturbed condition as a standard for judging completed unit of work.

1.7 DELIVERY, STORAGE, AND HANDLING

A. Deliver materials to the Project site in supplier's or manufacturer's original wrappings and containers, labeled with manufacturer's name, material and product brand name, and lot number, if any.

B. Store materials in their original undamaged packages and containers inside a well-ventilated area protected from weather, moisture, soiling, extreme temperatures, and humidity.

1.8 PROJECT CONDITIONS

A. Environmental Requirements:

1. Substrate and ambient air temperature must be under 86° F (30 °C). Maintain temperature during and after application.

2. Do not apply when rain is expected, in high winds, or onto hot substrates.

1.9 WARRANTY

A. Warranty period from date of Substantial Completion is 15 years.

PART 2 - PRODUCTS

2.1 MANUFACTURERS

A. Basis of Design:
Items specified are to establish a standard of quality for design, function, materials, compatibility, performance, warranty, and appearance. Equivalent products by listed manufacturers are acceptable. The Owner's Representative is the sole judge of the basis of what is equivalent.

B. KEIM Mineral Coatings of America, Inc., 10615 Texland Blvd. #600, Charlotte, North Carolina 28273. Telephone 704-588-4811. Email keim-info@keim.com.

2.2 MATERIALS

A. Lime Remover:
Silicic acid-based cleaner that is diluted with water that reacts immediately upon application. No VOC.

1. Basis of Design:
"KEIM Lime Remover", KEIM Mineral Coatings of America, Inc.

B. Water Repellency:
A solvent-free silane based proprietary water repellent with 100% active ingredient. Produces a silica gel micro-coating within the capillaries of the substrate by a chemical reaction with the humidity of the air and of the substrate. The silica gel coating breaks surface tensions preventing water and salts migration yet maintains water vapor diffusion of substrate. Less than 10 g/l VOC.

1. Basis of Design:
"KEIM Silan 100", K.EIM Mineral Coatings of America, Inc.

C. Silicate Coating, Base Coat, Intermediate Coat, and Top Coat:
Provide silicate based opaque coating meeting or conforming to:

1. DIN 18 363 2.4.1, manufacturing standard for silicate paint.

2. DIN EN 1504-2/2.2, Products and systems for the protection and repair of concrete structures/Surface protection systems for concrete.

3. DIN 4102-A2, non-flammable standard- will not burn.

4. ASTM E 96 Vapor Permeability- 83 perms.

5. ASTM G 154 Accelerated Weathering- no fading, cracking, peeling.

6. ASTM E 514 62-MPH Wind-Driven Rain Test - no water penetration.

7. With biocides.

8. Less than gram I per liter VOC (Volatile Organic Content).

9. Basis of Design:
"KEIM Royalan", KEIM Mineral Coatings of America, Inc.

D. Dilution for Silicate Coating:
Provide silicate dilution meeting or conforming to:

1. DIN 4102-A2, non-flammable standard- will not burn.

2. ASTM E 96 Vapor Permeability- 83 perms.

3. Less than l gram per liter VOC (Volatile Organic Content).

4. Basis of Design:
"KEIM Royalan Dilution", KEIM Mineral Coatings of America, Inc.

2.3 EQUIPMENT

A. Tools:

1. Lime Remover: Apply by brush or Hudson style sprayer, rinse off with low pressure spray.

2. Water Repellency: Apply by natural bristle brush, roller, or low-pressure Hudson-style sprayer.

3. Silicate Coating, Base Coat, Intermediate Coat, and Top Coat:
Apply by natural bristle facade brush, professional roller, or professional airless spray equipment and back-roll as required for even distribution.

2.4 FINISHES

A. Lime Remover:
Leave surface clean from removed particles.

B. Silicate Coating; Base Coat, Intermediate Coat, and Top Coat:
Apply evenly to a smooth mineral matte finish without lap lines, voids, "holidays", or drips.

PART 3 - EXECUTION

3.1 EXAMINATION

A. Verification of Conditions:
Confirm by examination the areas and conditions under which the work is to be applied for compliance with manufacturer's instructions. Do not proceed with the work until unsatisfactory conditions have been corrected.

1. Verify substrate is secure, sound, dry, and absorbent, and free of dirt, grease, salts, oil-based paints, release agents, curing agents, and other bond breakers.

2. Pressure wash surfaces exposed to airborne salts or sea water with plenty of clean water.

3. Verify substrate has no pretreatments or priming materials applied.

4. Verify Renovation Stucco finish coat has cured minimum l 0 days.

5. Verify other materials to be coated are fully cured to manufacturer recommendations.

6. Beginning of the work shall indicate acceptance of the areas and conditions as satisfactory by the Applicator.

3.2 PREPARATION

A. Protection:
Lay ground cloths and take measures as necessary to protect surfaces subject to contact by products specified by this Section.

3.3 APPLICATION

A. Conform to reviewed product data, manufacturer’s written instructions, and provisions of the Contract Documents.

B. Plan the work properly.

1. Work ahead of the sun on shaded facades.

2. Work to logical stopping points (corners, seams, architectural features, etc.).

3. Apply coatings maintaining a wet edge to desired finish as indicated in FINISHES Article.

4. Protect from wind and rain prior to, during, and for a minimum 24 hours after application.

C. Lime Remover:

1. Brush off visible salt formations (efflorescence).

2. Dampen renovation stucco base coat patches and fills with clean water. When dry to touch yet still visibly damp, proceed with lime remover.

3. Dilute lime remover l:3 with clean water (l part lime remover to 3 parts clean water.)

4. Apply to Renovation Stucco finish coat surfaces from bottom working to the top. Reaction is immediate.

5. Rinse treated areas with clean water from bottom to top and back down to prevent loosened particles from depositing into the surface.

6. Allow surfaces to completely dry out and inspect for salt efflorescence. Should efflorescence reappear remove with clean water rinsing from bottom of facade to top and back down. Repeat until efflorescence does not reappear.

D. Water Repellency:

1. Apply to saturation by flooding over substrate.

2. Repeat application after 10 minutes. Wipe excess material from substrate.

3. Observe 4 hours for repellency to penetrate and immediately thereafter begin application of silicate base coat.

E. Silicate Coating:

1. Base Coat:
Dilute silicate coating with maximum 20 percent dilution (25kg with 5 liters dilution). Stir well by hand or 600-800 RPM mixing equipment.

a. Apply base coat of diluted silicate coating.

b. Observe minimum 12 hours curing time.

2. Intermediate Coat: Do not dilute. Stir well by hand or 600-800 RPM mixing equipment.

a. Apply intermediate coat of undiluted silicate coating.

b. Observe minimum 12 hours curing time.

3. Top Coat:
Do not dilute. Stir well by hand or 600-800 RPM mixing equipment. a. Apply top coat of undiluted silicate coating.

3.4 CLEANING

A. Lime Remover: Clean tools with clean water.

B. Water Repellency: Clean tools immediately with benzene or similar solvent.

C. Silicate Coating: Clean tools, spills, and accidental drips immediately with plenty of water.

D. Leave applications clean and premises free from residue and debris from work of this Section.

END OF SECTION

PART 1 GENERAL

1.1 RELATED DOCUMENTS

A. Drawings and general provisions of the Contract, including General and Supplementary Conditions and Division 01 Specification Sections, apply to this Section.

1.2 SUMMARY

A. Section includes surface preparation and application of wood stains and transparent finishes**.**

1. Exterior Substrates:

   a. Exposed framing.

   b. Dressed lumber (finish carpentry or woodwork).

   c. Wood-based panel products.

2. Interior Substrates:

   a. Exposed glued-laminated beams and columns.

B. Related Requirements: None

1.3 DEFINITIONS

A. MPI Architectural Painting Specification Manual (MPI)

B. MPI Gloss Level 1: Not more than 5 units at 60 degrees and 10 units at 85 degrees, according to ASTM D 523.

C. MPI Gloss Level 4: 20 to 35 units at 60 degrees and not less than 35 units at 85 degrees, according to ASTM D 523.

D. MPI Gloss Level 5: 35 to 70 units at 60 degrees, according to ASTM D 523.

E. MPI Gloss Level 6: 70 to 85 units at 60 degrees, according to ASTM D 523.

F. MPI Gloss Level 7: More than 85 units at 60 degrees, according to ASTM D 523.

1.4 ACTION SUBMITTALS

A. Product Data:
For each type of product. Include preparation requirements and application instructions.

1. Include printout of current "MPI Approved Products List" for each product category specified, with the proposed product highlighted.

2. Indicate VOC content.

B. Sustainable Design Submittals:

1. Product Data: For paints and coatings, indicating VOC content.

2. Laboratory Test Reports:

3. For paints and coatings, indicating compliance with requirements for low-emitting materials.

C. Samples for Initial Selection:
For each type of product.

D. Samples for Verification:
For each type of finish system and in each color and gloss of finish required.

1. Submit Samples on representative samples of actual wood substrates, **8 inches (200 mm) square**.

2. Apply coats on Samples in steps to show each coat required for system.

3. Label each coat of each Sample.

4. Label each Sample for location and application area.

E. Product List:

F. Cross-reference to finish system and locations of application areas. Use same designations indicated on Drawings and in schedules. Include color designations.

1.5 MAINTENANCE MATERIAL SUBMITTALS

A. Furnish extra materials that match products installed and that are packaged with protective covering for storage and identified with labels describing contents.

1. Stains and Transparent Finishes: **5** percent, but not less than **1 gal. (3.8 L)** of each material and color applied.

1.6 QUALITY ASSURANCE

A. Mockups:
Apply mockups of each finish system indicated and each color selected to verify preliminary selections made under Sample submittals, to demonstrate aesthetic effects, and to set quality standards for materials and execution.

1. Owner's Representative will select one surface to represent surfaces and conditions for application of each type of finish system and substrate.

a. Vertical and Horizontal Surfaces: Provide samples of at least 100 sq. ft. (9 sq. m).

b. Other Items: Owner's Representative will designate items or areas required.

2. Final approval of stain color selections will be based on mockups.

   a. If preliminary stain color selections are not approved, apply additional mockups of additional stain colors selected by Owner's Representative at no added cost to Owner.

1.7 DELIVERY, STORAGE, AND HANDLING

A. Store materials not in use in tightly covered containers in well-ventilated areas.

   1. Maintain containers in clean condition, free of foreign materials and residue.

   2. Remove rags and waste from storage areas daily.

1.8 FIELD CONDITIONS

A. Apply finishes only when temperature of surfaces to be finished and ambient air temperatures are under 95 deg F (35 deg C).

B. Do not apply finishes when relative humidity exceeds 85 percent, at temperatures less than 5 deg F (3 deg C) above the dew point, or to damp or wet surfaces.

C. Do not apply exterior finishes in rain, fog, or mist.

PART 2 PRODUCTS

2.1 MANUFACTURERS

A. Basis-of-Design Product:
   Subject to compliance with requirements, provide a product by one of the following:

   1. Benjamin Moore & Co.

   2. Dunn-Edwards Corporation.

   3. Frazee Paint; Comex Group.

   4. Glidden Professional.

   5. PPG Architectural Finishes, Inc.

   6. Sherwin-Williams Company (The).

2.2 MATERIALS, GENERAL

A. MPI Standards:
   Products shall comply with MPI standards indicated and shall be listed in its "MPI Approved Products List."

B. Material Compatibility:

1. Materials for use within each paint system shall be compatible with one another and substrates indicated, under conditions of service and application as demonstrated by manufacturer, based on testing and field experience.

2. For each coat in a paint system, products shall be recommended in writing by manufacturers of topcoat for use in paint system and on substrate indicated.

C. Low-Emitting Materials:

D. Interior paints and coatings shall comply with the testing and product requirements of the California Department of Public Health's "Standard Method for the Testing and Evaluation of Volatile Organic Chemical Emissions from Indoor Sources Using Environmental Chambers."

E. Stain Colors:
As selected by Owner's Representative from manufacturer's full range

PART 3 EXECUTION

3.1 EXAMINATION

A. Examine substrates and conditions, with Applicator present, for compliance with requirements for maximum moisture content and other conditions affecting performance of the Work.

B. Maximum Moisture Content of Exterior Wood Substrates:
15 percent, when measured with an electronic moisture meter.

C. Maximum Moisture Content of Interior Wood Substrates:
13 percent, when measured with an electronic moisture meter.

D. Verify suitability of substrates, including surface conditions and compatibility with existing finishes and primers.

E. Proceed with finish application only after unsatisfactory conditions have been corrected.

1. Beginning finish application constitutes Contractor's acceptance of substrates and conditions.

3.2 PREPARATION

A. Comply with manufacturer's written instructions and recommendations in "MPI Architectural Painting Specification Manual" applicable to substrates indicated.

B. Remove hardware, covers, plates, and similar items already in place that are removable. If removal is impractical or impossible because of size or weight of item, provide surface-applied protection before surface preparation and finishing.

1. After completing finishing operations, use workers skilled in the trades involved to reinstall items that were removed. Remove surface-applied protection if any.

C. Clean and prepare surfaces to be finished according to manufacturer's written instructions for each substrate condition and as specified.

1. Remove dust, dirt, oil, and grease by washing with a detergent solution; rinse thoroughly with clean water and allow to dry. Remove grade stamps and pencil marks by sanding lightly. Remove loose wood fibers by brushing.

2. Remove mildew by scrubbing with a commercial wash formulated for mildew removal and as recommended by stain manufacturer.

D. Exterior Wood Substrates:

1. Scrape and clean knots and apply coat of knot sealer before applying primer.

2. Prime edges, ends, faces, undersides, and backsides of wood.

a. For solid hide stained wood, stain edges and ends after priming.

b. For varnish-coated stained wood, stain edges and ends and prime with varnish. Prime undersides and backsides with varnish.

3. Countersink stainless steel nails, if used, and fill with putty or plastic wood filler tinted to final color. Sand smooth when dried.

E. Interior Wood Substrates:

1. Scrape and clean knots, and apply coat of knot sealer before applying primer.

2. Apply wood filler paste to open-grain woods, as defined in "MPI Architectural Painting Specification Manual," to produce smooth, glasslike finish.

3. Sand surfaces exposed to view and dust off.

4. After priming, fill holes and imperfections in the finish surfaces with putty or plastic wood filler. Sand smooth when dry.

3.3 APPLICATION

A. Apply finishes according to manufacturer's written instructions and recommendations in "MPI Architectural Painting Specification Manual."

1. Use applicators and techniques suited for finish and substrate indicated.

2. Finish surfaces behind movable equipment and furniture same as similar exposed surfaces.

3. Do not apply finishes over labels of independent testing agencies or equipment name, identification, performance rating, or nomenclature plates.

B. Apply finishes to produce surface films without cloudiness, holidays, lap marks, brush marks, runs, ropiness, or other surface imperfections.

3.4 CLEANING AND PROTECTION

A. At end of each workday, remove rubbish, empty cans, rags, and other discarded materials from Project site.

B. After completing finish application, clean spattered surfaces. Remove spattered materials by washing, scraping, or other methods. Do not scratch or damage adjacent finished surfaces.

C. Protect work of other trades against damage from finish application. Correct damage by cleaning, repairing, replacing, and refinishing, as approved by Architect, and leave in an undamaged condition.

D. At completion of construction activities of other trades, touch up and restore damaged or defaced finished wood surfaces.

3.5 INTERIOR WOOD -FINISH-SYSTEM SCHEDULE

A. Wood Substrates: Glued-laminated construction.

1. Solid-Color Latex Stain System MPI INT 6.1T:

   a. Prime Coat: Stain, exterior, water based, solid hide, matching topcoat.

   b. Topcoat: Stain, exterior, water based, solid hide, MPI #16**.**

2. Semitransparent Stain System MPI INT 6.1G:

   a. Prime Coat: Stain, semitransparent, matching topcoat.

   b. Topcoat: Stain, semitransparent, for interior wood, MPI #90.

END OF SECTION

PART 1 ·GENERAL

1.1 RELATED DOCUMENTS

A. Drawings and general provisions of the Contract, including General and Supplementary Conditions and Division 1 Specification Sections, apply to this Section.

1.2 SUMMARY

A. This Section includes surface preparation and field painting of the following:

1. Exposed interior items and surfaces.

2. Surface preparation, priming, and finish coats specified in this Section are in addition to shop priming and surface treatment specified in other Sections.

B. Paint exposed surfaces, except where the paint schedules indicate that a surface or material is not to be painted or is to remain natural. If the paint schedules do not specifically mention an item or a surface, paint the item or surface the same as similar adjacent materials or surfaces whether or not schedules indicate colors. If the schedules do not indicate color or finish, the Owner's Representative will select from standard colors and finishes available.

1. Painting includes field painting of exposed bare and covered pipes and ducts (including color coding), hangers, exposed steel and iron work, and primed metal surfaces of mechanical and electrical equipment.

C. Do not paint prefinished items, concealed surfaces, finished metal surfaces, operating parts, and labels.

1. Prefinished items include the following factory-finished components:

a. Architectural woodwork and casework.

b. Elevator equipment.

c. Finished mechanical and electrical equipment.

d. Light fixtures.

e. Distribution cabinets.

2. Concealed surfaces include walls or ceilings in the following generally inaccessible spaces:

a. Ceiling plenums.

3. Finished metal surfaces include the following:

a. Anodized aluminum

b. Stainless steel

c. Chromium plate

d. Copper

e. Bronze and brass

4. Operating parts include moving parts of operating equipment and the following:

a. Valve and damper operators

b. Linkages

c. Sensing devices

d. Motor and fan shafts

5. Labels:
Do not paint over Underwriters Laboratories (UL), Factory Mutual (FM), or other code required labels or equipment name, identification, performance rating, or nomenclature plates.

D. Related Sections include the following:

1. Division 5 Section "Structural Steel" for shop priming structural steel

2. Division 5 Section "Metal Fabrications" for shop priming ferrous metal

3. Division 6 Section "Interior Architectural Woodwork" for shop priming interior architectural woodwork

4. Division 8 Section "Steel Frames" for shop priming steel doors and frames

5. Division 9 Section "Gypsum Board Assemblies" for surface preparation for gypsum board

1.3 DEFINITIONS

A. General:
Standard coating terms defined in ASTM D 16 apply to this Section.

1. Flat refers to a lusterless or matte finish with a gloss range below 15 when measured at an 85- degree meter.

2. Eggshell refers to low-sheen finish with a gloss range between 5 and 20 when measured at a 60-degree meter.

3. Satin refers to low-sheen finish with a gloss range between 15 and 35 when measured at a 60- degree meter.

4. Semi-gloss refers to medium-sheen finish with a gloss range between 30 and 65 when measured at a 60-degree meter.

5. Full gloss refers to high-sheen finish with a gloss range more than 65 when measured at a 60- degree meter.

1.4 SUBMITTALS

A. Product Data:
For each paint system specified. Include block fillers and primers.

1. Material List:
Provide an inclusive list of required coating materials. Indicate each material and cross-reference specific coating, finish system, and application. Identify each material by manufacturer's catalog number and general classification.

2. Manufacturer's Information:
Provide manufacturer's technical information, including label analysis and instructions for handling, storing, and applying each coating material proposed for use.

3. Certification by the manufacturer that products supplied comply with local regulations controlling use of volatile organic compounds (VOCs).

B. Samples for Verification:
Of each color and material to be applied, with texture to simulate actual conditions.

C. Qualification Data:
For firms and persons specified in the "Quality Assurance" Article to demonstrate their capabilities and experience. Include lists of completed projects with project names and addresses, names and addresses of Owner's Representative and owners, and other information specified.

1.5 QUALITY ASSURANCE

A. Applicator Qualifications:
Engage an experienced applicator who has completed painting system applications similar in material and extent to that indicated for this Project with a record of successful in- service performance.

B. Source Limitations:
Obtain block fillers, primers, and undercoat materials for each coating system from the same manufacturer as the finish coats.

1.6 DELIVERY, STORAGE, AND HANDLING

A. Deliver materials to the Project Site in manufacturer's original, unopened packages and containers bearing manufacturer's name and label, and the following information:

1. Product name or title of material

2. Product description (generic classification or binder type)

3. Manufacturer's stock number and date of manufacture

4. Contents by volume, for pigment and vehicle constituents

5. Thinning instructions

6. Application instructions

7. Color name and number

8. VOC content

B. Store materials not in use in tightly covered containers in a well-ventilated area. Maintain containers used in storage in a clean condition, free of foreign materials and residue.

1. Keep storage area neat and orderly. Remove oily rags and waste daily. Take necessary measures to ensure that workers and work areas are protected from fire and health hazards resulting from handling, mixing, and application.

1.7 PROJECT CONDITIONS

A. Apply water-based paints only when the temperature of surfaces to be painted and surrounding air temperatures are below 90°F (32°C).

B. Apply solvent-thinned paints only when the temperature of surfaces to be painted and surrounding air temperatures are below 95°F (35°C).

C. Do not apply paint when the relative humidity exceeds 85 percent; or at temperatures less than 5°F (3°C) above the dew point; or to damp or wet surfaces.

1. Painting may continue during inclement weather if surfaces and areas to be painted are enclosed and within temperature limits specified by manufacturer during application and drying periods.

1.8 EXTRA MATERIALS

A. Furnish extra paint materials from the same production run as the materials applied in the quantities described below. Package paint materials in unopened, factory-sealed containers for storage and identify with labels describing contents. Deliver extra materials to the Owner.

1. Quantity:
Furnish the Owner with a 1-gallon can of each type of finish coat of each color, taken from lots furnished for the work.

PART 2 - PRODUCTS

2.1 MANUFACTURERS

A. Available Products:
Subject to compliance with requirements, products that may be incorporated into the Work include, but are not limited to, products listed in the paint schedules.

2.2 MANUFACTURERS NAMES:

The following manufacturers are referred to in the paint schedules by use of shortened versions of their names, which are shown in parentheses:

1. Devoe & Raynolds Co. (Devoe).

2. Fuller-O'Brien Paints (Fuller).

3. Glidden Co. (The) (Glidden).

4. Benjamin Moore & Co. (Moore).

5. PPG Industries, Inc. (PPG).

6. Pratt & Lambert, Inc. (P & L).

7. Sherwin-Williams Co. (S-W).

8. Martin Seymour Co. (MS).

2.3 PAINT MATERIALS, GENERAL

A. Material Compatibility:
Provide block fillers, primers, undercoats, and finish-coat materials that are compatible with one another and the substrates indicated under conditions of service and application, as demonstrated by manufacturer based on testing and field experience.

B. Material Quality:
Provide manufacturer's best-quality paint material of the various coating types specified. Paint-material containers not displaying manufacturer's product identification will not be acceptable.

1. Proprietary Names:
Use of manufacturer's proprietary product names to designate colors or materials is not intended to imply that products named are required to be used to the exclusion of equivalent products of other manufacturers. Furnish manufacturer's material data and certificates of performance for proposed substitutions.

C. Colors:
Match colors indicated by reference to manufacturer's color designations.

PART 3 - EXECUTION

3.1 EXAMINATION

A. Examine substrates, areas, and conditions, with the Applicator present, under which painting will be performed for compliance with paint application requirements.

1. Do not begin to apply paint until unsatisfactory conditions have been corrected and surfaces receiving paint are thoroughly dry.

2. Start of painting will be construed as the Applicator's acceptance of surfaces and conditions within an area.

B. Coordination of Work:

Review other Sections in which primers are provided to ensure compatibility of the total system for various substrates. On request, furnish information on characteristics of finish materials to ensure use of compatible primers.

1. Notify the Owner's Representative about anticipated problems using the materials specified over substrates primed by others.

3.2 PREPARATION

A. General:
Remove hardware and hardware accessories, plates, machined surfaces, lighting fixtures, and similar items already installed that are not to be painted. If removal is impractical or impossible because of the size or weight of the item, provide surface-applied protection before surface preparation and painting.

1. After completing painting operations in each space or area, reinstall items removed using workers skilled in the trades involved.

B. Cleaning:
Before applying paint or other surface treatments, clean the substrates of substances that could impair the bond of the various coatings. Remove oil and grease before cleaning.

1. Schedule cleaning and painting so dust and other contaminants from the cleaning process will not fall on wet, newly painted surfaces.

C. Surface Preparation:
Clean and prepare surfaces to be painted according to manufacturer's written instructions for each substrate condition and as specified.

1. Provide barrier coats over incompatible primers or remove and re-prime.

2. Ferrous Metals:
Clean un-galvanized ferrous metal surfaces that have not been shop coated; remove oil, grease, dirt, loose mill scale, and other foreign substances. Use solvent or mechanical cleaning methods that comply with the Steel Structures Painting Council's (SSPC) recommendations.

a. Blast steel surfaces clean as recommended by paint system manufacturer and according to requirements of SSPC-SP 10.

b. Treat bare and sandblasted or pickled clean metal with a metal treatment wash coat before priming.

c. Touch up bare areas and shop-applied prime coats that have been damaged. Wire-brush, clean with solvents recommended by paint manufacturer, and touch up with the same primer as the shop coat.

3. Galvanized Surfaces:
Clean galvanized surfaces with nonpetroleum-based solvents so surface is free of oil and surface contaminants. Remove pretreatment from galvanized sheet metal fabricated from coil stock by mechanical methods.

D. Materials Preparation:
Mix and prepare paint materials according to manufacturer's written instructions.

1. Maintain containers used in mixing and applying paint in a clean condition, free of foreign materials and residue.

2. Stir material before application to produce a mixture of uniform density. Stir as required during application. Do not stir surface film into material. If necessary, remove surface film and strain material before using.

3. Use only thinners approved by paint manufacturer and only within recommended limits.

E. Tinting:
Tint each undercoat a lighter shade to simplify identification of each coat when multiple coats of the same material are applied. Tint undercoats to match the color of the finish coat but provide sufficient differences in shade of undercoats to distinguish each separate coat.

3.3 APPLICATION

A. General:
Apply paint according to manufacturer's written instructions. Use applicators and techniques best suited for substrate and type of material being applied.

1. Paint colors, surface treatments, and finishes are indicated in the schedules.

2. Do not paint over dirt, rust, scale, grease, moisture, scuffed surfaces, or conditions detrimental to formation of a durable paint film.

3. Provide finish coats that are compatible with primers used.

4. The term "exposed surfaces" includes areas visible when permanent or built-in fixtures, convector covers, covers for finned-tube radiation, grilles, and similar components are in place. Extend coatings in these areas, as required, to maintain the system integrity and provide desired protection.

5. Paint surfaces behind movable equipment and furniture the same as similar exposed surfaces. Before the final installation of equipment, paint surfaces behind permanently fixed equipment or furniture with prime coat only.

6. Paint back sides of access panels and removable or hinged covers to match exposed surfaces.

7. Finish exterior doors on tops, bottoms, and side edges the same as exterior faces.

8. Sand lightly between each succeeding enamel or varnish coat.

B. Scheduling Painting:
Apply first coat to surfaces that have been cleaned, pretreated, or otherwise prepared for painting as soon as practicable after preparation and before subsequent surface deterioration.

1. The number of coats and the film thickness required are the same regardless of application method. Do not apply succeeding coats until the previous coat has cured as recommended by the manufacturer. If sanding is required to produce a smooth, even surface according to manufacturer's written instructions, sand between applications.

2. Omit primer on metal surfaces that have been shop primed and touch up painted.

3. If undercoats, stains, or other conditions show through final coat of paint, apply additional coats until paint film is of uniform finish, color, and appearance. Give special attention to ensure edges, corners, crevices, welds, and exposed fasteners receive a dry film thickness equivalent to that of flat surfaces.

4. Allow enough time between successive coats to permit proper drying. Do not recoat surfaces until paint has dried to where it feels firm, does not deform or feel sticky under moderate thumb pressure, and where application of another coat of paint does not cause the undercoat to lift or lose adhesion.

C. Application Procedures:
Apply paints and coatings by brush, roller, spray, or other applicators according to manufacturer's written instructions.

1. Brushes:
Use brushes best suited for the type of material applied. Use brush of appropriate size for the surface or item being painted.

2. Rollers:
Use rollers of carpet, velvet back, or high-pile sheep's wool as recommended by the manufacturer for the material and texture required.

3. Spray Equipment:
Use airless spray equipment with orifice size as recommended by the manufacturer for the material and texture required.

D. Minimum Coating Thickness:
Apply paint materials no thinner than manufacturers recommended spreading rate. Provide the total dry film thickness of the entire system as recommended by the manufacturer.

E. Mechanical and Electrical Work:
Painting of mechanical and electrical work is limited to items exposed in equipment rooms and in occupied spaces.

F. Electrical items to be painted include, but are not limited to, the following:

1. Conduit and fittings

G. Prime Coats:

Before applying finish coats, apply a prime coat of material, as recommended by the manufacturer, to material that is required to be painted or finished and that has not been prime coated by others. Recoat primed and sealed surfaces where evidence of suction spots or unsealed areas in first coat appears, to ensure a finish coat with no burn through or other defects due to insufficient sealing.

H. Pigmented (Opaque) Finishes:
Completely cover surfaces as necessary to provide a smooth, opaque surface of uniform finish, color, appearance, and coverage. Cloudiness, spotting, holidays, laps, brush marks, runs, sags, ropiness, or other surface imperfections will not be acceptable.

I. Transparent (Clear) Finishes:
Use multiple coats to produce a glass-smooth surface film of even luster. Provide a finish free of laps, runs, cloudiness, color irregularity, brush marks, orange peel, nail holes, or other surface imperfections.

1. Provide satin finish for final coats.

J. Completed Work:
Match approved samples for color, texture, and coverage. Remove, refinish, or repaint work not complying with requirements.

3.4 CLEANING

A. Cleanup:
At the end of each workday, remove empty cans, rags, rubbish, and other discarded paint materials from the site.

1. After completing painting, clean glass and paint-spattered surfaces. Remove spattered paint by washing and scraping. Be careful not to scratch or damage adjacent finished surfaces.

3.5 PROTECTION

A. Protect work of other trades, whether being painted or not, against damage by painting. Correct damage by cleaning, repairing or replacing, and repainting, as approved by Owner's Representative.

B. Provide "Wet Paint" signs to protect newly painted finishes. Remove temporary protective wrappings provided by others to protect their work after completing painting operations.

1. At completion of construction activities of other trades, touch up and restore damaged or defaced painted surfaces. Comply with procedures specified in PDCA Pl.

3.6 EXTERIOR PAINT SCHEDULE

A. Ferrous Metal:
Provide the following finish systems over exterior ferrous metal. Primer is not required on shop-primed items.

1. Semi-gloss, Acrylic-Enamel Finish: 2 finish coats over a rust-inhibitive primer.

a. Primer:

Rust-inhibitive metal primer applied at spreading rate recommended by the manufacturer to achieve a total dry film thickness of not less than 1.3 mils (0.033 mm).

b. First and Second Coats:
Semi-gloss, exterior, acrylic-latex enamel applied at spreading rate recommended by the manufacturer to achieve a total dry film thickness of not less than 2.6 mils (0.066 mm).

3.7 INTERIOR PAINT SCHEDULE

A. Gypsum Board:
Provide the following finish systems over interior gypsum board surfaces:

1. Flat Acrylic Finish: 2 finish coats over a primer

2. Primer:
Latex-based, mildew inhibiting interior primer, such as Kilz2 or approved equal, applied at spreading rate recommended by the manufacturer to achieve a total dry film thickness of not less than 1.2 mils (0.031 mm).

3. Use only thinners approved by paint manufacturer and only within the recommended limits.

B. First and Second Coats:
Flat, acrylic-latex-based, interior paint applied at spreading rate recommended by the manufacturer to achieve a total dry film thickness of not less than 2.5 mils (0.064 mm).

C. Ferrous Metal:
Provide the following finish systems over ferrous metal:

1. Semi-gloss, Acrylic-Enamel Finish: One finish coat over an enamel undercoat and a primer

a. Primer:
Quick-drying, rust-inhibitive, alkyd-based or epoxy-metal primer, as recommended by the manufacturer for this substrate, applied at spreading rate recommended by the manufacturer to achieve a total dry film thickness of not less than 1.5 mils (0.038 mm).

b. Undercoat:
Alkyd, interior enamel undercoat or semi-gloss, acrylic-latex, interior enamel, as recommended by the manufacturer for this substrate, applied at spreading rate recommended by the manufacturer to achieve a total dry film thickness of not less than 1.3 mils (0.033 mm).

c. Finish Coat:
Semi-gloss, acrylic-latex, interior enamel applied at spreading rate recommended by the manufacturer to achieve a total dry film thickness of not less than 1.3 mils (0.033 mm).

D. Tinting:
Tint each undercoat a lighter shade to simplify identification of each coat when multiple coats of the same material are being applied. Tint undercoats to match the color of the finish coat but provide sufficient difference in shade of undercoats to distinguish each separate coat.

END OF SECTION

PART 1 - GENERAL

1.1 SUMMARY

A. Section Includes:

1. Sleeves.
2. Sleeve-seal systems.
3. Grout.

1.2 ACTION SUBMITTALS

A. Product Data:
For each type of product indicated.

PART 2 - PRODUCTS

2.1 SLEEVES

A. Galvanized-Steel Wall Pipes:
ASTM A 53/A 53M, Schedule 40, with plain ends and welded steel collar; zinc coated.

B. Galvanized Steel Pipe Sleeves:
ASTM A 53/A 53M, Type E, Grade B, Schedule 40, zinc coated, with plain ends.

C. PVC Pipe Sleeves:
ASTM D 1785, Schedule 40.

D. Galvanized Steel Sheet Sleeves:
0.0239-inch (0.6-mm) minimum thickness; round tube closed with welded longitudinal joint.

2.2 SLEEVE-SEAL SYSTEMS

A. Manufacturers:
Subject to compliance with requirements, provide products by one of the following available manufacturers offering products that may be incorporated into the Work include, but are not limited to, the following:

1. Advance Products & Systems, Inc.
2. CALPICO, Inc.
3. Metraflex Company (The)
4. Pipeline Seal and Insulator, Inc.
5. Proco Products, Inc.

B. Description:

Modular sealing-element unit, designed for field assembly, for filling annular space between piping and sleeve.

1. Sealing Elements:
EPDM-rubber or NBR interlocking links shaped to fit surface of pipe. Include type and number required for pipe material and size of pipe.

2. Pressure Plates: Plastic.

3. Connecting Bolts and Nuts:
Carbon steel, with corrosion-resistant coating, of length required to secure pressure plates to sealing elements.

2.3 GROUT

A. Standard:
ASTM C 1107/C 1107M, Grade B, post hardening and volume adjusting, dry, hydraulic cement grout.

B. Characteristics: Nonshrink; recommended for interior and exterior applications.

C. Design Mix: 5000-psi (34.5-MPa), 28-day compressive strength.

D. Packaging: Premixed and factory packaged.

PART 3 - EXECUTION

3.1 SLEEVE INSTALLATION

A. Install sleeves for piping passing through penetrations in floors, partitions, roofs, and walls.

B. For sleeves that will have sleeve-seal system installed, select sleeves of size large enough to provide l inch (25-mm) annular clear space between piping and concrete slabs and walls.

1. Sleeves are not required for core-drilled holes.

C. Install sleeves for pipes passing through interior partitions.

1. Cut sleeves to length for mounting flush with both surfaces.

2. Install sleeves that are large enough to provide 1/4-inch (6.4-mm) annular clear space between sleeve and pipe or pipe insulation.

3. Seal annular space between sleeve and piping or piping insulation; use joint sealants appropriate for size, depth, and location of joint. Comply with requirements for sealants specified in Section 07 92 00 "Joint Sealants."

D. Fire Barrier Penetrations:
Maintain indicated fire rating of walls, partitions, ceilings, and floors at pipe penetrations. Seal pipe penetrations with fire stop materials. Comply with requirements for fire stopping specified in Div. 07.

3.2 SLEEVE-SEAL-SYSTEM INSTALLATION

A. Install sleeve seal systems in sleeves in exterior concrete walls and slabs on grade at service piping entries into building.

B. Select type, size, and number of sealing elements required for piping material and size and for sleeve ID or hole size. Position piping in center of sleeve. Center piping in penetration, assemble sleeve seal system components, and install in annular space between piping and sleeve. Tighten bolts against pressure plates that cause sealing elements to expand and make a watertight seal.

3.3 SLEEVE AND SLEEVE-SEAL SCHEDULE

A. Use sleeves and sleeve seals for the following piping-penetration applications:

1. Exterior Concrete Walls above Grade:

   a. Piping Smaller Than NPS 6 (DN 150): Galvanized steel wall sleeves

   b. Piping NPS 6 (DN 150) and Larger: Galvanized steel wall sleeves

2. Concrete Slabs-on-Grade:

   a. Piping Smaller Than NPS 6 (DN 150): Galvanized-steel-pipe sleeves with sleeve seal system.

      i. Select sleeve size to allow for l inch (25-mm) annular clear space between piping and sleeve for installing sleeve seal system.

   b. Piping NPS 6 (DN 150) and Larger: Galvanized steel pipe sleeves with sleeve seal system.

      i. Select sleeve size to allow for l inch (25-mm) annular clear space between piping and sleeve for installing sleeve seal system.

3. Concrete Slabs above Grade:

   a. Piping Smaller Than NPS 6 (DN 150): Galvanized steel pipe sleeves.

   b. Piping NPS 6 (DN 150) and Larger: Galvanized steel pipe sleeves.

4. Interior Partitions:

   a. Piping Smaller Than NPS 6 (DN 150): Galvanized-steel-pipe sleeves.

   b. Piping NPS 6 (DN 150) and Larger: Galvanized-steel-sheet sleeves.

END OF SECTION

PART 1 - GENERAL

1.1 SUMMARY

A. Section Includes:

1. Brass ball valves
2. Bronze ball valves
3. Bronze swing check valves
4. Bronze gate valves
5. Iron gate valves
6. Bronze globe valves.

B. Related Sections:

1. Section 22 05 53 "Identification for Plumbing Piping and Equipment" for valve tags and schedules
2. Section 22 11 16 "Potable Water Piping" for valves applicable only to this piping
3. Section 22 13 19 "Sanitary Waste Piping Specialties" for valves applicable only to this piping

1.2 ACTION SUBMITTALS

A. Product Data: For each type of valve indicated

1.3 QUALITY ASSURANCE

A. ASME Compliance:
ASME B16.10 and ASME B16.34 for ferrous valve dimensions and design criteria.

B. NSF Compliance: NSF 61 for valve materials for potable water service.

PART 2 - PRODUCTS

2.1 GENERAL REQUIREMENTS FOR VALVES

A. Refer to valve schedule articles for applications of valves.

B. Valve Pressure and Temperature Ratings:
Not less than indicated and as required for system pressures and temperatures

C. Valve Sizes:Same as upstream piping unless otherwise indicated

D. Valves in Insulated Piping: With 2-inch (50-mm) stem extensions and the following features:

1. Gate Valves: With rising stem

2. Ball Valves:
With extended operating handle of non-thermal-conductive material, and protective sleeve that allows operation of valve without breaking the vapor seal or disturbing insulation

3. Butterfly Valves: With extended neck

E. Valve-End Connections:

1. Flanged: With flanges according to ASME B16.1 for iron valves

2. Solder Joint: With sockets according to ASME B 16.18

3. Threaded: With threads according to ASME B1.20.1

2.2 BRASS BALL VALVES

A. Two-Piece, Full-Port, Brass Ball Valves with Brass Trim:

1. Manufacturers:
Subject to compliance with requirements, provide products by one of the following:

a. Crane Co.; Crane Valve Group; Crane Valves

b. Crane Co.; Crane Valve Group; Jenkins Valves

c. Hammond Valve

d. Milwaukee Valve Company

e. NIBCO INC.

2. Description:

a. Standard: MSS SP-110

b. SWP Rating: 150 psig (1035 kPa)

c. CWP Rating: 600 psig (4140 kPa)

d. Body Design: Two piece

e. Body Material: Forged brass

f. Ends: Threaded

g. Seats: PTFE or TFE

h. Stem: Brass

i. Ball: Chrome-plated brass

j. Port: Full

2.3 BRONZE BALL VALVES

A. Two Piece, Full Port, Bronze Ball Valves with Bronze Trim:

1. Manufacturers:
Subject to compliance with requirements, provide products by one of the following available manufacturers offering products that may be incorporated into the Work include, but are not limited to, the following:

a. Crane Co.; Crane Valve Group; Crane Valves

b. Hammond Valve

c. NIBCO INC.

d. Watts Regulator Co.; a division of Watts Water Technologies, Inc.

2. Description:

a. Standard: MSS SP-110

b. SWP Rating: 150 psig (1035 kPa)

c. CWP Rating: 600 psig (4140 kPa)

d. Body Design: Two pieces

e. Body Material: Bronze

f. Ends: Threaded

g. Seats: PTFE or TFE

h. Stem: Bronze

i. Ball: Chrome-plated brass

j. Port: Full

2.4 BRONZE GATE VALVES

A. Class 125, RS Bronze Gate Valves:

1. Manufacturers:
Subject to compliance with requirements, provide products by one of the following:

a. Crane Co.; Crane Valve Group; Jenkins Valves

b. Hammond Valve

c. NIBCO INC.

2. Description:

a. Standard: MSS SP-80, Type 2

b. CWP Rating: 200 psig (1380 kPa)

c. Body Material: ASTM B 62, bronze with integral seat and screw-in bonnet

d. Ends: Threaded or solder joint

e. Stem: Bronze

f. Disc: Solid wedge; bronze

g. Packing: Asbestos free

h. Hand wheel: Malleable iron, bronze, or aluminum.

PART 3 - EXECUTION

3.1 VALVE INSTALLATION

A. Install valves with unions or flanges at each piece of equipment arranged to allow service, maintenance, and equipment removal without system shutdown.

B. Locate valves for easy access and provide separate support where necessary.

C. Install valves in horizontal piping with stem at or above center of pipe.

D. Install valves in position to allow full stem movement.

3.2 ADJUSTING

A. Adjust or replace valve packing after piping systems have been tested and put into service but before final adjusting and balancing. Replace valves if persistent leaking occurs.

3.3 GENERAL REQUIREMENTS FOR VALVE APPLICATIONS

A. If valve applications are not indicated, use the following:

1. Shutoff Service: Ball, butterfly, or gate valves

2. Throttling Service: Ball, or butterfly valves

3. Pump Discharge Check Valves:

a. NPS 2 (DN 50) and Smaller: Bronze swing check valves with bronze disc

b. NPS 2-1/2 (DN 65) and Larger for Potable Water: Iron swing check valves with lever and weight or with spring

B. If valves with specified SWP classes or CWP ratings are not available, the same types of valves with higher SWP class or CWP ratings may be substituted.

C. Select valves, except wafer types, with the following end connections:

1. For Copper Tubing, NPS 2 (DN 50) and Smaller:
Threaded ends except where solder-joint valve end option is indicated in valve schedules below

2. For Copper Tubing, NPS 2-1/2 to NPS 4 (DN 65 to DN 100):
Flanged ends except where threaded valve-end option is indicated in valve schedules below

3. For Copper Tubing, NPS 5 (DN 125) and Larger:
Flanged ends

3.4 POTABLE, HOT AND COLD-WATER VALVE SCHEDULE

A. Pipe NPS 2 (DN 50) and Smaller:

1. Bronze and Brass Valves: May be provided with solder-joint ends instead of threaded ends

2. Bronze Angle Valves: Class 125, bronze disc

3. Ball Valves: One-piece, full, brass trim

4. Bronze Swing Check Valves: Bronze disc

5. Bronze Gate Valves: Class 125, NRS

6. Bronze Globe Valves: Class 125, bronze disc

END OF SECTION

PART 1 - GENERAL

1.1 SUMMARY

A. Section Includes:

1. Equipment labels

2. Warning signs and labels

3. Pipe labels

1.2 ACTION SUBMITTAL

Product Data: For each type of product indicated.

PART 2 - PRODUCTS

2.1 EQUIPMENT LABELS

A. Plastic Labels for Equipment:

1. Material and Thickness:
Multilayer, multicolor, plastic labels for mechanical engraving, 1/l6 inch (1.6 mm) thick, and having predrilled holes for attachment hardware.

2. Letter Color: White

3. Background Color: Black

4. Maximum Temperature: Able to withstand temperatures up to 160°F (71°C)

5. Minimum Label Size:
Length and width vary for required label content, but not less than 2-1/2 by 3/4 inch (64 by 19 mm).

6. Minimum Letter Size:
1/4 inch (6.4 mm) for name of units if viewing distance is less than 24 inches (600 mm), 1/2 inch (13 mm) for viewing distances up to 72 inches (1830 mm), and proportionately larger lettering for greater viewing distances. Include secondary lettering two thirds to three fourths the size of principal lettering.

7. Adhesive: Contact type permanent adhesive, compatible with label and with substrate

B. Label Content:
Include equipment's Drawing designation or unique equipment number, Drawing numbers where equipment is indicated (plans, details, and schedules), plus the Specification Section number and title where equipment is specified.

C. Equipment Label Schedule:
For each item of equipment to be labeled, on 8-1/2-by-11-inch (A4) bond paper. Tabulate equipment identification number and identify Drawing numbers where equipment is indicated (plans, details, and schedules), plus the Specification Section number and title where equipment is specified. Equipment schedule shall be included in operation and maintenance data.

2.2 WARNING SIGNS AND LABELS

A. Material and Thickness:
Multilayer, multicolor, plastic labels for mechanical engraving, 1/8 inch (3.2 mm) thick, and having predrilled holes for attachment hardware.

1. Letter Color: White

2. Background Color: Black or Red

3. Maximum Temperature: Able to withstand temperatures up to 160°F (71°C)

4. Minimum Label Size: Length and width vary for required label content, but not less than 2 l/2 by 3/4 inch (64 by 19 mm).

5. Minimum Letter Size:
1/4 inch (6.4 mm) for name of units if viewing distance is less than 24 inches (600 mm), 1/2 inch (13 mm) for viewing distances up to 72 inches (1830 mm), and proportionately larger lettering for greater viewing distances. Include secondary lettering two thirds to three fourths the size of principal lettering.

6. Fasteners: Stainless steel self-tapping screws

7. Adhesive: Contact type permanent adhesive, compatible with label and with substrate

8. Label Content: Include caution and warning information, plus emergency notification instructions.

2.3 PIPE LABELS

A. General Requirements for Manufactured Pipe Labels:

B. Preprinted, color-coded, with lettering indicating service, and showing flow direction

C. Pretension Pipe Labels:

D. Pre-coiled, semi-rigid plastic formed to cover full circumference of pipe and to attach to pipe without fasteners or adhesive

E. Self-Adhesive Pipe Labels:

F. Printed plastic with contact-type, permanent adhesive backing

G. Pipe Label Contents:

H. Include identification of piping service using same designations or abbreviations as used on Drawings, pipe size, and an arrow indicating flow direction.

I. Flow Direction Arrows:

J. Integral with piping system service lettering to accommodate both directions, or as separate unit on each pipe label to indicate flow direction.

K. Lettering Size: At least 1 1/2 inches (38 mm) high

PART 3 - EXECUTION

3.1 PREPARATION

Clean piping and equipment surfaces of substances that could impair bond of identification devices, including dirt, oil, grease, release agents, and incompatible primers, paints, and encapsulants.

3.2 EQUIPMENT LABEL INSTALLATION

Install or permanently fasten labels on each major item of mechanical equipment. Locate equipment labels where accessible and visible.

3.3 PIPE LABEL INSTALLATION

A. Piping Color Coding: Painting of piping is specified in Division 09

B. Locate pipe labels where piping is exposed or above accessible ceilings in finished spaces; machine rooms; accessible maintenance spaces such as shafts, tunnels, and plenums; and exterior exposed locations as follows:

1. Near each valve and control device.

2. Near each branch connection, excluding short takeoffs for fixtures and terminal units. Where flow pattern is not obvious, mark each pipe at branch.

3. Near penetrations through walls, floors, ceilings, and inaccessible enclosures.

4. At access doors, manholes, and similar access points that permit view of concealed piping.

5. Near major equipment items and other points of origination and termination.

6. Spaced at maximum intervals of 50 feet (15m) along each run. Reduce intervals to 25 feet (7.6 m) in areas of congested piping and equipment.

7. On piping above removable acoustical ceilings. Omit intermediately spaced labels.

C. Pipe Label Color Schedule:

1. Potable Water Piping:

a. Background Color: Blue.

b. Letter Color: White.

2. Sanitary Waste and Storm Drainage Piping:

a. Background Color: Black

b. Letter Color: White

END OF SECTION

PART 1 - GENERAL

1.1 SUMMARY

A. Section Includes:

1. Vacuum breakers.
2. Balancing valves.
3. Temperature-actuated, water mixing valves.
4. Strainers.
5. Hose bibs.
6. Drain valves.
7. Water-hammer arresters.

1.2 ACTION SUBMITTALS

A. Product Data: For each type of product.

1.3 INFORMATIONAL SUBMITTALS

A. Field quality-control reports.

1.4 CLOSEOUT SUBMITTALS

A. Operation and maintenance data.

PART 2 - PRODUCTS

2.1 GENERAL REQUIREMENTS FOR PIPING SPECIALTIES

A. Potable-water piping and components shall comply with NSF 61 and NSF 14.

2.2 PERFORMANCE REQUIREMENTS

A. Minimum Working Pressure for Potable Water Piping Specialties: 125 psig (860 kPa) unless otherwise indicated.

2.3 VACUUM BREAKERS

A. Pipe Applied, Atmospheric-Type Vacuum Breakers:

1. Standard: ASSE 1001.
2. Size: NPS l/4 to NPS 3 (ON 8 to ON 80), as required to match connected piping.

3. Body: Bronze.

4. Inlet and Outlet Connections: Threaded.

5. Finish: Rough bronze.

B. Hose Connection Vacuum Breakers:

1. Standard: ASSE 1011.

2. Body: Bronze, nonremovable, with manual drain.

3. Outlet Connection: Garden hose threaded complying with ASME Bl.20.7.

4. Finish: Chrome or nickel plated.

2.4 BALANCING VALVES

A. Memory Stop Balancing Valves:

1. Manufacturers:
Subject to compliance with requirements, provide products by one of the following

2. Available manufacturers offering products that may be incorporated into the Work include, but are not limited to, the following:

a. Crane Co.; Crane Valve Group; Crane Valves.

b. Milwaukee Valve Company.

c. NIBCO Inc.

3. Standard: MSS SP-1 10 for two-piece, copper-alloy ball valves

4. Pressure Rating: 400-psig (2760-kPa) minimum CWP

5. Size: NPS 2 (ON 50) or smaller

6. Body: Copper alloy

7. Port: Standard or full port

8. Ball: Chrome plated brass

9. Seats and Seals: Replaceable

10. End Connections: Solder joint or threaded

11. Handle: Vinyl covered steel with memory setting device

2.5 TEMPERATURE ACTUATED, WATER MIXING VALVES

A. Primary, Thermostatic, Water Mixing Valves:

1. Basis of -Design Product:
Subject to compliance with requirements, provide product indicated on Drawings or comparable product by one of the following:

a. Leonard Valve Company

b. Powers; a division of Watts Water Technologies, Inc.

c. Symmons Industries, Inc.

2. Standard: ASSE 1017

3. Pressure Rating: 125 psig (860 kPa) minimum unless otherwise indicated

2.6 DRAIN VALVES

A. Ball-Valve-Type, Hose-End Drain Valves:

1. Standard: MSS SP-110 for standard-port, two-piece ball valves

2. Pressure Rating: 400-psig (2760-kPa) minimum CWP

3. Size: NPS 3/4 (DN 20)

4. Body: Copper alloy

5. Ball: Chrome-plated brass

6. Seats and Seals: Replaceable

7. Handle: Vinyl-covered steel

8. Inlet: Threaded or solder joint

9. Outlet:
Threaded, short nipple with garden-hose thread complying with ASME Bl.20.7 and cap with brass chain

2.7 WATER HAMMER ARRESTERS

A. Water Hammer Arresters:

1. Basis-of-Design Product:
Subject to compliance with requirements, provide product indicated on Drawings or comparable product by one of the following:

a. Precision Plumbing Products, Inc.

b. Sioux Chief Manufacturing Company, Inc.

c. Smith, Jay R. Mfg. Co.; Division of Smith Industries, Inc.

2. Standard: ASSE 1010 or PDI-WH 201

3. Type: Copper tube with piston

4. Size: ASSE 10I0, Sizes AA and A through F, or PDI-WH 201, Sizes A through F

PART 3 - EXECUTION

3.1 INSTALLATION

B. Install balancing valves in locations where they can easily be adjusted.

C. Install temperature actuated, water mixing valves with check stops or shutoff valves on inlets and with shutoff valve on outlet.

1. Install cabinet-type units recessed in or surface mounted on wall as specified.

D. Install Y-pattern strainers for water on supply side of each solenoid valve and pump.

E. Install water-hammer arresters in water piping according to POI-WH 201.

3.2 CONNECTIONS

A. Comply with requirements for ground equipment in Section 26 05 26 "Grounding and Bonding for Electrical Systems."

B. Fire-retardant-treated-wood blocking is specified in Section 26 05 19 "Low Voltage Electrical Power Conductors and Cables" for electrical connections.

3.3 FIELD QUALITY CONTROL

A. Potable water piping specialties will be considered defective if they do not pass tests and inspections.

B. Prepare test and inspection reports.

3.4 ADJUSTING

A. Set field-adjustable pressure set points of water pressure reducing valves.

B. Set field-adjustable flow set points of balancing valves.

C. Set field-adjustable temperature set points of temperature-actuated, water mixing valves.

END OF SECTION

PART 1 - GENERAL

1.1 SUMMARY

A. Section Includes:

1. Pipe, tube, and fittings

2. Specialty pipe fittings

1.2 ACTION SUBMITTALS

A. Product Data:
For each type of product indicated.

1.3 INFORMATIONAL SUBMITTALS

A. Field quality-control reports.

1.4 QUALITY ASSURANCE

A. Piping materials shall bear label, stamp, or other markings of specified testing agency.

B. Comply with NSF/ANSI 14, "Plastics Piping Systems Components and Related Materials," for plastic piping components. Include marking with "NSF-dwv" for plastic drain, waste, and vent piping and "NSF-sewer" for plastic sewer piping.

PART 2 - PRODUCTS

2.1 PIPING MATERIALS

A. Comply with requirements in "Piping Schedule" Article for applications of pipe, tube, fitting materials, and joining methods for specific services, service locations, and pipe sizes.

2.2 HEAVY-DUTY, HUBLESS-PIPING COUPLINGS:

1. Manufacturers:
Subject to compliance with requirements, provide products by one of the following:

a. Cast Iron Soil Pipe Institute

b. Tyler Pipe

c. Charlotte Piping Company

2. Standards: ASTM C 1277 and ASTM C 1540

3. Description:
Stainless-steel shield with stainless-steel bands and tightening devices; and ASTM C 564, rubber sleeve with integral, center pipe stop.

2.3 COPPER TUBE AND FITTINGS

A. Copper DWV Tube:
ASTM B 306, drainage tube, drawn temper.

B. Copper Drainage Fittings: ASMEBI6.23, cast copper or ASMEBI6.29, wrought copper, solder joint fittings.

C. Copper Flanges: ASME Bl6.24, Class 150, cast copper with solder-joint end

1. Flange Gasket Materials:
ASME B16.21, full-face, flat, nonmetallic, asbestos-free, 1/8 inch (3.2 mm) maximum thickness unless thickness or specific material is indicated.

2. Flange Bolts and Nuts:
ASME B18.2.1, carbon steel unless otherwise indicated.

D. Solder: ASTM B 32, lead free with ASTM B 813, water flushable flux.

2.4 ABS PIPE AND FITTINGS

A. Solid Wall ABS Pipe: ASTM D 2661, Schedule 40

B. ABS Socket Fittings: ASTM D 2661, made to ASTM D 3311, drain, waste, and vent patterns

C. Solvent Cement: ASTM D 2235

1. ABS solvent cement shall have a VOC content of 325 g/L or less when calculated according to 40 CFR 59, Subpart D (EPA Method 24).

2. Solvent cement shall comply with the testing and product requirements of the California Department of Health Services' "Standard Practice for the Testing of Volatile Organic Emissions from Various Sources Using Small Scale Environmental Chambers."

2.5 PVC PIPE AND FITTINGS

A. ASolid Wall PVC Pipe: ASTM D 2665, drain, waste, and vent.

B. PVC Socket Fittings: ASTM D 2665, made to ASTM D 3311, drain, waste, and vent patterns and to fit Schedule 40 pipe.

C. Adhesive Primer: ASTM F 656

1. Adhesive primer shall have a VOC content of 550 g/L or less when calculated according to 40 CFR 59, Subpart D (EPA Method 24).

2. Adhesive primer shall comply with the testing and product requirements of the California Department of Health Services' "Standard Practice for the Testing of Volatile Organic Emissions from Various Sources Using Small Scale Environmental Chambers."

D. Solvent Cement: ASTM D 2564

1. PVC solvent cement shall have a VOC content of 510 g/L or less when calculated according to 40 CFR 59, Subpart D (EPA Method 24).

2. Solvent cement shall comply with the testing and product requirements of the California Department of Health Services' "Standard Practice for the Testing of Volatile Organic Emissions from Various Sources Using Small Scale Environmental Chambers."

2.6 SPECIALTY PIPE FITTINGS

A. Transition Couplings:

1. General Requirements:
Fitting or device for joining piping with small differences in OD's or of different materials. Include end connections same size as and compatible with pipes to be joined.

2. Fitting-Type Transition Couplings: Manufactured piping coupling or specified piping system fitting

3. Shielded, No pressure Transition Couplings:

a. Manufacturers:
Subject to compliance with requirements, provide products by one of the following:

i. Fernco Inc.

ii. Approved Equal

b. Standard: ASTM C 1173

c. Description:

i. Elastomeric, sleeve type, reducing or transition pattern. Include shear ring and corrosion resistant metal tension band and tightening mechanism on each end.

d. Sleeve Materials:

i. For Cast-Iron Soil Pipes: ASTM C 564, rubber

ii. For Plastic Pipes: ASTM F 477, elastomeric seal or ASTM D 5926, PVC

iii. For Dissimilar Pipes: ASTM D 5926, PVC or other material compatible with pipe materials being joined.

PART 3 - EXECUTION

3.7 PIPING INSTALLATION

A. Drawing plans, schematics, and diagrams indicate general location and arrangement of piping systems. Indicated locations and arrangements were used to size pipe and calculate friction loss, expansion, pump sizing, and other design considerations. Install piping as indicated unless deviations to layout are approved on coordination drawings.

B. Install piping in concealed locations unless otherwise indicated and except in equipment rooms and service areas.

C. Install piping indicated to be exposed and piping in equipment rooms and service areas at right angles or parallel to building walls. Diagonal runs are prohibited unless specifically indicated otherwise.

D. Install piping above accessible ceilings to allow enough space for ceiling panel removal.

E. Install piping at indicated slopes.

F. Install piping free of sags and bends.

G. Install fittings for changes in direction and branch connections.

H. Make changes in direction for soil and waste drainage and vent piping using appropriate branches, bends, and long-sweep bends. Sanitary tees and short-sweep 114 bends may be used on vertical stacks if change in direction of flow is from horizontal to vertical. Use long-turn, double Y-branch and 118-bend fittings if two fixtures are installed back to back or side by side with common drainpipe. Straight tees, elbows, and crosses may be used on vent lines. Do not change direction of flow more than 90 degrees. Use proper size of standard increasers and reducers if pipes of different sizes are connected. Reducing size of drainage piping in direction of flow is prohibited.

I. Lay buried building drainage piping beginning at low point of each system. Install true to grades and alignment indicated, with unbroken continuity of invert. Place hub ends of piping upstream. Install required gaskets according to manufacturer's written instructions for use of lubricants, cements, and other installation requirements. Maintain swab in piping and pull past each joint as completed.

J. Install soil and waste drainage and vent piping at the following minimum slopes unless otherwise indicated:

1. Building Sanitary Drain: 2 percent downward in direction of flow for piping NPS 2 (DN 50) and smaller; 1 percent downward in direction of flow for piping NPS 3 (DN 80) and larger.

2. Horizontal Sanitary Drainage Piping: 2 percent downward in direction of flow

3. Vent Piping: 1 percent down toward vertical fixture vent or toward vent stack

K. Install aboveground copper tubing according to CDA's "Copper Tube Handbook."

L. Install aboveground ABS piping according to ASTM D 2661

M. Install underground ABS and PVC piping according to ASTM D 2321

N. Do not enclose, cover, or put piping into operation until it is inspected and approved by authorities having jurisdiction.

O. Install sleeves for piping penetrations of walls, ceilings, and floors. Comply with requirements for sleeves specified in Section 22 05 17 "Sleeves and Sleeve Seals for Plumbing Piping."

P. Install sleeve seals for piping penetrations of concrete walls and slabs. Comply with requirements for sleeve seals specified in Section 22 05 17 "Sleeves and Sleeve Seals for Plumbing Piping."

Q. Install escutcheons for piping penetrations of walls, ceilings, and floors. Comply with requirements for escutcheons specified in Section 22 05 18 "Escutcheons for Plumbing Piping."

3.8 JOINT CONSTRUCTION

A. Join hub and spigot, cast iron soil piping with gasket joints according to CISPI's "Cast Iron Soil Pipe and Fittings Handbook" for compression joints.

B. Join copper tube and fittings with soldered joints according to ASTM B 828. Use ASTM B 813, water flushable, lead-free flux and ASTM B 32 lead free alloy solder.

C. Flanged Joints:
Align bolt holes. Select appropriate gasket material, size, type, and thickness. Install gasket concentrically positioned. Use suitable lubricants on bolt threads. Torque bolts in cross pattern.

D. Plastic, No pressure Piping, Solvent Cement Joints:
Clean and dry joining surfaces. Join pipe and fittings according to the following:

1. Comply with ASTM F 402 for safe-handling practice of cleaners, primers, and solvent cements.

2. ABS Piping: Join according to ASTM D 2235 and ASTM D 2661 Appendixes.

3. PVC Piping: Join according to ASTM D 2855 and ASTM D 2665 Appendixes.

3.9 SPECIALTY PIPE FITTING INSTALLATION

A. Transition Couplings:

1. Install transition couplings at joints of piping with small differences in OD's.

2. In Drainage Piping: Shielded, no pressure transition couplings.

3.10 HANGER AND SUPPORT INSTALLATION

A. Comply with requirements for pipe hanger and support devices and installation specified in Section 22 05 29 "Hangers and Supports for Plumbing Piping and Equipment."

B. Support horizontal piping and tubing within 12 inches (300 mm) of each fitting, valve and coupling. Support vertical piping and tubing at base and at each floor.

C. Rod diameter may be reduced one size for double-rod hangers, with 3/8-inch (10-mm) minimum rods.

1. Install supports for vertical and horizontal copper tubing every 10 feet (3 m).

2. Support piping and tubing not listed above according to MSS SP-69 and manufacturer's written instructions.

3.11 CONNECTIONS

A. Drawings indicate general arrangement of piping, fittings, and specialties.

B. Connect soil and waste piping to exterior sanitary sewerage piping. Use transition fitting to join dissimilar piping materials.

C. Where installing piping adjacent to equipment, allow space for service and maintenance of equipment.

3.12 IDENTIFICATION

A. Identify exposed sanitary waste and vent piping. Comply with requirements for identification specified in Section 22 05 53 "Identification for Plumbing Piping and Equipment."

3.13 FIELD QUALITY CONTROL

A. During installation, notify authorities having jurisdiction at least 24 hours before inspection must be made. Perform tests specified below in presence of authorities having jurisdiction.

1. Roughing in Inspection:
Arrange for inspection of piping before concealing or closing in after roughing in and before setting fixtures.

2. Final Inspection:
Arrange for final inspection by authorities having jurisdiction to observe tests specified below and to ensure compliance with requirements.

B. Reinspection:
If authorities having jurisdiction find that piping will not pass test or inspection, make required corrections and arrange for reinspection.

C. Reports: Prepare inspection reports and have them signed by authorities having jurisdiction.

D. Test sanitary drainage and vent piping according to procedures of authorities having jurisdiction or, in absence of published procedures, as follows:

1. Test for leaks and defects in new piping and parts of existing piping that have been altered, extended, or repaired. If testing is performed in segments, submit separate report for each test, complete with diagram of portion of piping tested.

2. Leave uncovered and unconcealed new, altered, extended, or replaced drainage and vent piping until it has been tested and approved. Expose work that was covered or concealed before it was tested.

3. Roughing in Plumbing Test Procedure:

Test drainage and vent piping except outside leaders on completion of roughing in. Close openings in piping system and fill with water to point of overflow, but not less than 10 foot head of water (30 kPa). From 15 minutes before inspection starts to completion of inspection, water level must not drop. Inspect joints for leaks.

4. Finished Plumbing Test Procedure:
After plumbing fixtures have been set and traps filled with water, test connections and prove they are gastight and watertight. Plug vent stack openings on roof and building drains where they leave building. Introduce air into piping system equal to pressure of l inch wg (250 Pa). Use U-tube or manometer inserted in trap of water closet to measure this pressure. Air pressure must remain constant without introducing additional air throughout period of inspection. Inspect plumbing fixture connections for gas and water leaks.

5. Repair leaks and defects with new materials and retest piping, or portion thereof, until satisfactory results are obtained.

6. Prepare reports for tests and required corrective action.

3.14 CLEANING AND PROTECTION

A. Clean interior of piping. Remove dirt and debris as work progresses.

B. Protect drains during remainder of construction period to avoid clogging with dirt and debris and to prevent damage from traffic and construction work.

C. Place plugs in ends of uncompleted piping at end of day and when work stops.

3.15 PIPING SCHEDULE

A. Flanges and unions may be used on aboveground pressure piping unless otherwise indicated.

B. Aboveground, soil and waste piping NPS 4 (DN l 00) and smaller shall be any of the following:

1. Solid-wall PVC pipe, PVC socket fittings, and solvent cemented joints. Service class, cast-iron soil pipe and fittings; gaskets; and gasketed joints.

2. Copper DWV tube, copper drainage fittings, and soldered joints.

C. Aboveground, soil and waste piping NPS 5 (DN 125) and larger shall be any of the following:

1. Solid-wall PVC pipe, PVC socket fittings, and solvent-cemented joints.

2. Service class, cast-iron soil pipe and fittings; gaskets; and gasketed joints.

D. Above ground, vent piping NPS 4 (DN l 00) and smaller shall be any of the following:

1. Solid-wall PVC pipe, PVC socket fittings, and solvent-cemented joints.

2. Service class, cast-iron soil pipe and fittings; gaskets; and gasketed joints.

3. Hubless, cast-iron soil pipe and fittings; heavy-duty hubless-piping couplings; and coupled joints.

4. Copper DWV tube, copper drainage fittings, and soldered joints.

END OF SECTION

PART 1 GENERAL

1.1 SECTION INCLUDES

A. Commercial Service Basins.

B. Commercial Service Sinks.

C. Commercial, Vitreous-China Water Closets.

D. Toilet Seats.

1.2 RELATED SECTIONS:

A. Section 23 05 00 - Common Work Results for HVAC.

B. Section 22 10 00 - Plumbing Piping.

C. Section 22 14 26.13 - Roof Drains.

1.3 REFERENCES

A. American Society of Mechanical Engineers (ASME):

1. ASME A112.18.1/CSA B125.1 - Plumbing Supply Fittings.
2. ASME A112.18.2/CSA B125.2 - Plumbing Waste Fittings.
3. ASME A112.18.6/CSA B125.6 - Flexible Water Connectors.
4. ASME A112.19.1/CSA B45.2 - Enameled Cast Iron and Enameled Steel Plumbing Fixtures.
5. ASME A112.19.2/CSA B45.1 - Vitreous China Plumbing Fixtures and Hydraulic Requirements for Water Closets and Urinals.
6. ASME A112.19.5 / CSA B45.15 - Flush Valves and Spuds for Water Closets, Urinals, and Tanks.
7. ASTM A1045 Standard Specification for Flexible Poly (Vinyl Chloride) (PVC) Gaskets used in Connection of Vitreous China Plumbing Fixtures to Sanitary Drainage Systems.
8. ASME A112.4.3. - Plastic Fittings for Connecting Water Closets to the Sanitary Drainage System.
9. ASME B1.20.1 - Pipe Threads, General Purpose, Inch.

B. American Society of Safety Engineers (ASSE):

1. ASSE 1037/ASME A112.1037/CSA B125.37 - Performance Requirements for Pressurized Flushing Devices for Plumbing Fixtures.

C. ASTM International (ASTM):

1. ASTM A1045 Standard Specification for Flexible Poly (Vinyl Chloride) (PVC) Gaskets used in Connection of Vitreous China Plumbing Fixtures to Sanitary Drainage Systems.

D. International Code Counsel:

1. ICC/ANSI A117.1 - Accessible and Usable Buildings and Facilities.

E. Plumbing and Drainage Institute:

1. PDI-WH 201 - Water Hammer Arresters.

1.4 SUBMITTALS

A. Submit under provisions of Section 01 30 00 - Administrative Requirements.

B. Product Data: Each fixture type.

1. Include dimensions, finishes, construction information, capacities, operation instructions and accessories.

C. Maintenance data for all products.

1. Repair kit information for all fixtures.

1.5 QUALITY ASSURANCE

A. Manufacturer Qualifications:

1. Minimum 5 years manufacturing similar products.

B. Regulatory Compliance Requirements:

1. Utility company supplying the water.

a. Backflow prevention.

2. Authorities having jurisdiction: Materials, installation, and testing.

1.6 DELIVERY, STORAGE, AND HANDLING

A. Deliver and store products in manufacturer's unopened packaging bearing the brand name and manufacturer's identification until ready for installation.

1. Protect internal parts, valve ends, and specialties against corrosion, dirt, and damage.

2. Store valves set in closed position.

3. Storage:

a. Indoors: Higher than ambient dew point temperature.

b. Outdoors: Watertight enclosures off ground.

PART 2 PRODUCTS

2.1 MANUFACTURERS

A. Acceptable Manufacturers for Commercial Products:

1. Zurn Industries LLC, which is located at: 511 W. Freshwater Way; Milwaukee, WI 53204; Toll Free Tel: 855-663-9876; Email: request info (zurn-info@zurn.com); Web:www.zurn.com

2. Sloan

3. Kohler

4. Toto

B. Requests for substitutions will be considered in accordance with provisions of Section 01 60 00 - Product Requirements.

2.2 COMMERCIAL LAVATORIES

A. Single piece bowl and counter top

1. Manufacturers:

a. Zurn

b. Kohler

c. American Standard

d. Requests for substitutions will be considered in accordance with provisions of Section 01 60 00 - Product Requirements.

2. Lavatory Attributes:

a. Standard: ASME A112.19.2/CSA B45.1.

b. Nominal Size:

i. Oval, 22 by 18 inches (559 by 457 mm).

c. Faucet-Hole Punching:

i. Three holes, 8-inch (203-mm) centers.

d. Faucet-Hole Location:

i. Top.

e. Color: White.

f. Mounting Material:

i. Sealant.

ii. Undercounter mounting kit.

iii. Wall bracket.

iv. Chair Carrier (wheelchair accessible).

g. Support Fixture: ASME A112.6.1M, Type II, lavatory carrier.

i. Include rectangular, steel uprights.

B. Security Vitreous-China Wall Mounted Lavatories:

1. Manufacturers:

a. Zurn

b. Kohler

c. American Standard

d. Requests for substitutions will be considered in accordance with provisions of Section 01 60 00 - Product Requirements.

2. Lavatory Attributes:

a. Standard: ASME A112.19.2/CSA B45.1.

b. Material: Vitreous china.

c. Bowl: Oval or rectangular bowl, soap depression, and wall bracket.

d. Supply Valves: Factory-installed push-button, self-closing, chrome-plated brass faucets; Hot- and Cold-Water.

e. Drain: Grid with NPS 1-1/2 (DN 40) tailpiece.

3. Waste Fittings: ASME A112.18.2/CSA B125.2.

a. Trap NPS 1-1/4 (DN 32) minimum waste.

4. Support Fixture: ASME A112.6.1M, Type II lavatory carrier.

2.3 TOILET SEATS

A. Properties:

1. Standard: IAPMO/ANSI Z124.5.
2. Acceptable Manufacturers:
   a. Zurn Industries, LLC
   b. Bemis
   c. Kohler
   d. American Standard
   e. Substitutions allowed
3. Material: Plastic.
4. Type:
   a. Heavy duty.
5. Shape:
   a. Elongated rim, open front.
6. Hinge:
   a. Self-sustaining, check.
7. Hinge Material: Noncorrosive metal.
8. Seat Cover:
   a. Not required.
9. Color: White.

2.4 SINK FAUCETS

A. Manual Type Mixing Valve: Commercial, Solid-Brass Faucets:

1. Basis-of-Design: Zurn Industries, LLC: Substitutions permitted.
   a. Model Z811-XL Series.
   b. Model Z812-XL Series.
   c. Model Z825-XL.

d. Model Z827-XL.

e. Model Z831-XL.

2. Standards:

a. ASME A112.18.1/CSA B125.1

b. NSF/ANSI 61.

3. Include hot- and cold-water indicators; coordinate faucet inlets with supplies and fixture hole punchings; coordinate outlet with spout and sink receptor.

4. Body Type:

a. Widespread.

5. Body Material: Solid brass.

6. Finish:

a. Chrome plated.

7. Maximum Flow Rate:

a. 1.5 gpm (5.7 L/m).

8. Handle(s):

a. Wrist blade, 4 inches (102 mm).

9. Mounting Type:

a. Deck, concealed.

10. Spout Type:

a. Swivel gooseneck.

11. Operation: Quarter Turn Heavy Duty Ceramic.

12. Vacuum Breaker: For hose outlet.

13. Spout Outlet:

a. Hose thread according to ASME B1.20.7.

14. Supply Fittings: Zurn - Model Z8808-XL.

15. Waste Fittings: Zurn.

a. Model Z8746 Series.

b. Model Z8743 Series.

c. Model Z8746 Series.

2.5 FAUCET SUPPLY FITTINGS

A. Basis-of-Design: Zurn Industries, LLC; Substitutions permitted

1. Model Z8808-XL.

2. Standard:

a. ASME A112.18.1/CSA B125.1.

b. NSF 61.

3. Supply Piping: Chrome-plated brass pipe or chrome-plated copper tube matching water-supply piping size. Include chrome-plated brass or stainless-steel wall flange.

4. Supply Stops: Chrome-plated brass, one-quarter-turn, ball-type or compression valve with inlet connection matching supply piping.

5. Operation:

a. Loose key.

b. Wheel-handle.

6. Risers:

a. NPS 3/8 (DN 10).

b. NPS 1/2 (DN 15).

c. Material:

i. Chrome-plate, rigid copper pipe.

ii. Chrome-plated, soft-copper flexible tube.

iii. ASME A112.18.6 / CSA B125.6, braided- or corrugated-stainless-steel flexible hose.

2.6 SINK AND LAVATORY WASTE FITTINGS

A. Basis-of-Design: Zurn Industries, LLC: Drain:

1. Model Z8746 Series Grid type with NPS 1-1/2 (DN 40) offset.

2. Model Z8743 Series.

3. Model Z8746 Series.

B. Standard: ASME A112.18.2/CSA B125.2.

C. Trap: Two-piece trap and swivel elbow and wall flange.

1. Size: NPS 1-1/2 (DN 40).

2. Stainless steel.

3. Chrome plated brass.

2.7 WATER CLOSET FLUSHOMETER VALVES

A. Lever-Handle, Diaphragm Flushometer Valves:

1. Manufacturers:

a. Zurn 1.0 gal (3.8 L) per flush.

b. Sloan

c. Substitutions are allowed

2.8 WATER CLOSET WASTE CARRIERS

A. Standard, Adjustable Blowout Style Water Closet Carriers:

1. Basis-of-Design: Zurn Industries, LLC; Substitutions are allowed:

a. Horizontal Waste Fitting:

i. Model Z1203-N.

b. Vertical Waste Fitting:

i. Model Z1204-N.

c. Water Closet Waste Carrier Attributes:

i. Standard: ASME A112.6.1M.

ii. Load Rating:

1) N = 300 lbs (136 kg).

iii. Waste-fitting to match drainage piping material and arrangement. Couplings gaskets, faceplate, and feet; Hardware to match fixture.

1) Wide space installation: Extension coupling.

iv. Connection Type:

1) No-Hub "N".

2) Hub and Spigot "H".

v. Flow Direction:

1) Right "R".

vi. Waste Pipe Diameter:

1) 3 in (76 mm).

vii. Faceplate: B (blowout style faceplate).

viii. Water Consumption: Per flush.

1) 1.28 gal (4.8 L)

ix. Water-Closet Mounting Height:

1) Handicapped/elderly according to ICC A117.1.

x. Coupling/Waste Orifice Diameter: 3 in (76 mm).

xi. Foot Type:

1) Universal (standard or prefab installations).

xii. Material: Cast Iron.

2.9 SUPPORT FIXTURES

A. Lavatory, Support Fixtures:

1. Basis-of-Design: Zurn Industries, LLC; Substitutions are allowed:

a. Model Z1231 - Concealed Arm System, with Alignment Truss Carrier.

i. Lavatory support system with concealed arms.

ii. Dura-Coated rectangular steel uprights with welded feet.

iii. Cast iron adjustable headers, concealed arms, steel sleeves, alignment truss, and mounting fasteners.

PART 3 EXECUTION

3.1 EXAMINATION

A. Verification of Conditions: Examine areas and conditions under which Work is to be performed and identify conditions that may be detrimental to proper or timely completion.

1. Rough-in for water-supply, sanitary drainage and vent piping systems: Verify locations; pipe and connection.

B. Fixture and Valve Interiors: Clean and free of foreign matter, and corrosion. Remove packing used to prevent disc movement.

1. Operate valves from fully open to fully closed positions.

2. Verify guides and seats are clean and free of foreign matter, and corrosion.

C. Threads on Valves Fittings and Fixtures: Inspect valve and mating pipe for form and cleanliness.

D. Mating Flange Faces: Inspect for conditions that may cause leaking.

1. Bolting: Proper size, length, and material.

2. Gaskets: Proper size and material composition suitable for application; defect and damage free.

E. Replace defective fixtures and valves with new.

F. Do not proceed until unsatisfactory conditions have been corrected.

3.2 INSTALLATION

A. All Fixtures: level and plumb.

B. Attach all support framing to building substrate per manufacturer's written instructions.

C. Wall-mounted fixtures: Install off-the-floor carrier supports.

D. Water-supply piping: Ball or gate shutoff valves on supply to each fixture connected to domestic-water piping. See section 23 05 00 - Common Work Results for HVAC "Common Work Results for Plumbing Piping."

1. Locations: easily accessible.

E. Fixture drain outlets: Install trap and waste piping to be connected to sanitary drainage system.

F. Joints between fixtures and walls: Seal with silicone sealant:

1. Sanitary, one-part, mildew-resistant. Match colors.

G. Flushometers:

1. Water-supply fitting on supply to water closet.

2. Supply piping: Attach to supports or substrate in space behind fixture.

3. Accessible water closets: Handle on lever-handle flushometer to be mounted on open side of water closet. Be sure actuators accessible to with disabilities.

3.3 FIELD QUALITY CONTROL

A. Test and inspect per authorities having jurisdiction.

B. Piping Tests: prior to covering and after curing and setting of concrete thrust blocks. Fill and pressurize pipeline to test pressure a minimum of 24 hours before testing.

1. Use potable water.

C. Hydrostatic Tests:

1. Test Pressure: One-and-one-half times the working pressure for two hours.

a. Increase pressure at increments of 50-psig (350-kPa).

i. Inspect joints.

b. Maintain test pressure for one hour, minimum.

c. Decrease test pressure to zero psig (zero kPa).

d. Increase pressure at increments of 50-psig (350-kPa).

i. Inspect joints.

e. Maintain test pressure for one hour, minimum.

f. Allowable leakage: 2 quarts (1.89 L) per hour per 100 joints.

2. Remake leaking joints with new materials and repeat test until leakage is within allowed limits.

D. Prepare test and inspection reports.

3.4 IDENTIFICATION

A. Comply with requirements for identification specified in Section 23 05 53 - Identification for HVAC Piping and Equipment "Identification for Plumbing Piping Systems."

B. Comply with requirements for identification specified in Section 26 05 53- "Identification for Electrical Systems."

3.5 ADJUSTING

A. Flow regulators: Proper flow of water through fixtures.

B. Flushometer valves: Adjust water pressure.

C. Replace damaged fixtures, fittings, and controls

3.6 CLEANING

A. Remove paint spots, dirt, and debris. Damaged finish to match original finish.

B. Clean fixtures, according to manufacturer's written instructions.

C. Provide protective covering for installed fixtures.

END OF SECTION

PART 1 GENERAL

1.1 SECTION INCLUDES

A. Commercial sinks.

1.2 RELATED SECTIONS

A. Division 22 Section "Domestic Water Piping Specialties."

1.3 REFERENCES

A. American National Standards Institute (ANSI):

1. ANSI/ICPA SS-1-2001 - Performance Standard for Solid Surface Materials.
2. ICC/ANSI A117.1 - Accessible And Usable Buildings And Facilities.

B. ASME International (ASME):

1. ASME A112.18.1 - Plumbing Fixture Fittings.
2. ASME A112.18.2 - Plumbing Fixture Waste Fittings.
3. ASME A112.19.2M - Vitreous China Plumbing Fixtures.
4. ASME A112.19.4M - Porcelain Enameled Formed Steel Plumbing Fixtures.

C. International Association of Plumbing and Mechanical Officials (IAPMO):

D. Uniform Plumbing Code (UPC).

E. NSF International (NSF):

1. NSF 61 - Drinking Water System Components - Health Effects; Sections 1 through 9.

1.4 ACTION SUBMITTALS

A. Product Data: For each product indicated.

B. Wiring Diagram: For products requiring electrical power.

1.5 INFORMATIONAL SUBMITTALS

A. Counter cutouts and plumbing connections requirements.

1.6 CLOSEOUT SUBMITTALS

A. Cleaning and maintenance data.

1.7 QUALITY ASSURANCE

A. Comply with NSF 61.

1.8 WARRANTY

A. Special Manufacturer's Warranty: Provide manufacturer's standard form in which manufacturer agrees to repair or replace products that fail in materials or workmanship for a period of 10 years from date of shipping from manufacturer.

PART 2 PRODUCTS

2.1 COUNTERTOP-SUPPORTED SINKS

A. Integral Solid Surface Sink: Constructed of solid surface material with integral bowl, contoured front apron, coved backsplash, with deck mounted faucets, and waste receptacle openings. Unit includes waste and supply connections to wall, concealed by high impact polymer trap cover.

B. Basis of Design Manufacturer/Model: Bradley, TerreonRE Classroom Sink or approved equal.

1. Bowl Size: 10 by 14 inch (254 by 356 mm), 8 inch (203 mm) deep.

2. Deck Color: As selected by Owner's Representative from manufacturer's full line.

3. Bowl Color: Match deck color.

C. Soap Dispenser : 32 oz. (946 mL) plastic globe, with 4-inch (102 mm) spout.

2.2 SUPPLY FITTINGS

A. NSF Standard: Comply with NSF/ANSI 61 for supply-fitting materials that will be in contact with potable water.

1. Standard: ASME A112.18.1/CSA B125.1.

2. Supply Piping: Chrome-plated brass pipe or chrome-plated copper tube matching water-supply piping size. Include chrome-plated brass or stainless-steel wall flange.

3. Supply Stops: Chrome-plated brass, one-quarter-turn, ball-type or compression valve with inlet connection matching supply piping.

4. Operation: Wheel handle.

B. Risers:

1. Size: NPS 3/8 (DN 10).

2. Type: ASME A112.18.6, braided or corrugated stainless-steel flexible hose.

2.3 WASTE FITTINGS

A. Standard: ASME A112.18.2/CSA B125.2.

B. Drain: Grid type with NPS 1-1/2 (DN 40) offset and straight tailpiece.

C. Trap:

1. Size: NPS 1-1/2 (DN 40).

2. Material: Stainless-steel, two-piece trap and swivel elbow with 0.012-inch- (0.30-mm-) thick stainless-steel tube to wall; and stainless-steel wall flange.

PART 3 EXECUTION

3.1 EXAMINATION

A. Examine roughing-in of water supply and sanitary drainage and vent piping systems to verify actual locations of piping connections before sink installation.

B. Examine walls, floors, and counters for suitable conditions where sinks will be installed.

C. Proceed with installation only after unsatisfactory conditions have been corrected.

3.2 INSTALLATION

A. Install sinks level and plumb according to roughing-in drawings.

B. Install supports, affixed to building substrate, for wall-hung sinks.

C. Install accessible wall-mounted sinks at handicapped/elderly mounting height according to ICC/ANSI A117.1.

D. Set floor-mounted sinks in leveling bed of cement grout.

E. Install water-supply piping with stop on each supply to each sink faucet.

1. Exception: Use ball, gate, or globe valves if supply stops are not specified with sink. Comply with valve requirements specified in Division 22 Section "General-Duty Valves for Plumbing Piping."

2. Install stops in locations where they can be easily reached for operation.

F. Install wall flanges or escutcheons at piping wall penetrations in exposed, finished locations. Use deep-pattern escutcheons if required to conceal protruding fittings. Comply with escutcheon requirements specified in Division 22 Section "Escutcheons for Plumbing Piping."

G. Seal joints between sinks and counters, floors, and walls using sanitary-type, one-part, mildew-resistant silicone sealant. Match sealant color to fixture color. Comply with sealant requirements specified in Division 07 Section "Joint Sealants."

H. Install protective shielding pipe covers and enclosures on exposed supplies and waste piping of accessible sinks. Comply with requirements in Division 22 Section "Plumbing Piping Insulation."

3.3 CONNECTIONS

A. Connect sinks with water supplies, stops, and risers, and with traps, soil, waste, and vent piping. Use size fittings required to match fixtures.

B. Comply with water piping requirements specified in Division 22 Section "Domestic Water Piping."

C. Comply with soil and waste piping requirements specified in Division 22 Section "Sanitary Waste and Vent Piping."

3.4 ADJUSTING

A. Operate and adjust sinks and controls. Replace damaged and malfunctioning sinks, fittings, and controls.

B. Adjust water pressure at faucets to produce proper flow.

3.5 CLEANING AND PROTECTION

A. After completing installation of sinks, inspect and repair damaged finishes.

B. Clean sinks, faucets, and other fittings with manufacturers' recommended cleaning methods and materials.

C. Provide protective covering for installed sinks and fittings.

D. Do not allow use of sinks for temporary facilities unless approved in writing by Owner.

END OF SECTION

PART 1 - GENERAL

1.1 SUMMARY

A. Section includes general requirements for single-phase and polyphase, general-purpose, horizontal, small and medium, squirrel cage induction motors for use on ac power systems up to 600 V and installed at equipment manufacturer's factory or shipped separately by equipment manufacturer for field installation.

1.2 COORDINATION

A. Coordinate features of motors, installed units, and accessory devices to be compatible with the following:

1. Motor controllers
2. Torque, speed, and horsepower requirements of the load
3. Ratings and characteristics of supply circuit and required control sequence
4. Ambient and environmental conditions of installation location

PART 2 • PRODUCTS

2.1 GENERAL MOTOR REQUIREMENTS

A. Comply with NEMA MG l unless otherwise indicated.

2.2 MOTOR CHARACTERISTICS

A. Duty: Continuous duty at ambient temperature of 40°C and at altitude of 3300 feet (1000 m) above sea level.

B. Capacity and Torque Characteristics:
Sufficient to start, accelerate, and operate connected loads at designated speeds, at installed altitude and environment, with indicated operating sequence, and without exceeding nameplate ratings or considering service factor.

2.3 POLYPHASE MOTORS

A. Description: NEMA MG l, Design B, medium induction motor

B. Efficiency: Energy efficient, as defined in NEMA MG 1

C. Service Factor: 1.15

D. Multispeed Motors: Variable torque.

1. For motors with 2: I speed ratio, consequent pole, single winding.
2. For motors with other than 2:l speed ratio, separate winding for each speed.

E. Rotor: Random wound, squirrel cage.

F. Bearings: Grease-able, shielded, antifriction ball bearings suitable for radial and thrust loading

G. Temperature Rise: Match insulation rating

H. Insulation: Class F

I. Code Letter Designation:

1. Motors 15 HP and Larger: NEMA starting Code F or Code G

2. Motors Smaller than 15 HP: Manufacturer's standard starting characteristic.

J. Enclosure Material:
Cast iron for motor frame sizes 324T and larger; rolled steel for motor frame sizes smaller than 324T

2.3 POLYPHASE MOTORS WITH ADDITIONAL REQUIREMENTS

A. Motors Used with Reduced-Voltage and Multispeed Controllers:
Match wiring connection requirements for controller with required motor leads. Provide terminals in motor terminal box, suited to control method.

B. Motors Used with Variable Frequency Controllers:
Ratings, characteristics, and features coordinated with and approved by controller manufacturer.

1. Windings:
Copper magnet wire with moisture-resistant insulation varnish, designed and tested to resist transient spikes, high frequencies, and short time rise pulses produced by pulse width modulated inverters.

2. Energy- and Premium-Efficient Motors: Class B temperature rise; Class F insulation

3. Inverter-Duty Motors: Class F temperature rise; Class H insulation

4. Thermal Protection: Comply with NEMA MG 1 requirements for thermally protected motors.

2.4 SINGLE-PHASE MOTORS

A. Motors larger than 1/20 hp shall be one of the following, to suit starting torque and requirements of specific motor application:

1. Permanent-split capacitor

2. Split phase

3. Capacitor start, inductor run

4. Capacitor start, capacitor run

B. Multispeed Motors:
Variable-torque, permanent-split-capacitor type

C. Bearings:
Pre-lubricated, antifriction ball bearings or sleeve bearings suitable for radial and thrust loading.

D. Motors 1/20 HP and Smaller:
Shaded-pole type.

E. Thermal Protection:
Internal protection to automatically open power supply circuit to motor when winding temperature exceeds a safe value calibrated to temperature rating of motor insulation. Thermal protection device shall automatically reset when motor temperature returns to normal range.

END OF SECTION

PART 1 - GENERAL

1.1 SUMMARY

A. Section includes:

1. Sleeves,

2. Sleeve-seal systems,

3. Grout.

1.2 ACTION SUBMITTALS

A. Provide Data: For each type of product indicated.

PART 2 - PRODUCTS

2.1 SLEEVES

A. Galvanized-Steel Pipe Sleeves: ASTM A 53/A 53M, Type E, Grade B, Schedule 40, zinc coated, with plain ends

B. PVC-Pipe Sleeves: ASTM D 1785, Schedule 40

2.2 SLEEVE-SEAL SYSTEMS

A. Manufacturers:
Subject to compliance with requirements, available manufacturers offering products that may be incorporated into the Work include, but are not limited to, the following:

1. Advance Products & Systems, Inc.

2. CALPICO, Inc.

3. Metraflex Company (The)

4. Pipeline Seal and Insulator, Inc.

5. Proco Products, Inc.

B. Description:
Modular sealing-element unit, designed for field assembly, for filling annular space between piping and sleeve.

1. Sealing Elements:
EPDM-Rubber interlocking links shaped to fit surface of pipe. Include type and number required for pipe material and size of pipe.

2. Connecting Bolts and Nuts:
Carbon steel, with corrosion-resistant coating. Stainless steel of length required to secure pressure plates to sealing elements.

2.3 GROUT

A. Standard:
ASTM C 1107/C 1107M, Grade B, post-hardening and volume-adjusting, dry, hydraulic cement grout

B. Characteristics: Non-shrink; recommended for interior and exterior applications

C. Design Mix: 5000-psi (34.5-MPa), 28-day compressive strength

D. Packaging: Premixed and factory packaged.

PART 3 - EXECUTION

3.1 SLEEVE INSTALLATION

A. Install sleeves for piping passing through penetrations in floors, partitions, roofs, and walls.

B. For sleeves that will have sleeve-seal system installed, select sleeves of size large enough to provide 1-inch (25-mm) annular clear space between piping and concrete slabs and walls

1. Sleeves are not required for core-drilled holes.

C. Install sleeves for pipes passing through interior partitions.

1. Cut sleeves to length for mounting flush with both surfaces.

2. Install sleeves that are large enough to provide 1/4-inch (6.4 mm) annular clear space between sleeve and pipe or pipe insulation.

3. Seal annular space between sleeve and piping or piping insulation; use joint sealants appropriate for size, depth, and location of joint. Comply with requirements for sealants specified in Section 07900 "Joint Sealers."

D. Fire-Barrier Penetrations:
Maintain indicated fire rating of walls, partitions, ceilings, and floors at pipe penetrations. Seal pipe penetrations with firestop materials. Comply with requirements for fire stopping specified in Section 07210 "Building Insulation."

3.2 SLEEVE-SEAL SYSTEM INSTALLATION

A. Install sleeve-seal system in sleeves in exterior concrete walls and slabs-on-grade at service piping entries into building.

B. Select type, size, and number of sealing elements required for piping material and size and for sleeve ID or hole size. Position piping in center of sleeve. Center piping in penetration, assemble sleeve seal system components, and install in annular space between piping and sleeve. Tighten bolts against pressure plates that cause sealing elements to expand and make a watertight seal.

3.3 SLEEVE AND SLEEVE-SEAL SCHEDULE

A. Use sleeves and sleeve seals for the following piping-penetration applications:

1. Exterior Concrete Walls above Grade:

   a. Piping smaller than NPS 6 (DN 150): Galvanized steel pipe sleeves.

   b. Piping NPS 6 (DN 150) and larger: Galvanized steel pipe sleeves.

2. Concrete Slabs-on-Grade:

   a. Piping smaller than NPS 6 (DN 150): Galvanized steel pipe sleeves with sleeve seal system.

      i. Select sleeve size to allow for l inch (25 mm) annular clear space between piping and sleeve for installing sleeve seal system.

   b. Piping NPS 6 (DN 150) and larger: Galvanized-steel-pipe sleeves with sleeve seal system

      i. Select sleeve size to allow for l inch (25 mm) annular clear space between piping and sleeve for installing sleeve-seal system.

3. Interior Partitions:

   a. Piping smaller than NPS 6 (DN 150): Galvanized steel pipe sleeves

   b. Piping NPS 6 (DN 150) and larger: Galvanized steel sheet sleeves

END OF SECTION

PART 1 - GENERAL

1.1 SUMMARY

A. Section Includes:

1. Metal pipe hangers and supports
2. Trapeze pipe hangers
3. Thermal-hanger shield inserts
4. Fastener systems
5. Equipment supports

1.2 PERFORMANCE REQUIREMENTS

A. Structural Performance:
Hangers and supports for HVAC piping and equipment shall withstand the effects of gravity loads and stresses within limits and under conditions indicated according to ASCE/SEI 7

1. Design supports for multiple pipes capable of supporting combined weight of supported systems, system contents, and test water.
2. Design equipment supports capable of supporting combined operating weight of supported equipment and connected systems and components.

B. Seismic Performance:

1. Comply with SECTION 220548 – VIBRATION AND SEISMIC CONTROLS FOR PLUMBING, PIPING, AND EQUIPMENT

1.3 ACTION SUBMITTALS

A. Product Data:
For each type of product indicated

PART 2 - PRODUCTS

2.1 METAL PIPE HANGERS AND SUPPORTS

A. Stainless Steel Pipe Hangers and Supports:Comply with SECTION 05500 – MISCELLANEOUS METALWORK

1. Description: MSS SP-58, Types 1 through 58, factory-fabricated components
2. Galvanized Metallic Coatings: Pre-galvanized or hot dipped
3. Padded Hangers: Hanger with fiberglass or other pipe insulation pad or cushion to support bearing surface of piping

4. Hanger Rods: Continuous thread rod, nuts, and washer made of stainless steel

B. Copper Pipe Hangers:

1. Description: MSS SP-58, Types 1 through58, copper coated steel, factory-fabricated components

2. Hanger Rods: Continuous thread rod, nuts, and washer made of copper-coated steel.

2.2 TRAPEZE PIPE HANGERS

A. Description: MSS SP-69, Type 59, shop or field fabricated pipe support hanger rods, nuts, saddles, and U-bolts.

2.3 THERMAL-HANGER SHIELD INSERTS

A. For Trapeze or Clamped Systems: Shield shall cover entire circumference of pipe.

B. For Clevis or Band Hangers: Shield shall cover lower 180 degrees of pipe.

2.4 FASTENER SYSTEMS

A. A. Powder-Actuated Fasteners: Threaded steel stud, for use in hardened Portland cement concrete with pull out, tension, and shear capacities appropriate for supported loads and building materials where used.

B. Mechanical Expansion Anchors:
Insert wedge type, stainless steel anchors, for use in hardened Portland cement concrete; with pull-out, tension, and shear capacities appropriate for supported loads and building materials where used.

2.5 EQUIPMENT SUPPORTS

A. Description:
Welded, shop or field fabricated equipment support made from structural carbon steel shapes. Comply with SECTION 220548 – VIBRATION AND SEISMIC CONTROLS FOR PLUMBING, PIPING, AND EQUIPMENT

2.6 MISCELLANEOUS MATERIALS

A. Structural Steel: ASTM A 36/A 36M, carbon steel plates, shapes, and bars; black and galvanized.

B. Grout:
ASTM C 1107, factory mixed and packaged, dry, hydraulic cement, non-shrink and nonmetallic grout; suitable for interior and exterior applications.

1. Properties: Non-staining, noncorrosive, and nongaseous

2. Design Mix: 5000 psi (34.5 MPa), 28-day compressive strength

PART 3 - EXECUTION

3.1 HANGER AND SUPPORT INSTALLATION

A. Metal Pipe Hanger Installation:
Comply with MSS SP-69 and MSS SP-89. Install hangers, supports, clamps, and attachments as required to properly support piping from the building structure. Comply with SECTION 220548 – VIBRATION AND SEISMIC CONTROLS FOR PLUMBING, PIPING, AND EQUIPMENT

B. Metal Trapeze Pipe Hanger Installation:
Comply with MSS SP-69 and MSS SP-89. Arrange for grouping of parallel runs of horizontal piping, and support together on field fabricated trapeze pipe hangers. Comply with SECTION 220548 – VIBRATION AND SEISMIC CONTROLS FOR PLUMBING, PIPING, AND EQUIPMENT

1. Pipes of Various Sizes:
Support together and space trapezes for smallest pipe size or install intermediate supports for smaller diameter pipes as specified for individual pipe hangers.

2. Field fabricate from ASTM A 36/A 36M, carbon steel shapes selected for loads being supported. Weld steel according to AWS D1.1/D1.1 M.

C. Fastener System Installation:

1. Install powder actuated fasteners for use in lightweight concrete or concrete slabs less than 4 inches (100 mm) thick in concrete after concrete is placed and completely cured. Use operators that are licensed by powder actuated tool manufacturer. Install fasteners according to powder actuated tool manufacturer's operating manual.

2. Install mechanical expansion anchors in concrete after concrete is placed and completely cured. Install fasteners according to manufacturer's written instructions.

D. Install hangers and supports complete with necessary attachments, inserts, bolts, rods, nuts, washers, and other accessories.

E. Equipment Support Installation: Fabricate from welded structural steel shapes.

F. Install hangers and supports to allow controlled thermal movement of piping systems, to permit freedom of movement between pipe anchors, and to facilitate action of expansion joints, expansion loops, expansion bends, and similar units.

G. Install building attachments within concrete slabs or attach to structural steel. Install additional attachments at concentrated loads, including valves, flanges, and strainers, NPS 2-1/2 (DN 65) and larger and at changes in direction of piping. Install concrete inserts before concrete is placed; fasten inserts to forms and install reinforcing bars through openings at top of inserts.

H. Load Distribution:

1. Install hangers and supports so that piping live and dead loads and stresses from movement will not be transmitted to connected equipment.

I. Pipe Slopes:

Install hangers and supports to provide indicated pipe slopes and to not exceed maximum pipe deflections allowed by ASME B31.9 for building services piping.

2. Comply with SECTION 220529 – HANGERS AND SUPPORTS FOR PLUMBING PIPING AND EQUIPMENT

3. Comply with SECTION 221316 – SANITARY WATER AND VENT PIPING

J. Insulated Piping:

1. Attach clamps and spacers to piping.

   a. Piping Operating above Ambient Air Temperature: Clamp may project through insulation.

   b. Piping Operating below Ambient Air Temperature: Use thermal hanger shield insert with clamp sized to match OD of insert.

   c. Do not exceed pipe stress limits allowed by ASME B31.9 for building services piping and SECTION 220529 – HANGERS AND SUPPORTS FOR PLUMBING PIPING AND EQUIPMENT

2. Install MSS SP-58, Type 39, protection saddles if insulation without vapor barrier is indicated. Fill interior voids with insulation that matches adjoining insulation.

   a. Option: Thermal hanger shield inserts may be used. Include steel weight distribution plate for pipe NPS 4 (DN 100) and larger if pipe is installed on rollers.

3. Install MSS SP-58, Type 40, protective shields on cold piping with vapor barrier. Shields shall span an arc of 180 degrees.

   a. Option: Thermal-hanger shield inserts may be used. Include steel weight distribution plate for pipe NPS 4 (DN 100) and larger if pipe is installed on rollers.

4. Shield Dimensions for Pipe:
Not less than the following:

   a. NPS 114 to NPS 3-1/2 (DN 8 to DN 90): 12 inches (305 mm) long and 0.048 inch (1.22 mm) thick.

   b. NPS 4 (DN 100): 12 inches (305 mm) long and 0.06 inch (1.52 mm) thick.

   c. NPS 5 and NPS 6 (DN 125 and DN 150): 18 inches (457 mm) long and 0.06 inch (1.52 mm) thick.

5. Thermal Hanger Shields: Install with insulation same thickness as piping insulation.

3.2 EQUIPMENT SUPPORTS

A. Fabricate structural steel stands to suspend equipment from structure overhead or to support equipment above floor.

B. Grouting: Place grout under supports for equipment and make bearing surface smooth.

C. Provide lateral bracing, to prevent swaying, for equipment supports. Comply with SECTION 220548 – VIBRATION AND SEISMIC CONTROLS FOR PLUMBING, PIPING, AND EQUIPMENT

3.3 METAL FABRICATIONS

A. Cut, drill, and fit miscellaneous metal fabrications for trapeze pipe hangers and equipment supports.

B. Fit exposed connections together to form hairline joints. Field weld connections that cannot be shop welded because of shipping size limitations.

C. Field Welding:
Comply with AWS D1.1/Dl.1M procedures for shielded, metal arc welding; appearance and quality of welds; and methods used in correcting welding work; and with the following:

1. Use materials and methods that minimize distortion and develop strength and corrosion resistance of base metals.

2. Obtain fusion without undercut or overlap.

3. Remove welding flux immediately.

4. Finish welds at exposed connections so no roughness shows after finishing and so contours of welded surfaces match adjacent contours.

3.4 ADJUSTING

A. Hanger Adjustments:
Adjust hangers to distribute loads equally on attachments and to achieve indicated slope of pipe.

B. Trim excess length of continuous thread hanger and support rods to 1 1/2 inches (40 mm).

3.5 PAINTING

A. Touchup:
Clean field welds and abraded areas of shop paint. Paint exposed areas immediately after erecting hangers and supports. Use same materials as used for shop painting for touching up field-painted surfaces.

1. Apply paint by brush or spray to provide a minimum dry film thickness of 2.0 mils (0.05 mm).

2. Touchup:
Cleaning and touchup painting of field welds, bolted connections, and abraded areas of shop paint on miscellaneous metal are specified in Division 9.

B. Galvanized Surfaces:
Clean welds, bolted connections, and abraded areas and apply galvanizing-repair paint to comply with ASTM A 780 and Division 9.

3.6 HANGER AND SUPPORT SCHEDULE

A. Specific hanger and support requirements are in SECTION 220529 – HANGERS AND SUPPORTS FOR PLUMBING PIPING AND EQUIPMENT.

B. Comply with MSS SP-69 for pipe hanger selections and applications that are not specified in SECTION 220529 – HANGERS AND SUPPORTS FOR PLUMBING PIPING AND EQUIPMENT.

C. Use hangers and supports with galvanized metallic coatings for piping and equipment that will not have field applied finish.

D. Use nonmetallic coatings on attachments for electrolytic protection where attachments are in direct contact with copper tubing.

E. Use carbon steel pipe hangers and supports and metal trapeze pipe hangers and attachments for general service applications.

F. Use copper-plated pipe hangers and copper or stainless steel attachments for copper piping and tubing.

G. Use thermal-hanger shield inserts for insulated piping and tubing.

H. Horizontal Piping Hangers and Supports:
Unless otherwise indicated and except as specified in piping system Sections 220529 – HANGERS AND SUPPORTS FOR PLUMBING PIPING AND EQUIPMENT and 221316 – SANITARY WATER AND VENT PIPING, install the following types:

1. Adjustable, Steel Clevis Hangers (MSS Type l): For suspension of uninsulated or insulated, stationary pipes NPS l/2 to NPS 30 (DN 15 to DN 750).

2. Yoke-Type Pipe Clamps (MSS Type 2): For suspension of up to 1050°F (566°C), pipes NPS 4 to NPS 24 (DN 100 to DN 600), requiring up to 4 inches (100 mm) of insulation.

3. Carbon or Alloy-Steel, Double-Bolt Pipe Clamps (MSS Type 3):
For suspension of pipes NPS 3/4 to NPS 36 (DN 20 to DN 900), requiring clamp flexibility and up to 4 inches (100 mm) of insulation.

4. Adjustable, Steel Band Hangers (MSS Type 7): For suspension of uninsulated, stationary pipes NPS l/2 to NPS 8 (DN 15 to DN 200).

5. U-Bolts (MSS Type 24): For support of heavy pipes NPS l/2 to NPS 30 (DN 15 to DN 750).

6. Single-Pipe Rolls (MSS Type 41): For suspension of pipes NPS l to NPS 30 (DN 25 to DN 750), from two rods if longitudinal movement caused by expansion and contraction might occur.

7. Complete Pipe Rolls (MSS Type 44): For support of pipes NPS 2 to NPS 42 (DN 50 to DN 1050) if longitudinal movement caused by expansion and contraction might occur but vertical adjustment is not necessary.

I. Vertical Piping Clamps:
Unless otherwise indicated and except as specified in piping system Sections, install the following types:

1. Extension Pipe or Riser Clamps (MSS Type 8): For support of pipe risers NPS 3/4 to NPS 24 (DN 24 to DN 600).

2. Carbon- or Alloy-Steel Riser Clamps (MSS Type 42):
For support of pipe risers NPS 3/4 to NPS 24 (DN 20 to DN 600) if longer ends are required for riser clamps.

J. Hanger Rod Attachments: Unless otherwise indicated and except as specified in piping system Sections, install the following types:

1. Steel Turnbuckles (MSS Type 13): For adjustment up to 6 inches (150 mm) for heavy loads.

2. Steel Clevises (MSS Type 14): For 120° to 450°F (49° to 232°C) piping installations.

K. Building Attachments:
Unless otherwise indicated and except as specified in piping system Sections, install the following types:

1. Steel or Malleable Concrete Inserts (MSS Type 18): For upper attachment to suspend pipe hangers from concrete ceiling

2. Top-Beam C-Clamps (MSS Type 19): For use under roof installations with bar-joist construction, to attach to top flange of structural shape

3. Side Beam or Channel Clamps (MSS Type 20): For attaching to bottom flange of beams, channels, or angles

4. Center-Beam Clamps (MSS Type 21): For attaching to center of bottom flange of beams

5. C-Clamps (MSS Type 23): For structural shapes

6. Welded-Steel Brackets:
For support of pipes from below, or for suspending from above by using clip and rod. Use one of the following for indicated loads:

a. Light (MSS Type 31): 750 lb (340 kg)

b. Medium (MSS Type 32): 1500 lb (680 kg)

c. Heavy (MSS Type 33): 3000 lb (1360 kg).

7. Side-Beam Brackets (MSS Type 34): For sides of steel or wooden beams

8. Plate Lugs (MSS Type 57): For attaching to steel beams if flexibility at beam is required

L. Saddles and Shields:
Unless otherwise indicated and except as specified in piping system Sections, install the following types:

1. Steel-Pipe-Covering Protection Saddles (MSS Type 39): To fill interior voids with insulation that matches adjoining insulation.

2. Protection Shields (MSS Type 40): Of length recommended in writing by manufacturer to prevent crushing insulation

3. Thermal-Hanger Shield Inserts: For supporting insulated pipe

M. Spring Hangers and Supports:
Unless otherwise indicated and except as specified in piping system Sections, install the following types:

1. Spring Cushions (MSS Type 48): For light loads if vertical movement does not exceed 1-1/4 inches (32 mm)

2. Spring-Cushion Roll Hangers (MSS Type 49): For equipping Type 41, roll hanger with springs

3. Variable-Spring Base Supports (MSS Type 52):
Preset to indicated load and limit variability factor to 25 percent to allow expansion and contraction of piping system from base support.

N. Comply with MSS SP-69 for trapeze pipe-hanger selections and applications that are not specified in piping system Sections.

O. Use mechanical expansion anchors instead of building attachments where required in concrete construction.

END OF SECTION

PART 1 - GENERAL

1.1 SUMMARY

A. This Section includes the following:

1. Isolation pads
2. Isolation mounts
3. Restrained elastomeric isolation mounts
4. Spring isolators
5. Housed spring mounts
6. Elastomeric hangers
7. Spring hangers
8. Spring hangers with vertical-limit stops
9. Pipe riser resilient supports
10. Resilient pipe guides
11. Air-mounting system
12. Restrained vibration isolation roof-curb rails
13. Seismic snubbers
14. Restraining braces and cables
15. Vibration isolation equipment bases

1.2 DEFINITIONS

A. IBC: International Building Code

B. ICC-ES: ICC-Evaluation Service

C. OSHPD: Office of Statewide Health Planning and Development for the State of California

1.3 PERFORMANCE REQUIREMENTS

A. Wind-Restraint Loading:

1. Basic Wind Speed: 175 mph
2. Building Classification Category: IV

3. Minimum 10 lb/sq. ft. (48.8 kg/sq. m) multiplied by the maximum area of the HVAC component projected on a vertical plane that is normal to the wind direction, and 45 degrees either side of normal.

1.4 ACTION SUBMITTALS

A. Product Data:
For the following:

1. Include rated load, rated deflection, and overload capacity for each vibration isolation device.

2. Illustrate and indicate style, material, strength, fastening provision, and finish for each type and size of seismic-restraint component used.

3. Interlocking Snubbers: Include ratings for horizontal, vertical, and combined loads.

B. Delegated-Design Submittal:
For vibration isolation and seismic restraint details indicated to comply with performance requirements and design criteria, including analysis data signed and sealed by the qualified professional engineer responsible for their preparation.

1.5 INFORMATIONAL SUBMITTALS

A. Coordination Drawings:
Show coordination of seismic bracing for HVAC piping and equipment with other systems and equipment in the vicinity, including other supports and seismic restraints.

1.6 CLOSEOUT SUBMITTALS

A. Operation and Maintenance Data: For air mounting systems to include in operation and maintenance manuals.

1.7 QUALITY ASSURANCE

A. Comply with seismic-restraint requirements in SECTION 220548 – VIBRATION AND SEISMIC CONTROLS FOR PLUMBING, PIPING, AND EQUIPMENT unless requirements in this Section are more stringent.

PART 2 - PRODUCTS

2.1 VIBRATION ISOLATORS

A. Available Manufacturers:
Subject to compliance with requirements, manufacturers offering products that may be incorporated into the Work include, but are not limited to, the following:

1. Ace Mounting Co., Inc.
2. Amber/Booth Company. Inc.
3. California Dynamic Corporation
4. Isolation Technology, Inc.
5. Kinetics Noise Control
6. Mason Industries
7. Vibration Eliminator Co., Inc.
8. Vibration Isolation
9. Vibration Mounting & Controls, Inc.

2.2 AIR MOUNTING SYSTEMS

A. Available Manufacturers:
Subject to compliance with requirements, manufacturers offering products that may be incorporated into the Work include, but are not limited to, the following:

1. California Dynamic Corporation
2. Firestone Industrial Products Company
3. Kinetics Noise Control
4. Mason Industries
5. Vibration Eliminator Co., Inc.

2.3 VIBRATION ISOLATION EQUIPMENT BASES

A. Available Manufacturers:
Subject to compliance with requirements, manufacturers offering products that may be incorporated into the Work include, but are not limited to, the following:

1. Amber/Booth Company, Inc.
2. California Dynamics Corporation
3. Isolation Technology, Inc.
4. Kinetics Noise Control
5. Mason lndustries
6. Vibration Eliminator Co. Inc.

7. Vibration Isolation.

8. Vibration Mounting & Controls. Inc.

2.4 SEISMIC RESTRAINT DEVICES

A. Available Manufacturers:
Subject to compliance with requirements, manufacturers offering products that may be incorporated into the Work include, but are not limited to, the following:

1. Amber/Booth Company. Inc.

2. California Dynamic Corporation

3. Cooper B-Line. Inc.; a division of Cooper Industries

4. Hilti, Inc.

5. Kinetic Noise Control

6. Loos & Co.; Cableware Division

7. Mason Industries

8. TOLCO Incorporated; a brand of NIBCO INC.

9. Unistrut; Tyco International, Ltd.

2.5 FACTORY FINISHES

A. Finish: Manufacturer's standard prime coat finish ready for field painting.

B. Finish: Manufacturer's standard paint applied to factory assembled and tested equipment before shipping.

1. Powder coating on springs and housings

2. All hardware shall be galvanized. Hot dip galvanize metal components for exterior use.

3. Baked enamel or powder coat for metal components on isolators for interior use.

4. Color code or otherwise mark vibration isolation and seismic and wind control devices to indicate capacity range.

PART 3 - EXECUTION

3.1 EXAMINATION

A. Examine areas and equipment to receive vibration isolation and seismic and wind control devices for compliance with requirements for installation tolerances and other conditions affecting performance.

B. Examine roughing-in of reinforcement and cast-in-place anchors to verify actual locations before installation.

C. Proceed with installation only after unsatisfactory conditions have been corrected.

3.2 APPLICATIONS

A. Hanger Rod Stiffeners:
Install hanger rod stiffeners where indicated or scheduled on Drawings to receive them and where required to prevent buckling of hanger rods due to seismic forces.

B. Strength of Support and Seismic Restraint Assemblies:
Where not indicated, select sizes of components so strength will be adequate to carry present and future static and seismic loads within specified loading limits.

3.3 VIBRATION-CONTROL AND SEISMIC-RESTRAINT DEVICE INSTALLATION

A. Equipment Restraints:

1. Install seismic snubbers on HVAC equipment mounted on vibration isolators. Locate snubbers as close as possible to vibration isolators and bolt to equipment base and supporting structure.

B. Piping Restraints: Comply with requirements in MSS SP-127.

C. Install cables so they do not bend across edges of adjacent equipment or building structure

D. Install bushing assemblies for anchor bolts for floor mounted equipment, arranged to provide resilient media between anchor bolt and mounting hole in concrete base.

E. Install bushing assemblies for mounting bolts for wall mounted equipment, arranged to provide resilient media where equipment or equipment-mounting channels are attached to wall.

F. Attachment to Structure:
If specific attachment is not indicated, anchor bracing to structure at flanges of beams, at upper truss chords of bar joists, or at concrete members.

G. Drilled-in Anchors:

1. Identify position of reinforcing steel and other embedded items prior to drilling holes for anchors. Do not damage existing reinforcing or embedded items during coring or drilling. Notify the structural engineer if reinforcing steel or other embedded items are encountered during drilling. Locate and avoid pre-stressed tendons, electrical and telecommunications conduit, and gas lines.

2. Wedge Anchors: Protect threads from damage during anchor installation. Heavy duty sleeve anchors shall be installed with sleeve fully engaged in the structural element to which anchor is to be fastened.

3. Adhesive Anchors: Clean holes to remove loose material and drilling dust prior to installation of adhesive. Place adhesive in holes proceeding from the bottom of the hole and progressing toward the surface in such a manner as to avoid introduction of air pockets in the adhesive.

4. Set anchors to manufacturer's recommended torque, using a torque wrench.

5. Install zinc-coated steel anchors for interior and stainless-steel anchors for exterior applications.

3.4 ACCOMMODATION OF DIFFERENTIAL SEISMIC MOTION

A. Install flexible connections in piping where they cross seismic joints, where adjacent sections or branches are supported by different structural elements, and where the connections terminate with connection to equipment that is anchored to a different structural element from the one supporting the connections as they approach equipment.

B. Perform tests and inspections.

C. Remove and replace malfunctioning units and retest as specified above.

D. Prepare test and inspection reports.

3.5 ADJUSTING

A. Adjust isolators after piping system is at operating weight.

B. Adjust limit stops on restrained spring isolators to mount equipment at normal operating height. After equipment installation is complete, adjust limit stops so they are out of contact during normal operation.

C. Adjust air-spring leveling mechanism.

D. Adjust active height of spring isolators.

E. Adjust restraints to permit free movement of equipment within normal mode of operation.

END OF SECTION

PART 1 - GENERAL

1.1 SUMMARY

A. Section Includes:

1. Equipment labels
2. Warning signs and labels
3. Pipe labels
4. Duct labels

1.2 ACTION SUBMITTAL

A. Product Data: For each type of product indicated.

PART 2 - PRODUCTS

2.1 EQUIPMENT LABELS

A. Plastic Labels for Equipment:

1. Material and Thickness:
Multilayer, multicolor, plastic labels for mechanical engraving, l/8 inch (3.2 mm) thick, and having predrilled holes for attachment hardware.

2. Letter Color: White

3. Background Color: Black

4. Maximum Temperature: Able to withstand temperatures up to 160°F (71°C).

5. Minimum Label Size: Length and width vary for required label content, but not less than 2-l/2 by 3/4 inch (64 by 19 mm).

6. Minimum Letter Size:

7. 1/4 inch (6.4 mm) for name of units if viewing distance is less than 24 inches (600 mm), l/2 inch (13 mm) for viewing distances up to 72 inches (1830 mm), and proportionately larger lettering for greater viewing distances. Include secondary lettering two-thirds to three-fourths the size of principal lettering.

8. Fasteners: Stainless-steel rivets

9. Adhesive: Contact type permanent adhesive, compatible with label and with substrate.

B. Label Content:
Include equipment's Drawing designation or unique equipment number, Drawing numbers where equipment is indicated (plans, details, and schedules), plus the Specification Section number and title where equipment is specified.

C. Equipment Label Schedule:
For each item of equipment to be labeled, on 8-1/2 by 11-inch (A4) bond paper. Tabulate equipment identification number and identify Drawing numbers where equipment is indicated (plans, details, and schedules), plus the Specification Section number and title where equipment is specified. Equipment schedule shall be included in operation and maintenance data.

2.2 WARNING SIGNS AND LABELS

A. Material and Thickness:
Multilayer, multicolor, plastic labels for mechanical engraving, l/8 inch (3.2 mm) thick, and having predrilled holes for attachment hardware.

B. Letter Color: White

C. Background Color: Red

D. Maximum Temperature: Able to withstand temperatures up to 160°F (71°C).

E. Minimum Label Size: Length and width vary for required label content, but not Jess than 2-1/2 by 3/4 inch (64 by 19 mm).

F. Minimum Letter Size:
1/4 inch (6.4 mm) for name of units if viewing distance is less than 24 inches (600 mm), 1/2 inch (13 mm) for viewing distances up to 72 inches (1830 mm), and proportionately larger lettering for greater viewing distances. Include secondary lettering two-thirds to three-fourths the size of principal lettering.

G. Fasteners: Stainless-steel rivets

H. Adhesive: Contact type permanent adhesive, compatible with label and with substrate

I. Label Content: Include caution and warning information, plus emergency notification instructions.

2.3 PIPE LABELS

A. General Requirements for Manufactured Pipe Labels: Preprinted, color coded, with lettering indicating service, and showing flow direction.

B. Pre-tensioned Pipe Labels:
Pre-coiled, semi-rigid plastic formed to partially cover circumference of pipe and to attach to pipe without fasteners or adhesive.

C. Self-Adhesive Pipe Labels: Printed plastic with contact type, permanent adhesive backing

D. Pipe Label Contents:
Include identification of piping service using same designations or abbreviations as used on Drawings, pipe size, and an arrow indicating flow direction.

1. Flow Direction Arrows:
Integral with piping system service lettering to accommodate both directions, or as separate unit on each pipe label to indicate flow direction.

2. Lettering Size: At least 1-1/2 inches (38 mm) high

2.4 DUCT LABELS

A. Material and Thickness:
Multilayer, multicolor, plastic labels for mechanical engraving, 1/16 inch (1.6 mm) thick, and having predrilled holes for attachment hardware.

B. Letter Color: White

C. C. Background Color: Black

D. Maximum Temperature: Able to withstand temperatures up to 160°F (71°C).

E. Minimum Label Size: Length and width vary for required label content, but not less than 2-1/2 by 3/4 inch (64 by 19 mm).

F. Minimum Letter Size:
l/4 inch (6.4 mm) for name of units if viewing distance is less than 24 inches (600 mm), 1/2 inch (13 mm) for viewing distances up to 72 inches (1830 mm), and proportionately larger lettering for greater viewing distances. Include secondary lettering two-thirds to three-fourths the size of principal lettering.

G. Adhesive: Contact type permanent adhesive, compatible with label and with substrate.

H. Duct Label Contents:
Include identification of duct service using same designations or abbreviations as used on Drawings, duct size, and an arrow indicating flow direction.

1. Flow Direction Arrows:
Integral with duct system service lettering to accommodate both directions, or as separate unit on each duct label to indicate flow direction.

2. Lettering Size: At least 1-1/2 inches (38 mm) high.

PART 3 - EXECUTION

3.1 PREPARATION

A. Clean piping and equipment surfaces of substances that could impair bond of identification devices, including dirt, oil, grease, release agents, and incompatible primers, paints, and encapsulates.

3.2 EQUIPMENT LABEL INSTALLATION

A. Install or permanently fasten labels on each major item of mechanical equipment.

B. Locate equipment labels where accessible and visible.

3.3 PIPE LABEL INSTALLATION

A. Piping Color Coding: Painting of piping is specified in division 9.

B. Locate pipe labels where piping is exposed or above accessible ceilings in finished spaces; machine rooms; accessible maintenance spaces such as shafts, tunnels, and plenums; and exterior exposed locations as follows:

1. Near each valve and control device.

2. Near each branch connection, excluding short takeoffs for fixtures and terminal units. Where flow pattern is not obvious, mark each pipe at branch.

3. Near penetrations through walls, floors, ceilings, and inaccessible enclosures.

4. At access doors, manholes, and similar access points that permit view of concealed piping.

5. Near major equipment items and other points of origination and termination.

6. Spaced at maximum intervals of 50 feet (15m) along each run. Reduce intervals to 25 feet (7.6 m) in areas of congested piping and equipment.

7. On piping above removable acoustical ceilings. Omit intermediately spaced labels.

C. Pipe Label Color Schedule:

1. Chilled Water Piping:

   a. Background Color: Blue

   b. Letter Color: White

2. Condenser Water Piping:

   a. Background Color: Green

   b. Letter Color: White

3. Hot Water Piping:

   a. Background Color: Red

   b. Letter Color: White

4. Refrigerant Piping:

   a. Background Color: Yellow

   b. Letter Color: Black

3.4 DUCT LABEL INSTALLATION

A. Install self-adhesive duct labels with permanent adhesive on air ducts in the following color codes:

1. Blue: For cold air supply ducts
2. Yellow: For hot-air supply ducts
3. Green: For exhaust, outside, relief, return, and mixed-air ducts
4. ASME A13.1 Colors and Designs: For hazardous material exhaust.

B. Locate labels near points where ducts enter into concealed spaces and at maximum intervals of 50 feet (15m) in each space where ducts are exposed or concealed by removable ceiling system.

END OF SECTION

PART 1 - GENERAL

1.1 SUMMARY

A. Section includes:

1. Balancing air systems:

a. Constant volume air systems.

1.2 DEFINITIONS

A. AABC - Associated Air Balance Council.

B. NEBB - National Environmental Balancing Bureau

C. TAB - Testing, Adjusting, and Balancing

D. TABB - Testing, Adjusting, and Balancing Bureau

E. TAB SPECIALIST - An entity engaged to perform tab work.

1.3 INFORMATIONAL SUBMITTALS

A. Strategies and procedures plan:
Within 60 days of contractor's notice to proceed, submit TAB strategies and step by step procedures as specified in "Preparation" article.

B. Certified TAB reports

1.4 QUALITY ASSURANCE

A. TAB contractor qualifications: Engage a TAB entity certified by AABC, NEBB or TABB.

1. TAB field supervisor: Employee of the tab contractor and Certified by AABC, NEBB or TABB.

2. Tab technician: Employee of the tab contractor and who is certified by AABC NEBB or TABB as a TAB technician.

B. Certify TAB field data reports and perform the following:

1. Review field data reports to validate accuracy of data and to prepare certified TAB reports.

2. Certify that the TAB team complied with the approved TAB plan and the procedures specified and referenced in this specification.

C. TAB report forms: Use standard TAB contractor's forms approved by commissioning authority.

D. Instrumentation type, quantity, accuracy, and calibration: As described in ASHRAE 111, section 5, "Instrumentation."

E. ASHRAE compliance: Applicable requirements in ASHRAE 62.1, section 7.2.2 "Air Balancing."

F. ASHRAE/IESNA compliance: Applicable requirements in ASHRAE/IESNA 90.1, Section 6.7.2.3- "System Balancing."

PART 2 - PRODUCTS (NOT APPLICABLE)

PART 3 - EXECUTION

3.1 EXAMINATION

A. Examine the contract documents to become familiar with project requirements and to discover conditions in systems' designs that may preclude proper TAB of systems and equipment.

B. Examine systems for installed balancing devices, such as test ports, gage cocks, thermometer wells, flow control devices, balancing valves and fittings, and manual volume dampers. Verify that locations of these balancing devices are accessible.

C. Examine the approved submittals for HVAC systems and equipment.

D. Examine design data including HVAC system descriptions, statements of design assumptions for environmental conditions and systems' output, and statements of philosophies and assumptions about HVAC system and equipment controls.

E. Examine ceiling plenums used for supply, return, or relief air to verify that they meet the leakage class of connected ducts as specified in Section 233113 "Metal Ducts" and are properly separated from adjacent areas. Verify that penetrations in plenum walls are sealed and fire-stopped if required.

F. Examine equipment performance data including fan and pump curves.

1. Relate performance data to project conditions and requirements, including system effects that can create undesired or unpredicted conditions that cause reduced capacities in all or part of a system.

2. Calculate system effect factors to reduce performance ratings of HVAC equipment when installed under conditions different from the conditions used to rate equipment performance. To calculate system effects for air systems, use Tables and charts found in AMCA 201, "Fans and Systems," or in SMACNA's "HVAC Systems Duct Design." compare results with the design data and installed conditions.

G. Examine system and equipment installations and verify that field quality-control testing, cleaning, and adjusting specified in individual sections have been performed.

H. Examine test reports specified in individual system and equipment sections.

I. Examine HVAC equipment and filters and verify that bearings are greased, belts are aligned and tight, and equipment with functioning controls is ready for operation.

J. Examine terminal units, such as variable air volume boxes, and verify that they are accessible, and their controls are connected and functioning.

K. Examine strainers. Verify that startup screens are replaced by permanent screens with indicated perforations.

L. Examine three-way valves for proper installation for their intended function of diverting or mixing fluid flows.

M. Examine heat-transfer coils for correct piping connections and for clean and straight fins.

N. Examine system pumps to ensure absence of entrained air in the suction piping.

O. Examine operating safety interlocks and controls on HVAC equipment.

P. Report deficiencies discovered before and during performance of TAB procedures. Observe and record system reactions to changes in conditions. Record default set points if different from indicated values.

3.2 PREPARATION

A. Prepare a TAB plan that includes strategies and step by step procedures.

B. Complete system-readiness checks and prepare reports. Verify the following:

1. Permanent electrical-power wiring is complete.

2. Automatic temperature-control systems are operational.

3. Equipment and duct access doors are securely closed.

4. Balance, smoke, and fire dampers are open.

5. Isolating and balancing valves are open and control valves are operational.

6. Ceilings are installed in critical areas where air pattern adjustments are required and access to balancing devices is provided.

7. Windows and doors can be closed so indicated conditions for system operations can be met.

3.3 GENERAL PROCEDURES FOR TESTING AND BALANCING

A. Perform testing and balancing procedures on each system according to the procedures contained in AABC's "National Standards for Total System Balance" ASHRAE 111 NEBB's "Procedural Standards for Testing, Adjusting, and Balancing of Environmental Systems" SMACNA's "HVAC Systems - Testing, Adjusting, and Balancing" and in this section.

1. Comply with requirements in ASHRAE 62.1, section 7.2.2 "Air Balancing."

B. Cut insulation, ducts, pipes, and equipment cabinets for installation of test probes to the minimum extent necessary for TAB procedures.

1. After testing and balancing, patch probe holes in ducts with same material and thickness as used to construct ducts.

2. Install and join new insulation that matches removed materials. Restore insulation, coverings, vapor barrier, and finish according to Section 230713 "Duct Insulation," and section 230719 "HVAC piping insulation."

C. Mark equipment and balancing devices, including damper-control positions, valve position indicators, fan-speed-control levers, and similar controls and devices, with paint or other suitable, permanent identification material to show final settings.

D. Take and report testing and balancing measurements in inch-pound (ip) units.

3.4 GENERAL PROCEDURES FOR BALANCING AIR SYSTEMS

A. Prepare test reports for both fans and outlets. Obtain manufacturer's outlet factors and recommended testing procedures. Crosscheck the summation of required outlet volumes with required fan volumes.

B. Prepare schematic diagrams of systems' "as-built" duct layouts.

C. Determine the best locations in main and branch ducts for accurate duct airflow measurements.

D. Check airflow patterns from the outdoor air louvers and dampers and the return and exhaust air dampers through the supply fan discharge and mixing dampers.

E. Locate start-stop and disconnect switches, electrical interlocks, and motor starters.

F. Verify that motor starters are equipped with properly sized thermal protection.

G. Check dampers for proper position to achieve desired airflow path.

H. Check for airflow blockages

I. Check condensate drains for proper connections and functioning.

J. Check for proper sealing of air handling unit components.

K. Verify that air duct system is sealed as specified in Section 233113 "Metal Ducts."

3.5 PROCEDURES FOR CONSTANT VOLUME AIR SYSTEMS

A. Adjust fans to deliver total indicated airflows within the maximum allowable fan speed listed by fan manufacturer.

1. Measure total airflow.

a. Where enough space in ducts is unavailable for Pitot tube traverse measurements, measure airflow at terminal outlets and inlets and calculate the total airflow.

2. Measure fan static pressures as follows to determine actual static pressure:

   a. Measure outlet static pressure as far downstream from the fan as practical and upstream from restrictions in ducts such as elbows and transitions.

   b. Measure static pressure directly at the fan outlet or through the flexible connection.

   c. Measure inlet static pressure of single inlet fans in the inlet duct as near the fan as possible, upstream from the flexible connection, and downstream from duct restrictions.

   d. Measure inlet static pressure of double inlet fans through the wall of the plenum that houses the fan.

3. Measure static pressure across each component that makes up an air-handling unit, rooftop unit, and other air-handling and treating equipment.

   a. Report the cleanliness status of filters and the time static pressures are measured.

4. Measure static pressures entering and leaving other devices, such as sound traps, heat recovery equipment, and air washers, under final balanced conditions.

5. Review record documents to determine variations in design static pressures versus actual static pressures. Calculate actual system effect factors. Recommend adjustments to accommodate actual conditions.

6. Obtain approval from commissioning authority for adjustment of fan speed higher or lower than indicated speed. Comply with requirements in sections for air handling units for adjustment of fans, belts, and pulley sizes to achieve indicated air handling unit performance.

7. Do not make fan speed adjustments that result in motor overload. Consult equipment manufacturers about fan speed safety factors. Modulate dampers and measure fan-motor amperage to ensure that no overload will occur. Measure amperage in full-cooling, full-heating, economizer, and any other operating mode to determine the maximum required brake horsepower.

B. Adjust volume dampers for main duct, submain ducts, and major branch ducts to indicated airflows within specified tolerances.

1. Measure airflow of submain and branch ducts.

   a. Where enough space in submain and branch ducts is unavailable for Pitot tube traverse measurements, measure airflow at terminal outlets and inlets and calculate the total airflow for that zone.

2. Measure static pressure at a point downstream from the balancing damper, and adjust volume dampers until the proper static pressure is achieved.

3. Re-measure each submain and branch duct after all have been adjusted. Continue to adjust submain and branch ducts to indicated airflows within specified tolerances.

C. Measure air outlets and inlets without making adjustments.

1. Measure terminal outlets using a direct reading hood or outlet manufacturer's written instructions and calculating factors.

D. Adjust air outlets and inlets for each space to indicated airflows within specified tolerances of indicated valves. Adjust using branch volume dampers rather than extractors and the dampers at air terminals.

1. Adjust each outlet in same room or space to within specified tolerances of indicated quantities without generating noise levels above the limitations prescribed by the contract documents.

2. Adjust patterns of adjustable outlets for proper distribution without drafts.

3.6 PROCEDURES FOR MOTORS

A. Motors, 1/2 hp and larger: Test at final balanced conditions and record the following data:

1. Manufacturer's name, model number, and serial number

2. Motor horsepower rating

3. Motor rpm

4. Efficiency rating

5. Nameplate and measured voltage, each phase

6. Nameplate and measured amperage, each phase

7. Starter thermal-protection-element rating

B. Motors driven by variable-frequency controllers: test for proper operation at speeds varying from minimum to maximum. Test the manual bypass of the controller to prove proper operation. Record observations including name of controller manufacturer, model number, serial number, and nameplate data.

3.7 PROCEDURES FOR CONDENSING UNITS

A. Verify proper rotation of fans.

B. Measure entering- and leaving-air temperatures.

C. Record compressor data.

3.8 PROCEDURES FOR HEAT-TRANSFER COILS

A. Measure, adjust, and record the following data for each refrigerant coil:

1. Dry-bulb temperature of entering and leaving air

2. Wet-bulb temperature of entering and leaving air

3. Airflow

4. Air pressure drop

5. Refrigerant suction pressure and temperature

3.9 TOLERANCES

A. Set HVAC system's air flow rates and water flow rates within the following tolerances:

1. Supply, return, and exhaust fans and equipment with fans: Plus or minus 10 percent

2. Air outlets and inlets: Plus or minus 10 percent.

3.10 REPORTING

A. Initial construction phase report:
Based on examination of the contract documents as specified in "examination" article, prepare a report on the adequacy of design for systems' balancing devices. Recommend changes and additions to systems' balancing devices to facilitate proper performance measuring and balancing. Recommend changes and additions to HVAC systems and general construction to allow access for performance measuring and balancing devices.

B. Status reports:
Prepare biweekly progress reports to describe completed procedures, procedures in progress, and scheduled procedures. Include a list of deficiencies and problems found in systems being tested and balanced. Prepare a separate report for each system and each building floor for systems serving multiple floors.

3.11 FINAL REPORT

A. General:
Prepare a certified written report; tabulate and divide the report into separate sections for tested systems and balanced systems.

1. Include a certification sheet at the front of the report's Binder, signed and sealed by the certified testing and balancing engineer.

2. Include a list of instruments used for procedures, along with Proof of calibration.

B. Final report contents:
In addition to certified field report data, include the following:

1. Fan curves

2. Manufacturers' test data

3. Field test reports prepared by system and equipment installers

4. Other information relative to equipment performance; do not include shop drawings and product data.

C. General report data:
In addition to form titles and entries, include the following data:

1. Title page

2. Name and address of the tab contractor

3. Project name

4. Project location

5. Owner's representative's name and address

6. Engineer's name and address

7. Contractor's name and address

8. Report date

9. Signature of TAB supervisor who certifies the report

10. Table of contents with the total number of pages defined for each section of the report. Number each page in the report.

11. Summary of contents including the following:

    a. Indicated versus final performance

    b. Notable characteristics of systems

    c. Description of system operation sequence if it varies from the contract documents.

12. Nomenclature sheets for each item of equipment

13. Data for terminal units, including manufacturer's name, type, size, and fittings

14. Notes to explain why certain final data in the body of reports vary from indicated valves

15. Test conditions for fans and pump performance forms including the following:

    a. Settings for outdoor, return, and exhaust air dampers

    b. Conditions of filters

    c. Cooling coil, wet- and dry-bulb conditions

    d. Fan drive settings including settings and percentage of maximum pitch diameter

    e. Other system operating conditions that affect performance.

3.12 ADDITIONAL TESTS

A. Within 90 days of completing tab, perform additional tab to verify that balanced conditions are being maintained throughout and to correct unusual conditions.

END OF SECTION

PART 1 - GENERAL

1.1 SUMMARY

A. Section includes insulating the following duct services:

1. Indoor, concealed supply air.

B. Related Sections:

1. Section 233113 "Metal Ducts".

1.2 ACTION SUBMITTALS

A. Product Data: For each type of product indicated.

B. Shop Drawings: Include plans, elevations, sections, details, and attachments to other work.

1. Detail application of protective shields, saddles, and inserts at hangers for each type of insulation and hanger.

2. Detail insulation application at elbows, fittings, dampers, specialties and flanges for each type of insulation.

3. Detail application of field-applied jackets.

4. Detail application at linkages of control devices

1.3 INFORMATIONAL SUBMITTALS

A. Field quality control reports.

1.4 QUALITY ASSURANCE

A. Surface Burning Characteristics:
For insulation and related materials, as determined by testing identical products according to ASTM E 84, by a testing agency acceptable to authorities having jurisdiction. Factory label insulation and jacket materials and adhesive, mastic, tapes, and cement material containers, with appropriate markings of applicable testing agency.

1. Insulation Installed Indoors: Flame spread index of 25 or less, and smoke developed index of 50 or less.

PART 2 - PRODUCTS

2.1 INSULATION MATERIALS

A. Comply with requirements in "Duct Insulation Schedule, General," and "Indoor Duct and Plenum Insulation Schedule" articles for where insulating materials shall be applied.

B. Products shall not contain asbestos, lead, mercury, or mercury compounds.

C. Products that come in contact with stainless steel shall have a leachable chloride content of less than 50 ppm when tested according to ASTM C 871.

D. Insulation materials for use on austenitic stainless steel shall be qualified as acceptable according to ASTM C 795.

E. Foam insulation materials shall not use CFC or HCFC blowing agents in the manufacturing process.

F. Mineral Fiber Blanket Insulation:
Mineral or glass fibers bonded with a thermosetting resin. Comply with ASTM C 553, Type II and ASTM C 1290, Type III with factory applied FSK jacket. Factory applied jacket requirements are specified in "Factory Applied Jackets" Article.

1. Products:
Subject to compliance with requirements, provide one of the following available products that may be incorporated into the Work include, but are not limited to, the following:

a. CertainTeed Corp.; SoftTouch Duct Wrap.

b. Johns Manville; Microlite

c. Knauf Insulation; Friendly Feel Duct Wrap

d. Manson Insulation Inc.; Alley Wrap

e. Owens Coming; SOFTR All-Service Duct Wrap

2.2 ADHESIVES

A. Materials shall be compatible with insulation materials, jackets, and substrates and for bonding insulation to itself and to surfaces to be insulated unless otherwise indicated.

B. Mineral Fiber Adhesive: Comply with Mil-A-3316C, Class 2, Grade A

1. Products: Subject to compliance with requirements, provide one of the following available products that may be incorporated into the Work include, but are not limited to, the following:

a. Childers Brand, Specialty Construction Brands, Inc., a business of H. B. Fuller Company; CP-127

b. Eagle Bridges - Marathon Industries; 225

c. Foster Brand, Specialty Construction Brands, Inc., a business of H. B. Fuller Company; 85-60/85-70

d. Mon-Eco Industries, Inc.; 22-25

2. For indoor applications, adhesive shall have a VOC content of 80 g/L or less when calculated according to 40 CFR 59, Subpart D (EPA Method 24).

3. Adhesive shall comply with the testing and product requirements of the California Department of Health Services' "Standard Practice for the Testing of Volatile Organic Emissions from Various Sources Using Small Scale Environmental Chambers."

C. ASJ Adhesive, and FSK Jacket Adhesive: Comply with Mil-A-3316C, Class 2, Grade A for bonding insulation jacket lap seams and joints.

1. Products:
Subject to compliance with requirements, provide one of the following available products that may be incorporated into the Work include, but are not limited to, the following:

a. Childers Brand, Specialty Construction Brands, Inc., a business of H. B. Fuller Company; CP-82

b. Eagle Bridges - Marathon Industries; 225

c. Foster Brand, Specialty Construction Brands, Inc., a business of H. B. Fuller Company; 85-50

d. Mon-Eco Industries, Inc.; 22-25.

2. For indoor applications, adhesive shall have a VOC content of 50 g/L or less when calculated according to 40 CFR 59, Subpart D (EPA Method 24).

3. Adhesive shall comply with the testing and product requirements of the California Department of Health Services' "Standard Practice for the Testing of Volatile Organic Emissions from Various Sources Using Small Scale Environmental Chambers."

2.3 MASTICS

A. Materials shall be compatible with insulation materials, jackets, and substrates; comply with MIL-PRF-19565C, Type II.

1. For indoor applications, use mastics that have a VOC content of 50 g/L or less when calculated according to 40 CFR 59, Subpart D (EPA Method 24).

B. Vapor Barrier Mastic: Water based; suitable for indoor use on below ambient services

1. Products:
Subject to compliance with requirements, provide one of the following available products that may be incorporated into the Work include, but are not limited to, the following:

a. Foster Brand, Specialty Construction Brands, Inc., a business of H. B. Fuller Company; 30-80/30-90

b. Vimasco Corporation; 749

2. Water Vapor Permeance:
ASTM E 96/E 96M, Procedure B, 0.013 perm (0.009 metric perm) at 43 mil (1.09 mm) dry film thickness.

3. Service Temperature Range: To plus 180°F (to plus 82°C).

4. Solids Content: ASTM D 1644, 58 percent by volume and 70 percent by weight

5. Color: White.

C. Breather Mastic: Water based; suitable for indoor and outdoor use on above ambient services.

1. Products:
Subject to compliance with requirements, provide one of the following available products that may be incorporated into the Work include, but are not limited to, the following:

a. Childers Brand, Specialty Construction Brands, Inc., a business of H. B. Fuller Company; CP-10

b. Eagle Bridges - Marathon Industries; 550

c. Foster Brand, Specialty Construction Brands, Inc., a business of H. B. Fuller Company; 46-50

d. Mon-Eco Industries, Inc.; 55-50

e. Vimasco Corporation; WC-l/WC-5

2. Water Vapor Permeance: ASTM F 1249, 1.8 perms (1.2 metric perms) at 0.0625-inch (1.6-mm) dry film thickness.

3. Service Temperature Range: To plus 180°F (to plus 82°C)

4. Solids Content: 60 percent by volume and 66 percent by weight

5. Color: White.

2.4 SEALANTS

A. FSK and Metal Jacket Flashing Sealants:

1. Products:
Subject to compliance with requirements, provide one of the following available products that may be incorporated into the Work include, but are not limited to, the following:

a. Childers Brand, Specialty Construction Brands, Inc., a business of H. B. Fuller Company; CP-76

b. Eagle Bridges- Marathon Industries; 405

c. Foster Brand, Specialty Construction Brands, Inc., a business of H. B. Fuller Company; 95-44

d. Mon-Eco Industries, Inc.; 44-05

2. Materials shall be compatible with insulation materials, jackets, and substrates.

3. Fire and water resistant, flexible, elastomeric sealant

4. Service Temperature Range: To plus 250°F (to plus 121°C)

5. Color: Aluminum

6. For indoor applications, use sealants that have a VOC content of 420 g/L or less when calculated according to 40 CFR 59, Subpart D (EPA Method 24).

7. Sealants shall comply with the testing and product requirements of the California Department of Health Services' "Standard Practice for the Testing of Volatile Organic Emissions from Various Sources Using Small Scale Environmental Chambers."

B. ASJ Flashing Sealants, and Vinyl and PVC Jacket Flashing Sealants:

1. Products:
Subject to compliance with requirements, provide one of the following available products that may be incorporated into the Work include, but are not limited to, the following:

a. Childers Brand, Specialty Construction Brands, Inc., a business of H. B. Fuller Company; CP-76

2. Materials shall be compatible with insulation materials, jackets, and substrates.

3. Fire and water resistant, flexible, elastomeric sealant

4. Service Temperature Range: To plus 250°F (to plus 121°C)

5. Color: White

6. For indoor applications, sealants shall have a VOC content of 420 g/L or less when calculated according to 40 CFR 59, Subpart D (EPA Method 24)

7. Sealants shall comply with the testing and product requirements of the California Department of Health Services' "Standard Practice for the Testing of Volatile Organic Emissions from Various Sources Using Small Scale Environmental Chambers."

2.5 FACTORY APPLIED JACKETS

A. Insulation system schedules indicate factory applied jackets on various applications. When factory applied jackets are indicated, comply with the following:

1. ASJ: White, kraft paper, fiberglass reinforced scrim with aluminum foil backing; complying with ASTM C 1136, Type I.

2. ASJ-SSL: ASJ with self-sealing, pressure sensitive, acrylic based adhesive covered by a removable protective strip; complying with ASTM C 1136, Type I.

3. FSK Jacket: Aluminum foil, fiberglass reinforced scrim with kraft paper backing; complying with ASTM C 1136, Type II.

4. FSP Jacket: Aluminum foil, fiberglass reinforced scrim with polyethylene backing; complying with ASTM C 1136, Type II.

5. Vinyl Jacket: White vinyl with a permeance of 1.3 perms (0.86 metric perm) when tested according to ASTM E 96/E 96M, Procedure A, and complying with NFPA 90A and NFPA90B.

2.6 FIELD APPLIED FABRIC REINFORCING MESH

A. Woven Polyester Fabric:
Approximately 1 oz./sq. yd. (34 g/sq. m) with a thread count of 10 strands by 10 strands/sq. in. (4 strands by 4 strands/sq. mm), in a Leno weave, for ducts.

1. Products:
Subject to compliance with requirements, provide one of the following available products that may be incorporated into the Work include, but are not limited to, the following:

a. Foster Brand, Specialty Construction Brands, Inc., a business of H. B. Fuller Company; Mast-A-Fab

b. Vimasco Corporation; Elastafab 894

2.7 TAPES

A. ASJ Tape: White vapor retarder tape matching factory applied jacket with acrylic adhesive, complying with ASTM C 1136.

1. Products:
Subject to compliance with requirements, provide one of the following available products that may be incorporated into the Work include, but are not limited to, the following:

a. ABI, Ideal Tape Division; 428 AWF ASJ

b. Avery Dennison Corporation, Specialty Tapes Division; Passon 0836.

c. Compac Corporation; 104 and 105

d. Venture Tape; 1540 CW Plus, 1542 CW Plus, and 1542 CW Plus/SQ

2. Width: 3 inches (75 mm)

3. Thickness: 11.5 mils (0.29 mm)

4. Adhesion: 90 ounces force/inch (1.0 N/mm) in width

5. Elongation: 2 percent

6. Tensile Strength: 40 lbf/inch (7.2 N/mm) in width

7. ASJ Tape Disks and Squares: Precut disks or squares of ASJ tape

B. FSK Tape:

Foil face, vapor-retarder tape matching factory applied jacket with acrylic adhesive; complying with ASTM C 1136.

1. Products:
Subject to compliance with requirements, provide one of the following available products that may be incorporated into the Work include, but are not limited to, the following:

a. ABI, Ideal Tape Division; 491 AWF FSK

b. Avery Dennison Corporation, Specialty Tapes Division; Fasson 0827

c. Compac Corporation; 110 and 111

d. Venture Tape; 1525 CW NT, 1528 CW, and 1528 CW/SQ

2. Width: 3 inches (75 mm)

3. Thickness: 6.5 mils (0.16 mm)

4. Adhesion: 90 ounces force/inch (1.0 N/mm) in width

5. Elongation: 2 percent

6. Tensile Strength: 40 lbf/inch (7.2 N/mm) in width

7. FSK Tape Disks and Squares: Precut disks or squares of FSK tape

C. PVC Tape:
White vapor-retarder tape matching field-applied PVC jacket with acrylic adhesive; suitable for indoor and outdoor applications.

1. Products:
Subject to compliance with requirements, provide one of the following available products that may be incorporated into the Work include, but are not limited to, the following:

a. ABI, Ideal Tape Division; 370 White PVC tape

b. Compac Corporation; 130

c. Venture Tape; 1506 CW NS

2. Width: 2 inches (50 mm)

3. Thickness: 6 mils (0.15 mm)

4. Adhesion: 64 ounces force/inch (0.7 N/mm) in width

5. Elongation: 500 percent

6. Tensile Strength: 18 lbf/inch (3.3 N/mm) in width.

D. Aluminum-Foil Tape: Vapor retarder tape with acrylic adhesive

1. Products:
Subject to compliance with requirements, provide one of the following available products that may be incorporated into the Work include, but are not limited to, the following:

a. ABI, Ideal Tape Division; 488 AWF

b. Avery Dennison Corporation, Specialty Tapes Division; Fasson 0800.

c. Compac Corporation; 120

d. Venture Tape; 3520 CW

2. Width: 2 inches (50 mm)

3. Thickness: 3.7 mils (0.093 mm)

4. Adhesion: 100 ounces force/inch (1 .1 N/mm) in width

5. Elongation: 5 percent

6. Tensile Strength: 34 lbf/inch (6.2 N/mm) in width

2.8 SECUREMENTS

A. Aluminum Bands:
ASTM B 209 (ASTM B 209M), Alloy 3003, 3005, 3105, or 5005; Temper H-14, 0.020 inch (0.51 mm) thick, 1/2 inch (13 mm) wide with wing seal or closed seal.

1. Products:
Subject to compliance with requirements, provide one of the following available products that may be incorporated into the Work include, but are not limited to, the following:

a. ITW Insulation Systems; Gerrard Strapping and Seals

b. RPR Products, Inc.; lnsul-Mate Strapping, Seals, and Springs

B. Insulation Pins and Hangers:

1. Metal, Adhesively Attached, Perforated Base Insulation Hangers:
Baseplate welded to projecting spindle that is capable of holding insulation, of thickness indicated, and securely in position indicated when self-locking washer is in place. Comply with the following requirements:

a. Products:
Subject to compliance with requirements, provide one of the following available products that may be incorporated into the Work include, but are not limited to, the following:

i. AGM Industries, Inc.; Tactoo Perforated Base Insul-Hangers

ii. GEMCO; Perforated Base

iii. 3) Midwest Fasteners, Inc.; Spindle

b. Baseplate: Perforated, galvanized carbon steel sheet, 0.030 inch (0.76 mm) thick by 2 inches (50 mm) square.

c. Spindle: Stainless steel, fully annealed, 0.106-inch (2.6 mm) diameter shank, length to suit depth of insulation indicated.

d. Adhesive:
Recommended by hanger manufacturer. Product with demonstrated capability to bond insulation hanger securely to substrates indicated without damaging insulation, hangers, and substrates.

2. Nonmetal, Adhesively Attached, Perforated Base Insulation Hangers:
Baseplate fastened to projecting spindle that is capable of holding insulation, of thickness indicated, and securely in position indicated when self-locking washer is in place. Comply with the following requirements:

a. Products:
Subject to compliance with requirements, provide one of the following available products that may be incorporated into the Work include, but are not limited to, the following:

i. GEMCO; Nylon Hangers

ii. 2) Midwest Fasteners, Inc.; Nylon Insulation Hangers

b. Baseplate: Perforated, nylon sheet, 0.030 inch (0.76 mm) thick by 1-1/2 inches (38 mm) in diameter

c. Spindle: Nylon, 0.106-inch (2.6 mm) diameter shank, length to suit depth of insulation indicated, up to 2-1/2 inches (63 mm).

d. Adhesive:
Recommended by hanger manufacturer. Product with demonstrated capability to bond insulation hanger securely to substrates indicated without damaging insulation, hangers, and substrates.

3. Self-Sticking-Base Insulation Hangers:
Baseplate welded to projecting spindle that is capable of holding insulation, of thickness indicated, and securely in position indicated when self-locking washer is in place. Comply with the following requirements:

a. Products:
Subject to compliance with requirements, provide one of the following available products that may be incorporated into the Work include, but are not limited to, the following:

i. AGM Industries, Inc.; Tactoo Self-Adhering Insul-Hangers

ii. GEMCO; Peel & Press

iii. 3) Midwest Fasteners, Inc.; Self Stick

b. Baseplate: Galvanized carbon steel sheet, 0.030-inch (0.76 mm) thick by 2 inches (50 mm) square

c. Spindle: Stainless steel, fully annealed, 0.106-inch (2.6 mm) diameter shank, length to suit depth of insulation indicated.

d. Adhesive backed base with a peel off protective cover

4. Insulation Retaining Washers:
Self-locking washers formed from 0.016 inch (0.41 mm) thick, stainless steel sheet, with beveled edge sized as required to hold insulation securely in place but not less than 1-1/2 inches (38 mm) in diameter.

a. Products:
Subject to compliance with requirements, provide one of the following available products that may be incorporated into the Work include, but are not limited to, the following:

i. AGM Industries, Inc.; RC-150

ii. GEMCO; R-150

iii. Midwest Fasteners, Inc.; WA-150

iv. Nelson Stud Welding; Speed Clips

b. Protect ends with capped self-locking washers incorporating a spring steel insert to ensure permanent retention of cap in exposed locations.

5. Nonmetal Insulation Retaining Washers:
Self-locking washers formed from 0.016 inch (0.41 mm) thick nylon sheet, with beveled edge sized as required to hold insulation securely in place but not less than 1-1/2 inches (38 mm) in diameter.

a. Manufacturers:
Subject to compliance with requirements, provide products by one of the following available manufacturers offering products that may be incorporated into the Work include, but are not limited to, the following:

i. GEMCO

ii. 2) Midwest Fasteners, Inc

C. Staples: Outward clinching insulation staples, nominal ¾ inch (19 mm) wide, stainless steel or Monel.

D. Wire: 0.062 inch (1.6 mm) soft annealed, galvanized steel

1. Manufacturers:
Subject to compliance with requirements, provide products by one of the following available manufacturers offering products that may be incorporated into the Work include, but are not limited to, the following:

a. C &F Wire.

2.9 CORNER ANGLES

A. PVC Corner Angles:
30 mils (0.8 mm) thick, minimum 1 by 1 inch (25 by 25 mm), PVC according to ASTM D 1784, Class 16354-C. White or color-coded to match adjacent surface.

B. Aluminum Corner Angles:
0.040 inch (1.0 mm) thick, minimum 1 by 1 inch (25 by 25 mm), aluminum according to ASTM B 209 (ASTM B 209M), Alloy 3003, 3005, 3105, or 5005; Temper H-14.

PART 3 - EXECUTION

3.1 PREPARATION

A. Surface Preparation:
Clean and dry surfaces to receive insulation. Remove materials that will adversely affect insulation application.

3.2 GENERAL INSTALLATION REQUIREMENTS

A. Install insulation materials, accessories, and finishes with smooth, straight, and even surfaces; free of voids throughout the length of ducts and fittings.

B. Install insulation materials, vapor barriers or retarders, jackets, and thicknesses required for each item of duct system as specified in insulation system schedules.

C. Install accessories compatible with insulation materials and suitable for the service. Install accessories that do not corrode, soften, or otherwise attack insulation or jacket in either wet or dry state.

D. Install insulation with longitudinal seams at top and bottom of horizontal runs.

E. Install multiple layers of insulation with longitudinal and end seams staggered.

F. Keep insulation materials dry during application and finishing.

G. Install insulation with tight longitudinal seams and end joints. Bond seams and joints with adhesive recommended by insulation material manufacturer.

H. Install insulation with least number of joints practical.

I. Where vapor barrier is indicated, seal joints, seams, and penetrations in insulation at hangers, supports, anchors, and other projections with vapor-barrier mastic.

1. Install insulation continuously through hangers and around anchor attachments.

2. For insulation application where vapor barriers are indicated, extend insulation on anchor legs from point of attachment to supported item to point of attachment to structure. Taper and seal ends at attachment to structure with vapor barrier mastic.

3. Install insert materials and install insulation to tightly join the insert. Seal insulation to insulation inserts with adhesive or sealing compound recommended by insulation material manufacturer.

J. Apply adhesives, mastics, and sealants at manufacturer's recommended coverage rate and wet and dry film thicknesses.

K. Install insulation with factory-applied jackets as follows:

1. Draw jacket tight and smooth.

2. Cover circumferential joints with 3 inch (75 mm) wide strips, of same material as insulation jacket. Secure strips with adhesive and outward clinching staples along both edges of strip, spaced 4 inches (100 mm) O.C.

3. Overlap jacket longitudinal seams at least 1-1/2 inches (38 mm). Clean and dry surface to receive self-sealing lap. Staple laps with outward clinching staples along edge at 2 inches (50 mm) O.C.

4. For below ambient services, apply vapor-barrier mastic over staples.

5. Cover joints and seams with tape, according to insulation material manufacturer's written instructions, to maintain vapor seal.

6. Where vapor barriers are indicated, apply vapor-barrier mastic on seams and joints and at ends adjacent to duct flanges and fittings.

L. Cut insulation in a manner to avoid compressing insulation more than 75 percent of its nominal thickness.

M. Finish installation with systems at operating conditions. Repair joint separations and cracking due to thermal movement.

N. Repair damaged insulation facings by applying same facing material over damaged areas. Extend patches at least 4 inches (100 mm) beyond damaged areas. Adhere, staple, and seal patches like butt joints.

3.3 PENETRATIONS

A. Insulation Installation at above ground Exterior Wall Penetrations: Continuously through wall penetrations.

1. Seal penetrations with flashing sealant. Install insulation.

2. For applications requiring only indoor insulation, terminate insulation inside wall surface and seal with joint sealant. For applications requiring indoor and outdoor insulation, install insulation for outdoor applications tightly joined to indoor insulation ends. Seal joint with joint sealant.

3. Extend jacket of outdoor insulation outside wall flashing and overlap wall flashing at least 2 inches (50 mm).

4. Seal jacket to wall flashing with flashing sealant.

B. Insulation Installation at Interior Wall and Partition Penetrations (That Are Not Fire Rated): Install insulation continuously through walls and partitions.

C. Insulation Installation at Fire Rated Wall and Partition Penetrations:
Terminate insulation at fire damper sleeves for fire-rated wall and partition penetrations. Externally insulate damper sleeves to match adjacent insulation and overlap duct insulation at least 2 inches (50 mm).

1. Comply with requirements in Division 07 for fire stopping and fire resistive joint sealers.

3.4 INSTALLATION OF MINERAL FIBER INSULATION

A. Blanket Insulation Installation on Ducts and Plenums: Secure with adhesive and insulation pins.

1. Apply adhesives according to manufacturer's recommended coverage rates per unit area, for 100 percent coverage of duct and plenum surfaces.

2. Apply adhesive to entire circumference of ducts and to all surfaces of fittings and transitions.

3. Install either capacitor discharge weld pins and speed washers or cupped head, capacitor discharge weld pins on sides and bottom of horizontal ducts and sides of vertical ducts as follows:

a. On duct sides with dimensions 18 inches (450 mm) and smaller, place pins along longitudinal centerline of duct. Space 3 inches (75 mm) maximum from insulation end joints, and 16 inches (400 mm) O.C.

b. On duct sides with dimensions larger than 18 inches (450 mm), place pins 16 inches (400 mm) O.C. each way, and 3 inches (75 mm) maximum from insulation joints. Install additional pins to hold insulation tightly against surface at cross bracing.

c. Pins may be omitted from top surface of horizontal, rectangular ducts and plenums.

d. Do not over compress insulation during installation.

e. Impale insulation over pins and attach speed washers.

f. Cut excess portion of pins extending beyond speed washers or bend parallel with insulation surface. Cover exposed pins and washers with tape matching insulation facing.

1. For ducts and plenums with surface temperatures below ambient, install a continuous unbroken vapor barrier. Create a facing lap for longitudinal seams and end joints with insulation by removing 2 inches (50 mm) from one edge and one end of insulation segment. Secure laps to adjacent insulation section with 1/2-inch (13 mm) outward clinching staples, 1-inch (25 mm) O.C. Install vapor barrier consisting of factory or field applied jacket, adhesive, vapor barrier mastic, and sealant at joints, seams, and protrusions.

a. Repair punctures, tears, and penetrations with tape or mastic to maintain vapor barrier seal.

b. Install vapor stops for ductwork and plenums operating below 50°F (10°C) at 18-foot (5.5 m) intervals. Vapor stops shall consist of vapor barrier mastic applied in a Z-shaped pattern over insulation face, along butt end of insulation, and over the surface. Cover insulation face and surface to be insulated a width equal to two times the insulation thickness, but not less than 3 inches (75 mm).

2. Overlap un-faced blankets a minimum of 2 inches (50 mm) on longitudinal seams and end joints. At end joints, secure with steel bands spaced a maximum of 18 inches (450 mm) O.C.

3. Install insulation on rectangular duct elbows and transitions with a full insulation section for each surface. Install insulation on round and flat oval duct elbows with individually mitered gores cut to fit the elbow.

4. Insulate duct stiffeners, hangers, and flanges that protrude beyond insulation surface with 6 inch (150 mm) wide strips of same material used to insulate duct. Secure on alternating sides of stiffener, hanger, and flange with pins spaced 6 inches (150 mm) O.C.

B. Board Insulation Installation on Ducts and Plenums: Secure with adhesive and insulation pins.

1. Apply adhesives according to manufacturer's recommended coverage rates per unit area, for 100 percent coverage of duct and plenum surfaces.

2. Apply adhesive to entire circumference of ducts and to all surfaces of fittings and transitions.

3. Install either capacitor-discharge-weld pins and speed washers or cupped-head, capacitor discharge weld pins on sides and bottom of horizontal ducts and sides of vertical ducts as follows:

a. On duct sides with dimensions 18 inches (450 mm) and smaller, place pins along longitudinal centerline of duct. Space 3 inches (75 mm) maximum from insulation end joints, and 16 inches (400 mm) O.C.

b. On duct sides with dimensions larger than 18 inches (450 mm), space pins 16 inches (400 mm) O.C. each way, and 3 inches (75 mm) maximum from insulation joints. Install additional pins to hold insulation tightly against surface at cross bracing.

c. Pins may be omitted from top surface of horizontal, rectangular ducts and plenums.

d. Do not over compress insulation during installation.

e. Cut excess portion of pins extending beyond speed washers or bend parallel with insulation surface. Cover exposed pins and washers with tape matching insulation facing.

4. For ducts and plenums with surface temperatures below ambient, install a continuous unbroken vapor barrier. Create a facing lap for longitudinal seams and end joints with insulation by removing 2 inches (50 mm) from one edge and one end of insulation segment. Secure laps to adjacent insulation section with 1/2-inch (13-mm) outward clinching staples, 1-inch (25 mm) O.C. Install vapor barrier consisting of factory- or field applied jacket, adhesive, vapor barrier mastic, and sealant at joints, seams, and protrusions.

   a. Repair punctures, tears, and penetrations with tape or mastic to maintain vapor barrier seal.

   b. Install vapor stops for ductwork and plenums operating below 50°F (10°C) at 18-foot (5.5 m) intervals. Vapor stops shall consist of vapor barrier mastic applied in a Z-shaped pattern over insulation face, along butt end of insulation, and over the surface. Cover insulation face and surface to be insulated a width equal to two times the insulation thickness, but not less than 3 inches (75 mm).

5. Install insulation on rectangular duct elbows and transitions with a full insulation section for each surface. Groove and score insulation to fit as closely as possible to outside and inside radius of elbows. Install insulation on round and flat-oval duct elbows with individually mitered gores cut to fit the elbow.

6. Insulate duct stiffeners, hangers, and flanges that protrude beyond insulation surface with 6 inch (150 mm) wide strips of same material used to insulate duct. Secure on alternating sides of stiffener, hanger, and flange with pins spaced 6 inches (150 mm) O.C.

3.5 FINISHES

A. Insulation with ASJ or Other Paintable Jacket Material:
Paint jacket with paint system identified below and as specified in Division 09.

1. Flat Acrylic Finish:
Two finish coats over a primer that is compatible with jacket material and finish coat paint. Add fungicidal agent to render fabric mildew proof.

   c. Finish Coat Material: Interior, flat, latex emulsion size.

B. Color:
Final color as selected by Owner's Representative. Vary first and second coats to allow visual inspection of the completed Work.

3.6 FIELD QUALITY CONTROL

A. Perform tests and inspections.

B. Tests and Inspections:

1. Inspect ductwork, randomly selected by Owner's Representative, by removing field applied jacket and insulation in layers in reverse order of their installation. Extent of inspection shall be limited to one location(s) for each duct system defined in the "Duct Insulation Schedule, General" Article.

C. All insulation applications will be considered defective Work if sample inspection reveals noncompliance with requirements.

3.7 DUCT INSULATION SCHEDULE, GENERAL

A. Plenums and Ducts Requiring Insulation:

1. Indoor, concealed supply air

B. Items Not Insulated:

1. Metal ducts with duct liner of enough thickness to comply with energy code and ASHRAE/IESNA 90.1.
2. Factory insulated flexible ducts
3. Factory insulated plenums and casings
4. Flexible connectors
5. Vibration-control devices
6. Factory-insulated access panels and doors.

3.8 INDOOR DUCT AND PLENUM INSULATION SCHEDULE

A. Concealed, Supply Air and Return Air Duct and Plenum Insulation:
Mineral fiber blanket, 1-1/2" inches (50 mm) thick and 1.0-lb/cu. ft. (16-kg/cu. m) nominal density R-6

END OF SECTION

PART 1 - GENERAL

1.1 SUMMARY

A. Section includes insulating the following HVAC piping systems: Refrigerant suction and hot-gas piping, indoors and outdoors.

B. Related Sections:

1. Section 230713 "Duct Insulation."

1.2 ACTION SUBMITTALS

A. Product Data: For each type of product indicated

B. Shop Drawings: Include plans, elevations, sections, details, and attachments to other work.

1. Detail application of protective shields, saddles, and inserts at hangers for each type of insulation and hanger.

2. Detail application of field-applied jackets.

3. Detail application at linkages of control devices.

1.3 INFORMATIONAL SUBMITTALS

A. A. Field quality control reports

1.4 QUALITY ASSURANCE

A. Surface Burning Characteristics:
For insulation and related materials, as determined by testing identical products according to ASTM E 84, by a testing and inspecting agency acceptable to authorities having jurisdiction. Factory label insulation and jacket materials and adhesive, mastic, tapes, and cement material containers, with appropriate markings of applicable testing agency.

1. Insulation Installed Indoors: Flame spread index of 25 or less, and smoke developed index of 50 or less.

2. Insulation Installed Outdoors: Flame spread index of 75 or less, and smoke developed index of 150 or less.

PART 2 - PRODUCTS

2.1 INSULATION MATERIALS

A. Products shall not contain asbestos, lead, mercury, or mercury compounds.

B. Products that come in contact with stainless steel shall have a leachable chloride content of less than 50 ppm when tested according to ASTM C 871.

C. Insulation materials for use on austenitic stainless steel shall be qualified as acceptable according to ASTMC795.

D. Flexible Elastomeric Insulation:
Closed cell, sponge or expanded rubber materials. Comply with ASTM C 534, Type I for tubular materials.

1. Products:
Subject to compliance with requirements, available products that may be incorporated into the Work include, but are not limited to, the following:

a. Aeroflex USA, Inc.; Aerocel.

b. Armacell LLC; AP Armaflex.

c. K-Fiex USA; Insul-Lock, Insui-Tube, and K-FLEX LS.

2.2 INSULATING CEMENTS

A. Mineral Fiber, Hydraulic Setting Insulating and Finishing Cement: Comply with ASTM C 449.

1. Products:
Subject to compliance with requirements, available products that may be incorporated into the Work include, but are not limited to, the following:

a. Ramco Insulation, Inc.; Ramcote 1200 and Quik-Cote.

b. Approved equal.

2.3 ADHESIVES

A. Materials shall be compatible with insulation materials, jackets, and substrates and for bonding insulation to itself and to surfaces to be insulated unless otherwise indicated.

B. Flexible Elastomeric Adhesive: Comply with MIL-A-24179A, Type II, Class I.

1. Products:
Subject to compliance with requirements, available products that may be incorporated into the Work include, but are not limited to, the following:

a. Aeroflex USA, Inc.; Aeroseal

b. Armacell LLC; Armaflex 520 Adhesive\

c. Foster Brand, Specialty Construction Brands, Inc., a business of H. B. Fuller Company; 85-75

d. K-Fiex USA; R-373 Contact Adhesive

2. For indoor applications, adhesive shall have a VOC content of 50 giL or less when calculated according to 40 CFR 59, Subpart D (EPA Method 24).

3. Adhesive shall comply with the testing and product requirements of the California Department of Health Services' "Standard Practice for the Testing of Volatile Organic Emissions from Various Sources Using Small-Scale Environmental Chambers."

C. ASJ Adhesive, and FSK and PVDC Jacket Adhesive:
Comply with MIL-A-3316C, Class 2, Grade A for bonding insulation jacket lap seams and joints.

1. Products: Subject to compliance with requirements, available products that may be incorporated into the Work include, but are not limited to, the following:

   a. Childers Brand, Specialty Construction Brands, Inc., a business of H. B. Fuller Company; CP-82

   b. Eagle Bridges -Marathon Industries; 225

   c. Foster Brand, Specialty Construction Brands, Inc., a business of H. B. Fuller Company; 85-50

   d. Mon-Eco Industries, Inc.; 22-25

2. For indoor applications, adhesive shall have a VOC content of 50 g/L or less when calculated according to 40 CFR 59, Subpart D (EPA Method 24).

3. Adhesive shall comply with the testing and product requirements of the California Department of Health Services' "Standard Practice for the Testing of Volatile Organic Emissions from Various Sources Using Small Scale Environmental Chambers."

D. PVC Jacket Adhesive: Compatible with PVC jacket.

1. Products:
Subject to compliance with requirements, available products that may be incorporated into the Work include, but are not limited to, the following:

   a. Dow Corning Corporation; 739, Dow Silicone

   b. Johns Manville; Zeston Perma-Weld, CEEL-TITE Solvent Welding Adhesive

   c. P.I.C. Plastics, Inc.; Welding Adhesive

   d. d. Speedline Corporation; Polyco VP Adhesive

2. For indoor applications, adhesive shall have a VOC content of 50 g/L or less when calculated according to 40 CFR 59, Subpart D (EPA Method 24).

3. Adhesive shall comply with the testing and product requirements of the California Department of Health Services' "Standard Practice for the Testing of Volatile Organic Emissions from Various Sources Using Small Scale Environmental Chambers."

2.4 MASTICS

A. Materials shall be compatible with insulation materials, jackets, and substrates; comply with MIL-PRF-19565C, Type II.

1. For indoor applications, use mastics that have a VOC content of 50 g/L or less when calculated according to 40 CFR 59, Subpart D (EPA Method 24).

B. Vapor Barrier Mastic: Water based; suitable for indoor use on below-ambient services.

1. Products:
Subject to compliance with requirements, available products that may be incorporated into the Work include, but are not limited to, the following:

a. Foster Brand, Specialty Construction Brands, Inc., a business of H. B. Fuller Company; 30-80/30-90

b. Vimasco Corporation; 749

2. Water-Vapor Permeance: ASTM E 96/E 96M, Procedure B, 0.013 perm (0.009 metric perm) at 43-mil (1.09-mm) dry film thickness.

3. Service Temperature Range: To plus 180°F (To plus 82°C).

4. Solids Content: ASTM D 1644, 58 percent by volume and 70 percent by weight

5. Color: White

C. Breather Mastic: Water based; suitable for indoor and outdoor use on above ambient services.

1. Products:
Subject to compliance with requirements, available products that may be incorporated into the Work include, but are not limited to, the following:

a. Childers Brand, Specialty Construction Brands, Inc., a business of H. B. Fuller Company; CP-1 0

b. Eagle Bridges - Marathon Industries; 550

c. Foster Brand, Specialty Construction Brands, Inc., a business of H. B. Fuller Company; 46-50

d. Mon-Eco Industries, Inc.; 55-50

e. Vimasco Corporation; WC-1/WC-5

2. Water Vapor Permeance: ASTM F 1249, 1.8 perms (1.2 metric perms) at 0.0625-inch (1.6-mm) dry film thickness

3. Service Temperature Range: Minus 20 to plus 180 deg F (Minus 29 to plus 82 deg C)

4. Solids Content: 60 percent by volume and 66 percent by weight

5. Color: White

2.5 SEALANTS

A. Joint Sealants:

1. Materials shall be compatible with insulation materials, jackets, and substrates. Permanently flexible, elastomeric sealant.

   a. Service Temperature Range: To plus 300°F (To plus 149°C)

   b. Color: White or gray

2. For indoor applications, sealants shall have a VOC content of 420 g/L or less when calculated according to 40 CFR 59, Subpart D (EPA Method 24).

3. Sealants shall comply with the testing and product requirements of the California Department of Health Services' "Standard Practice for the Testing of Volatile Organic Emissions from Various Sources Using Small Scale Environmental Chambers."

B. FSK and Metal Jacket Flashing Sealants:

1. Products:
Subject to compliance with requirements, available products that may be incorporated into the Work include, but are not limited to, the following:

   a. Childers Brand, Specialty Construction Brands, Inc., a business of H. B. Fuller Company; CP-76

   b. Eagle Bridges- Marathon Industries; 405

   c. Foster Brand, Specialty Construction Brands, Inc., a business of H. B. Fuller Company; 95-44

   d. Mon-Eco Industries, Inc.; 44-05

2. Materials shall be compatible with insulation materials, jackets, and substrates.

3. Fire- and water-resistant, flexible, elastomeric sealant

4. Service Temperature Range: To plus 250°F (To plus 121°C)

5. Color: Aluminum

6. For indoor applications, sealants shall have a VOC content of 420 g/L or less when calculated according to 40 CFR 59, Subpart D (EPA Method 24)

7. Sealants shall comply with the testing and product requirements of the California Department of Health Services' "Standard Practice for the Testing of Volatile Organic Emissions from Various Sources Using Small Scale Environmental Chambers."

C. ASJ Flashing Sealants, and Vinyl, PVDC, and PVC Jacket Flashing Sealants:

1. Products:

Subject to compliance with requirements, available products that may be incorporated into the Work include, but are not limited to, the following:

a. Childers Brand, Specialty Construction Brands, Inc., a business of H. B. Fuller Company; CP-76

2. Materials shall be compatible with insulation materials, jackets, and substrates

3. Fire and water resistant, flexible, elastomeric sealant

4. Service Temperature Range: To plus 250°F (to plus 121°C)

5. Color: White

6. For indoor applications, sealants shall have a VOC content of 420 g/L or less when calculated according to 40 CFR 59, Subpart D (EPA Method 24).

7. Sealants shall comply with the testing and product requirements of the California Department of Health Services' "Standard Practice for the Testing of Volatile Organic Emissions from Various Sources Using Small Scale Environmental Chambers."

2.6 FACTORY-APPLIED JACKETS

A. Insulation system schedules indicate factory applied jackets on various applications. When factory applied jackets are indicated, comply with the following:

1. ASJ:White, kraft paper, fiberglass reinforced scrim with aluminum foil backing; complying with ASTM C 1136, Type I

2. ASJ-SSL: ASJ with self-sealing, pressure sensitive, acrylic based adhesive covered by a removable protective strip; complying with ASTM C 1136, Type I

3. FSK Jacket: Aluminum foil, fiberglass reinforced scrim with kraft paper backing; complying with ASTM C 1136, Type II

4. FSP Jacket: Aluminum foil, fiberglass reinforced scrim with polyethylene backing; complying with ASTM C 1136, Type II

5. PVDC Jacket for Indoor Applications:
4-mil (0.10-mm) thick, white PVDC bi-axially oriented barrier film with a permeance at 0.02 perm (0.013 metric perm) when tested according to ASTM E 96/E 96M and with a flame spread index of 5 and a smoke developed index of 20 when tested according to ASTME84

a. Products: Subject to compliance with requirements, available product that may be incorporated into the Work include, but are not limited to, the following:

i. Dow Chemical Company (The); Saran 540 Vapor Retarder Film and Saran 560 Vapor Retarder Film

6. PVDC Jacket for Outdoor Applications:
6-mil (0.15-mm) thick, white PVDC bi-axially oriented barrier film with a permeance at 0.01

perm (0.007 metric perm) when tested according to ASTM E 96/E 96M and with a flame spread index of 5 and a smoke developed index of 25 when tested according to ASTME84.

a. Products:
Subject to compliance with requirements, available products that may be incorporated into the Work include, but are not limited to, the following:

i. Dow Chemical Company (The); Saran 540 Vapor Retarder Film and Saran 560 Vapor Retarder Film.

7. PVDC-SSL Jacket: PVDC jacket with a self-sealing, pressure sensitive, acrylic based adhesive covered by a removable protective strip.

a. Products:
Subject to compliance with requirements, available products that may be incorporated into the Work include, but are not limited to, the following:

i. Dow Chemical Company (The); Saran 540 Vapor Retarder Film and Saran 560 Vapor Retarder Film

8. Vinyl Jacket:
White vinyl with a permeance of 1.3 perms (0.86 metric perms) when tested according to ASTM E 96/E 96M, Procedure A, and complying with NFPA 90A and NFPA 90B

2.7 FIELD-APPLIED FABRIC-REINFORCING MESH

A. Woven Polyester Fabric: Approximately 1 oz./sq. yd. (34 g/sq. m) with a thread count of 10 strands by 10 strands/sq. in. (4 strands by 4 strands/sq. mm), in a Leno weave, for pipe.

1. Products:
Subject to compliance with requirements, available products that may be incorporated into the Work include, but are not limited to, the following:

a. Foster Brand, Specialty Construction Brands, Inc., a business of H. B. Fuller Company; Mast-A-Fab

b. Vimasco Corporation; Elastafab 894

2.8 FIELD-APPLIED JACKETS

A. Field-applied jackets shall comply with ASTM C 921, Type I, unless otherwise indicated.

B. FSK Jacket: Aluminum foil face, fiberglass reinforced scrim with kraft paper backing

C. PVC Jacket:
High impact resistant, UV resistant PVC complying with ASTM D 1784, Class 16354-C; thickness as scheduled; roll stock ready for shop or field cutting and forming. Thickness is indicated in field- applied jacket schedules.

2. Products:
Subject to compliance with requirements, available products that may be incorporated into the Work include, but are not limited to, the following:

a. Johns Manville; Zeston

b. P.I.C. Plastics, Inc.; FG Series

c. Proto Corporation; LoSmoke

d. Speedline Corporation; SmokeSafe

3. Adhesive: As recommended by jacket material manufacturer.

4. Color: White

5. Factory fabricated fitting covers to match jacket if available; otherwise, field fabricate.

a. Shapes:
45 and 90 degree, short and long radius elbows, tees, valves, flanges, unions, reducers, end caps, soil-pipe hubs, traps, mechanical joints, and P-trap and supply covers for lavatories.

D. Aluminum Jacket: Comply with ASTM B 209 (ASTM B 209M), Alloy 3003, 3005, 3105, or 5005, Temper H-14

1. Products:
Subject to compliance with requirements, available products that may be incorporated into the Work include, but are not limited to, the following:

a. Childers Brand, Specialty Construction Brands, Inc., a business of H. B. Fuller Company; Metal Jacketing Systems.

b. ITW Insulation Systems; Aluminum and Stainless-Steel Jacketing

c. RPR Products, Inc.; Insui-Mate.

2. Factory cut and rolled to size.

3. Finish and thickness are indicated in field-applied jacket schedules.

4. Moisture Barrier for Indoor Applications: 3-mil (0.075-mm-) thick, heat-bonded polyethylene and kraft paper.

5. Moisture Barrier for Outdoor Applications: 3-mil (0.075-mm) thick, heat bonded polyethylene and kraft paper

6. Factory-Fabricated Fitting Covers:

a. Same material, finish, and thickness as jacket

b. Preformed 2-piece or gore, 45 and 90 degree, short and long radius elbows

c. Tee covers

d. Flange and union covers

e. End caps

f. Beveled collars.

g. Valve covers

h. Field fabricate fitting covers only if factory-fabricated fitting covers are not available

E. Self-Adhesive Outdoor Jacket:
60-mil (1.5-mm) thick, laminated vapor barrier and waterproofing membrane for installation over insulation located aboveground outdoors; consisting of a rubberized bituminous resin on a cross-laminated polyethylene film covered with stucco-embossed aluminum-foil facing.

1. Products:
Subject to compliance with requirements, available products that may be incorporated into the Work include, but are not limited to, the following:

a. Polyguard Products, Inc.; Alumaguard 60

2.9 TAPES

A. ASJ Tape: White vapor-retarder tape matching factory-applied jacket with acrylic adhesive, complying with ASTM C 1136.

1. Products:
Subject to compliance with requirements, available products that may be incorporated into the Work include, but are not limited to, the following:

a. ABI, Ideal Tape Division; 428 AWF ASJ

b. Avery Dennison Corporation, Specialty Tapes Division; Fasson 0836

c. Compac Corporation; 104 and 105

d. Venture Tape; 1540 CW Plus, 1542 CW Plus, and 1542 CW Plus/SQ.

2. Width: 3 inches (75 mm)

3. Thickness: 11.5 mils (0.29 mm)

4. Adhesion: 90 ounces force/inch (1.0 N/mm) in width.

5. Elongation: 2 percent

6. Tensile Strength: 40 lbf/inch (7.2 N/mm) in width

7. ASJ Tape Disks and Squares: Precut disks or squares of ASJ tape

B. PVC Tape:
White vapor retarder tape matching field applied PVC jacket with acrylic adhesive; suitable for indoor and outdoor applications.

1. Products:
Subject to compliance with requirements, available products that may be incorporated into the Work include, but are not limited to, the following:

a. ABI, Ideal Tape Division; 370 White PVC tape

b. Compac Corporation; 130

c. Venture Tape; 1506 CW NS

2. Width: 2 inches (50 mm).

3. Thickness: 6 mils (0.15 mm)

4. Adhesion: 64 ounces force/inch (0.7 N/mm) in width

5. Elongation: 500 percent

6. Tensile Strength: 18 lbf/inch (3.3 N/mm) in width

C. Aluminum Foil Tape: Vapor-retarder tape with acrylic adhesive

1. Products:
Subject to compliance with requirements, available products that may be incorporated into the Work include, but are not limited to, the following:

a. ABI, Ideal Tape Division; 488 AWF

b. Avery Dennison Corporation, Specialty Tapes Division; Passon 0800

c. Compac Corporation; 120

d. Venture Tape; 3520 CW

2. Width: 2 inches (50 mm)

3. Thickness: mils (0.093 mm)

4. Adhesion: 100 ounces force/inch (1.1 N/mm) in width

5. Elongation: 5 percent

6. Tensile Strength: 34 lbf/inch (6.2 N/mm) in width

2.10 SECUREMENTS

A. Aluminum Bands:

ASTM B 209 (ASTM B 209M), Alloy 3003, 3005, 3105, or 5005; Temper H-14, 0.020 inch (0.51 mm) thick, l/2 inch (13 mm) wide with closed seal.

1. Products:
Subject to compliance with requirements, available products that may be incorporated into the Work include, but are not limited to, the following:

a. ITW Insulation Systems; Gerrard Strapping and Seals

b. RPR Products, Inc.; Insul-Mate Strapping, Seals, and Springs

B. Staples: Outward-clinching insulation staples, nominal 3/4-inch- (19-mm-) wide, stainless steel or Monel.

C. Wire: 0.062-inch (1.6-mm) soft annealed, galvanized steel

1. Manufacturers:
Subject to compliance with requirements, provide products by one of the following available manufacturers offering products that may be incorporated into the Work include, but are not limited to, the following:

a. C&FWire

PART 3 - EXECUTION

3.1 PREPARATION

A. Surface Preparation: Clean and dry surfaces to receive insulation. Remove materials that will adversely affect insulation application.

B. Coordinate insulation installation with the trade installing heat tracing. Comply with requirements for heat tracing that apply to insulation.

C. Mix insulating cements with clean potable water; if insulating cements are to be in contact with stainless-steel surfaces, use demineralized water.

3.2 GENERAL INSTALLATION REQUIREMENTS

A. Install insulation materials, accessories, and finishes with smooth, straight, and even surfaces; free of voids throughout the length of piping including fittings, valves, and specialties.

B. Install insulation materials, forms, vapor barriers or retarders, jackets, and thicknesses required for each item of pipe system as specified in insulation system schedules.

C. Install accessories compatible with insulation materials and suitable for the service. Install accessories that do not corrode, soften, or otherwise attack insulation or jacket in either wet or dry state.

D. Install insulation with longitudinal seams at top and bottom of horizontal runs.

E. Install multiple layers of insulation with longitudinal and end seams staggered.

F. Do not weld brackets, clips, or other attachment devices to piping, fittings, and specialties.

G. Keep insulation materials dry during application and finishing.

H. Install insulation with tight longitudinal seams and end joints. Bond seams and joints with adhesive recommended by insulation material manufacturer.

I. Install insulation with least number of joints practical.

J. Where vapor barrier is indicated, seal joints, seams, and penetrations in insulation at hangers, supports, anchors, and other projections with vapor-barrier mastic.

1. Install insulation continuously through hangers and around anchor attachments.

2. For insulation application where vapor barriers are indicated, extend insulation on anchor legs from point of attachment to supported item to point of attachment to structure. Taper and seal ends at attachment to structure with vapor barrier mastic.

3. Install insert materials and install insulation to tightly join the insert. Seal insulation to insulation inserts with adhesive or sealing compound recommended by insulation material manufacturer.

4. Cover inserts with jacket material matching adjacent pipe insulation. Install shields over jacket, arranged to protect jacket from tear or puncture by hanger, support, and shield.

K. Apply adhesives, mastics, and sealants at manufacturer's recommended coverage rate and wet and dry film thicknesses.

L. Install insulation with factory applied jackets as follows:

1. Draw jacket tight and smooth.

2. Cover circumferential joints with 3-inch (75-mm) wide strips, of same material as insulation jacket. Secure strips with adhesive and outward clinching staples along both edges of strip, spaced 4 inches (100 mm) O.C.

3. Overlap jacket longitudinal seams at least 1-l/2 inches (38 mm). Install insulation with longitudinal seams at bottom of pipe. Clean and dry surface to receive self-sealing lap. Staple laps with outward clinching staples along edge at 2 inches (50 mm) O.C.

4. For below ambient services, apply vapor barrier mastic over staples.

5. Cover joints and seams with tape, according to insulation material manufacturer's written instructions, to maintain vapor seal.

6. Where vapor barriers are indicated, apply vapor barrier mastic on seams and joints and at ends adjacent to pipe flanges and fittings.

M. Cut insulation in a manner to avoid compressing insulation more than 75 percent of its nominal thickness.

N. Finish installation with systems at operating conditions. Repair joint separations and cracking due to thermal movement.

O. Repair damaged insulation facings by applying same facing material over damaged areas. Extend patches at least 4 inches (100 mm) beyond damaged areas. Adhere, staple, and seal patches similar to butt joints.

P. For above ambient services, do not install insulation to the following:

1. Vibration control devices

2. Testing agency labels and stamps

3. Nameplates and data plates

3.3 PENETRATIONS

A. Insulation Installation at Roof Penetrations: Install insulation continuously through roof penetrations

1. Seal penetrations with flashing sealant

2. For applications requiring only indoor insulation, terminate insulation above roof surface and seal with joint sealant. For applications requiring indoor and outdoor insulation, install insulation for outdoor applications tightly joined to indoor insulation ends. Seal joint with joint sealant.

3. Extend jacket of outdoor insulation outside roof flashing at least 2 inches (50 mm) below top of roof flashing.

4. Seal jacket to roof flashing with flashing sealant.

B. Insulation Installation at Underground Exterior Wall Penetrations: Terminate insulation flush with sleeve seal

1. Seal terminations with flashing sealant.

C. Insulation Installation at Aboveground Exterior Wall Penetrations: Install insulation continuously through wall penetrations.

1. Seal penetrations with flashing sealant.

2. For applications requiring only indoor insulation, terminate insulation inside wall surface and seal with joint sealant. For applications requiring indoor and outdoor insulation, install insulation for outdoor applications tightly joined to indoor insulation ends. Seal joint with joint sealant.

3. Extend jacket of outdoor insulation outside wall flashing and overlap wall flashing at least 2 inches (50 mm).

4. Seal jacket to wall flashing with flashing sealant.

D. Insulation Installation at Interior Wall and Partition Penetrations (That Are Not Fire Rated): Install insulation continuously through walls and partitions.

E. Insulation Installation at Fire Rated Wall and Partition Penetrations: Install insulation continuously through penetrations of fire rated walls and partitions.

1. Comply with requirements in Section 078413 "Penetration Fire stopping" for fire stopping and fire resistive joint sealers.

3.4 GENERAL PIPE INSULATION INSTALLATION

A. Requirements in this article generally apply to all insulation materials except where more specific requirements are specified in various pipe insulation material installation articles.

B. Install removable insulation covers at locations indicated. Installation shall conform to the following:

1. Make removable flange and union insulation from sectional pipe insulation of same thickness as that on adjoining pipe. Install same insulation jacket as adjoining pipe insulation.

2. When flange and union covers are made from sectional pipe insulation, extend insulation from flanges or union long at least two times the insulation thickness over adjacent pipe insulation on each side of flange or union. Secure flange cover in place with stainless steel or aluminum bands. Select band material compatible with insulation and jacket.

3. Construct removable valve insulation covers in same manner as for flanges, except divide the two-part section on the vertical center line of valve body.

4. When covers are made from block insulation, make two halves, each consisting of mitered blocks wired to stainless steel fabric. Secure this wire frame, with its attached insulation, to flanges with tie wire. Extend insulation at least 2 inches (50 mm) over adjacent pipe insulation on each side of valve. Fill space between flange or union cover and pipe insulation with insulating cement. Finish cover assembly with insulating cement applied in two coats. After first coat is dry, apply and trowel second coat to a smooth finish.

5. Unless a PVC jacket is indicated in field-applied jacket schedules, finish exposed surfaces with a metal jacket.

3.5 INSTALLATION OF FLEXIBLE ELASTOMERIC INSULATION

A. Seal longitudinal seams and end joints with manufacturers recommended adhesive to eliminate openings in insulation that allow passage of air to surface being insulated.

B. Insulation Installation on Pipe Flanges:

1. Install pipe insulation to outer diameter of pipe flange.

2. Make width of insulation section same as overall width of flange and bolts, plus twice the thickness of pipe insulation.

3. Fill voids between inner circumference of flange insulation and outer circumference of adjacent straight pipe segments with cut sections of sheet insulation of same thickness as pipe insulation.

4. Secure insulation to flanges and seal seams with manufacturers recommended adhesive to eliminate openings in insulation that allow passage of air to surface being insulated.

C. Insulation Installation on Pipe Fittings and Elbows:

1. Install mitered sections of pipe insulation.

2. Secure insulation materials and seal seams with manufacturer's recommended adhesive to eliminate openings in insulation that allow passage of air to surface being insulated.

D. Insulation Installation on Valves and Pipe Specialties:

1. Install preformed valve covers manufactured of same material as pipe insulation when available.

2. When preformed valve covers are not available, install cut sections of pipe and sheet insulation to valve body. Arrange insulation to permit access to packing and to allow valve operation without disturbing insulation.

3. Install insulation to flanges as specified for flange insulation application.

4. Secure insulation to valves and specialties and seal seams with manufacturer's recommended adhesive to eliminate openings in insulation that allow passage of air to surface being insulated.

3.6 FIELD APPLIED JACKET INSTALLATION

A. Where PVC jackets are indicated, install with l-inch (25-mm) overlap at longitudinal seams and end joints; for horizontal applications. Seal with manufacturers recommended adhesive.

1. Apply two continuous beads of adhesive to seams and joints, one bead under lap and the finish bead along seam and joint edge.

B. Where metal jackets are indicated, install with 2-inch (50-mm) overlap at longitudinal seams and end joints. Overlap longitudinal seams arranged to shed water. Seal end joints with weatherproof sealant recommended by insulation manufacturer. Secure jacket with stainless-steel bands 12 inches (300 mm) O.C. and at end joints.

3.7 FINISHES

A. Pipe Insulation with ASJ or Other Paintable Jacket Material:
Paint jacket with paint system identified below and as specified in Section 09 91 13 "Exterior Painting" and Section 099123 "Interior Painting."

1. Flat Acrylic Finish:
Two finish coats over a primer that is compatible with jacket material and finish coat paint. Add fungicidal agent to render fabric mildew proof.

a. Finish Coat Material: Interior, flat, latex-emulsion size.

B. Flexible Elastomeric Thermal Insulation: After adhesive has fully cured, apply two coats of insulation manufacturer's recommended protective coating.

C. Color: Final color as selected by Owner's Representative. Vary first and second coats to allow visual inspection of the completed Work.

D. Do not field paint aluminum or stainless-steel jackets.

3.8 FIELD QUALITY CONTROL

A. Perform tests and inspections.

B. Tests and Inspections:

1. Inspect pipe, fittings, strainers, and valves, randomly selected by Owner's Representative, by removing field applied jacket and insulation in layers in reverse order of their installation. Extent of inspection shall be limited to three locations of straight pipe, three locations of threaded fittings, three locations of welded fittings, two locations of threaded strainers, two locations of welded strainers, three locations of threaded valves, and three locations of flanged valves for each pipe service defined in the "Piping Insulation Schedule, General" Article.

C. All insulation applications will be considered defective Work if sample inspection reveals noncompliance with requirements.

3.9 PIPING INSULATION SCHEDULE, GENERAL

A. Acceptable preformed pipe and tubular insulation materials and thicknesses are identified for each piping system and pipe size range. If more than one material is listed for a piping system, selection from materials listed is Contractor's option.

B. Items Not Insulated: Unless otherwise indicated, do not install insulation on the following:

1. Drainage piping located in ceiling spaces.

2. Chrome plated pipes and fittings unless there is a potential for personnel injury.

3.10 INDOOR PIPING INSULATION SCHEDULE

A. Refrigerant Suction and Hot-Gas Piping and Flexible Tubing: Flexible elastomeric, l inch (25 mm) thick.

3.11 OUTDOOR, ABOVEGROUND PIPING INSULATION SCHEDULE

A. Refrigerant Suction and Hot-Gas Piping: Insulation shall be the following:

1. Flexible Elastomeric: 2 inches (50 mm) thick.

3.12 INDOOR, FIELD-APPLIED JACKET SCHEDULE

A. Install jacket over insulation material. For insulation with factory applied jacket, install the field applied jacket over the factory applied jacket.

B. If more than one material is listed, selection from materials listed is Contractor's option.

C. Piping, Concealed:

1. PVC: 20 mils (0.5 mm) thick.

3.13 OUTDOOR, FIELD-APPLIED JACKET SCHEDULE

A. Install jacket over insulation material. For insulation with factory-applied jacket, install the field-applied jacket over the factory-applied jacket.

B. If more than one material is listed, selection from materials listed is Contractor's option.

C. Piping, Exposed:

1. Aluminum, Smooth: 0.016 inch (0.41 mm) thick.

END OF SECTION

PART 1 - GENERAL

1.1 SUMMARY

A. This Section includes refrigerant piping used for air-conditioning applications.

1.2 PERFORMANCE REQUIREMENTS

A. Line Test Pressure for Refrigerant R-410A:

1. Suction Lines for Air-Conditioning Applications: 185 psig (1276 kPa)

2. Hot Gas and Liquid Lines: 325 psig (2241 kPa)

1.3 ACTION SUBMITTALS

A. Product Data:
For each type of valve and refrigerant piping specialty indicated. Include pressure drop based on manufacturer's test data.

B. Shop Drawings:
Show layout of refrigerant piping and specialties, including pipe, tube, and fitting sizes, flow capacities, valve arrangements and locations, slopes of horizontal runs, oil traps, double risers, wall and floor penetrations, and equipment connection details. Show interface and spatial relationships between piping and equipment.

1. Refrigerant piping indicated on Drawings is schematic only. Size piping and design actual piping layout, including oil traps, double risers, specialties, and pipe and tube sizes to accommodate, as a minimum, equipment provided, elevation difference between compressor and evaporator, and length of piping to ensure proper operation and compliance with warranties of connected equipment.

1.4 INFORMATIONAL SUBMITTALS

A. Field quality control test reports.

1.5 CLOSEOUT SUBMITTALS

A. Operation and maintenance data.

1.6 QUALITY ASSURANCE

A. Comply with ASHRAE 15, "Safety Code for Refrigeration Systems."

B. Comply with ASME B31.5, "Refrigeration Piping and Heat Transfer Components."

1.7 PRODUCT STORAGE AND HANDLING

A. Store piping in a clean and protected area with end caps in place to ensure that piping interior and exterior are clean when installed.

PART 2 - PRODUCTS

2.1 COPPER TUBE AND FITTINGS

A. Copper Tube: ASTM B 280, Type ACR

B. Wrought Copper Fittings: ASME B16.22

C. Wrought Copper Unions: ASME B16.22

D. Solder Filler Metals: ASTM B 32. Use 95-5 tin antimony or alloy HB solder to join copper socket fittings on copper pipe.

E. Brazing Filler Metals: AWS A5.8

F. Flexible Connectors:

1. Body: Tin bronze bellows with woven, flexible, tinned bronze wire reinforced protective jacket.

2. End Connections: Socket ends

3. Offset Performance: Capable of minimum 3/4-inch (20-mm) misalignment in minimum 7-inch (180-mm) long assembly.

4. Pressure Rating: Factory test at minimum 500 psig (3450 kPa)

5. Maximum Operating Temperature: 250°F (121°C).

2.2 VALVES AND SPECIALTIES

A. Diaphragm Packless Valves:

1. Body and Bonnet: Forged brass or cast bronze; globe design with straight-through or angle pattern

2. Diaphragm: Phosphor bronze and stainless steel with stainless steel spring

3. Operator: Rising stem and hand wheel

4. Seat: Nylon

5. End Connections: Socket, union, or flanged

6. Working Pressure Rating: 500 psig (3450 kPa)

7. Maximum Operating Temperature: 275°F (135°C)

B. Packed Angle Valves:

1. Body and Bonnet: Forged brass or cast bronze

2. Packing: Molded stem, back seating, and replaceable under pressure

3. Operator: Rising stem

4. Seat: Nonrotating, self-aligning polytetrafluoroethylene

5. Seal Cap: Forged brass or valox hex cap

6. End Connections: Socket, union, threaded, or flanged

7. Working Pressure Rating: 500 psig (3450 kPa)

8. Maximum Operating Temperature: 275°F (135°C).

C. Check Valves:

1. Body: Ductile iron, forged brass, or cast bronze; globe pattern

2. Bonnet: Bolted ductile iron, forged brass, or cast bronze; or brass hex plug

3. Piston: Removable polytetrafluoroethylene seat

4. Closing Spring: Stainless steel

5. Manual Opening Stem: Seal cap, plated-steel stem, and graphite seal

6. End Connections: Socket, union, threaded, or flanged

7. Maximum Opening Pressure: 0.50 psig (3.4 kPa)

8. Working Pressure Rating: 500 psig (3450 kPa)

9. Maximum Operating Temperature: 275°F (135°C)

D. Service Valves:

1. Body: Forged brass with brass cap including key end to remove core

2. Core: Removable ball type check valve with stainless steel spring

3. Seat: Polytetrafluoroethylene

4. End Connections: Copper spring

5. Working Pressure Rating: 500 psig (3450 kPa)

E. Solenoid Valves: Comply with ARI 760 and UL 429; listed and labeled by an NRTL

1. Body and Bonnet: Plated steel

2. Solenoid Tube, Plunger, Closing Spring, and Seat Orifice: Stainless steel

3. Seat: Polytetrafluoroethylene

4. End Connections: Threaded

5. Electrical:

6. Molded, watertight coil in NEMA 250 enclosure of type required by location with 1/2-inch (16-GRC) conduit adapter, and 24-VAC coil

7. Working Pressure Rating: 400 psig (2760 kPa)

8. Maximum Operating Temperature: 240°F (116°C)

9. Manual operator.

F. Safety Relief Valves: Comply with ASME Boiler and Pressure Vessel Code; listed and labeled by an NRTL.

1. Body and Bonnet: Ductile iron and steel, with neoprene O-ring seal

2. Piston, Closing Spring, and Seat Insert: Stainless steel

3. Seat Disc: Polytetrafluoroethylene

4. End Connections: Threaded

5. Working Pressure Rating: 400 psig (2760 kPa)

6. Maximum Operating Temperature: 240°F (116°C).

G. Thermostatic Expansion Valves: Comply with ARI 750

1. Body, Bonnet, and Seal Cap: Forged brass or steel

2. Diaphragm, Piston, Closing Spring, and Seat Insert: Stainless steel

3. Packing and Gaskets: Non-asbestos

4. Capillary and Bulb: Copper tubing filled with refrigerant charge

5. Suction Temperature:40°F (4.4°C)

6. Superheat: Adjustable

7. Reverse flow option (for heat-pump applications)

8. End Connections: Socket, flare, or threaded union

9. Working Pressure Rating: 700 psig (4820 kPa).

H. Straight-Type Strainers:

1. Body: Welded steel with corrosion-resistant coating
2. Screen: 100-mesh stainless steel
3. End Connections: Socket or flare
4. Working Pressure Rating: 500 psig (3450 kPa)
5. Maximum Operating Temperature: 275°F (135°C).

I. Angle Type Strainers:

1. Body: Forged brass or cast bronze
2. Drain Plug: Brass hex plug
3. Screen: 100-mesh monel
4. End Connections: Socket or flare
5. Working Pressure Rating: 500 psig (3450 kPa)
6. Maximum Operating Temperature: 275°F (135°C)

J. Moisture/Liquid Indicators:

1. Body: Forged brass
2. Window: Replaceable, clear, fused glass window with indicating element protected by filter screen
3. Indicator: Color coded to show moisture content in ppm
4. Minimum Moisture Indicator Sensitivity:
5. Indicate moisture above 60 ppm
6. End Connections: Socket or flare
7. Working Pressure Rating: 500 psig (3450 kPa)
8. Maximum Operating Temperature: 240°F (116°C)

K. Replaceable Core Filter Dryers: Comply with ARI 730

1. Body and Cover: Painted steel shell with ductile-iron cover, stainless-steel screws, and neoprene gaskets
2. Filter Media: 10 microns, pleated with integral end rings; stainless steel support
3. Desiccant Media: Activated alumina

4. Designed for reverse flow (for heat-pump applications)

5. End Connections: Socket

6. Access Ports: NPS 114 (DN 8) connections at entering and leaving sides for pressure differential measurement

7. Maximum Pressure Loss: 2 psig (14 kPa)

8. Working Pressure Rating: 500 psig (3450 kPa)

9. Maximum Operating Temperature: 240°F (116°C)

L. Permanent Filter Dryers: Comply with ARI 730.

1. Body and Cover: Painted steel shell

2. Filter Media: 10 microns, pleated with integral end rings; stainless steel support

3. Desiccant Media: Activated alumina

4. Designed for reverse flow (for heat-pump applications)

5. End Connections: Socket.

6. Access Ports: NPS 114 (DN 8) connections at entering and leaving sides for pressure differential measurement

7. Maximum Pressure Loss: 2 psig (14 k.Pa)

8. Working Pressure Rating: 500 psig (3450 k.Pa)

9. Maximum Operating Temperature: 240°F (116°C)

M. Liquid Accumulators: Comply with ARI 495

1. Body: Welded steel with corrosion resistant coating

2. End Connections: Socket or threaded

3. Working Pressure Rating: 500 psig (3450 kPa)

4. Maximum Operating Temperature: 275°F (135°C)

2.3 REFRIGERANTS

A. Available Manufacturers:
Subject to compliance with requirements, manufacturers offering products that may be incorporated into the Work include, but are not limited to, the following:

1. Atofina Chemicals, Inc.
2. DuPont Company; Fluorochemicals Div.
3. Honeywell, Inc.; Genetron Refrigerants
4. INEOS Fluor Americas LLC.

B. R-410a

PART 3 - EXECUTION

3.1 PIPING APPLICATIONS

A. Suction Lines NPS 1-1/2 (DN 40) and Smaller for Conventional Air Conditioning Applications:
Copper, Type ACR, annealed temper tubing and wrought copper fittings with soldered joints.

B. Suction Lines NPS 4 (DN 100) and Smaller for Conventional Air Conditioning Applications:
Copper, Type ACR, drawn temper tubing and wrought copper fittings with brazed or soldered joints.

C. Hot-Gas and Liquid Lines:

1. NPS 1-1/2 (DN 40) and Smaller: Copper, Type ACR, annealed temper tubing and wrought copper fittings with soldered joints
2. NPS 1-1/2 (DN 40) and Smaller: Copper, Type ACR, drawn temper tubing and wrought copper fittings with soldered joints.

D. Safety Relief Valve Discharge Piping: Copper, Type ACR, drawn temper tubing and wrought copper fittings with soldered joints.

3.2 VALVE AND SPECIALTY APPLICATIONS

A. Install diaphragm packless valves in suction and discharge lines of compressor.

B. Install service valves for gage taps at strainers if they are not an integral part of strainers.

C. Install a check valve at the compressor discharge and a liquid accumulator at the compressor suction connection.

D. Except as otherwise indicated, install diaphragm packless valves on inlet and outlet side of filter dryers.

E. Install a full-sized, three-valve bypass around filter dryers.

F. Install solenoid valves upstream from each expansion valve. Install solenoid valves in horizontal lines with coil at top.

G. Install thermostatic expansion valves as close as possible to distributors on evaporators.

1. Install valve so diaphragm case is warmer than bulb.

2. Secure bulb to clean, straight, horizontal section of suction line using two bulb straps. Do not mount bulb in a trap or at bottom of the line.

3. If external equalizer lines are required, make connection where it will reflect suction-line pressure at bulb location.

H. Install safety relief valves where required by ASME Boiler and Pressure Vessel Code. Pipe safety relief valve discharge line to outside according to ASHRAE 15.

I. Install moisture/liquid indicators in liquid line at the inlet of the thermostatic expansion valve or at the inlet of the evaporator coil capillary tube.

J. Install strainers upstream from and adjacent to the following unless they are as an integral assembly for device being protected:

1. Solenoid valves

2. Thermostatic expansion valves

3. Compressor

K. Install filter dryers in liquid line between compressor and thermostatic expansion valve, and in the suction line at the compressor.

L. Install flexible connectors at compressors.

3.3 PIPING INSTALLATION

A. Drawing plans, schematics, and diagrams indicate general location and arrangement of piping systems; indicated locations and arrangements were used to size pipe and calculate friction loss, expansion, pump sizing, and other design considerations. Install piping as indicated unless deviations to layout are approved on Shop Drawings.

B. Install refrigerant piping according to ASHRAE 15.

C. Install piping in concealed locations unless otherwise indicated and except in equipment rooms and service areas.

D. Install piping indicated to be exposed and piping in equipment rooms and service areas at right angles or parallel to building walls. Diagonal runs are prohibited unless specifically indicated otherwise.

E. Install piping above accessible ceilings to allow sufficient space for ceiling panel removal.

F. Install piping adjacent to machines to allow service and maintenance.

G. Install piping free of sags and bends.

H. Install fittings for changes in direction and branch connections.

I. Select system components with pressure rating equal to or greater than system operating pressure.

J. Install piping as short and direct as possible, with a minimum number of joints, elbows, and fittings.

K. Arrange piping to allow inspection and service of refrigeration equipment. Install valves and specialties in accessible locations to allow for service and inspection.

L. Install refrigerant piping in protective conduit where installed belowground.

M. Install refrigerant piping in rigid or flexible conduit in locations where exposed to mechanical injury.

N. Slope refrigerant piping as follows:

1. Install horizontal hot gas discharge piping with a uniform slope downward away from compressor.

2. Install horizontal suction lines with a uniform slope downward to compressor.

3. Install traps and double risers to entrain oil in vertical runs.

4. Liquid lines may be installed level.

O. When brazing or soldering, remove solenoid valve coils and sight glasses; also remove valve stems, seats, and packing, and accessible internal parts of refrigerant specialties. Do not apply heat near expansion-valve bulb.

P. Install piping with adequate clearance between pipe and adjacent walls and hangers or between pipes for insulation installation.

Q. Identify refrigerant piping and valves according to Section 230553 "Identification for HVAC Piping and Equipment."

R. Install sleeves for piping penetrations of walls, ceilings, and floors. Comply with requirements for sleeves specified in Section 230517 "Sleeves and Sleeve Seals for HVAC Piping."

S. Install sleeve seals for piping penetrations of concrete walls and slabs. Comply with requirements for sleeve seals specified in Section 230517 "Sleeves and Sleeve Seals for HVAC Piping."

T. Install escutcheons for piping penetrations of walls, ceilings, and floors.

3.4 PIPE JOINT CONSTRUCTION

A. Soldered Joints: Construct joints according to ASTM B 828 or CDA's "Copper Tube Handbook."

B. Brazed Joints: Construct joints according to AWS's "Brazing Handbook," Chapter "Pipe and Tube."

1. Use Type BcuP, copper phosphorus alloy for joining copper socket fittings with copper pipe.

2. Use Type BAg, cadmium free silver alloy for joining copper with bronze or steel.

3.5 HANGERS AND SUPPORTS

A. Hanger, support, and anchor products are specified in Section 230529 "Hangers and Supports for HVAC Piping and Equipment."

B. Install the following pipe attachments:

1. Adjustable steel clevis hangers for individual horizontal runs less than 20 feet (6 m) long.

2. Roller hangers and spring hangers for individual horizontal runs 20 feet (6 m) or longer.

3. Pipe Roller: MSS SP-58, Type 44 for multiple horizontal piping 20 feet (6 m) or longer, supported on a trapeze.

4. Spring hangers to support vertical runs.

5. Copper-clad hangers and supports for hangers and supports in direct contact with copper pipe.

C. Install hangers for copper tubing with the following maximum spacing and minimum rod sizes:

1. NPS 1/2 (DN 15): Maximum span, 60 inches (1500 mm); minimum rod size, 1/4 inch (6.4 mm)

2. NPS 5/8 (DN 18): Maximum span, 60 inches (1500 mm); minimum rod size, 1/4 inch (6.4 mm)

3. NPS 1 (DN 25): Maximum span, 72 inches (1800 mm); minimum rod size, 1/4 inch (6.4 mm)

4. NPS 1-1/4 (DN 32): Maximum span, 96 inches (2400 mm); minimum rod size, 3/8 inch (9.5 mm)

5. NPS 1-1/2 (DN 40): Maximum span, 96 inches (2400 mm); minimum rod size, 3/8 inch (9.5 mm)

D. Support multi-floor vertical runs at least at each floor.

3.6 FIELD QUALITY CONTROL

A. Perform tests and inspections and prepare test reports.

B. Tests and Inspections:

1. Comply with ASME B31.5, Chapter VI.

2. Test refrigerant piping and specialties. Isolate compressor, condenser, evaporator, and safety devices from test pressure if they are not rated above the test pressure.

3. Test high- and low-pressure side piping of each system separately at not less than the pressures indicated in Part 1 "Performance Requirements" Article.

   a. Fill system with nitrogen to the required test pressure.

   b. System shall maintain test pressure at the manifold gage throughout duration of test.

   c. Test joints and fittings with electronic leak detector or by brushing a small amount of soap and glycerin solution over joints.

   d. Remake leaking joints using new materials, and retest until satisfactory results are achieved.

3.7 SYSTEM CHARGING

A. Charge system using the following procedures:

1. Install core in filter dryers after leak test but before evacuation.

2. Evacuate entire refrigerant system with a vacuum pump to 500 micrometers (67 Pa). If vacuum holds for 12 hours, system is ready for charging.

3. Break vacuum with refrigerant gas, allowing pressure to build up to 2 psig (14 kPa).

4. Charge system with a new filter-dryer core in charging line.

3.8 ADJUSTING

A. Adjust thermostatic expansion valve to obtain proper evaporator superheat.

B. Adjust high- and low-pressure switch settings to avoid short cycling in response to fluctuating suction pressure.

C. Adjust set point temperature of air conditioning or chilled water controllers to the system design temperature.

D. Perform the following adjustments before operating the refrigeration system, according to manufacturer's written instructions:

1. Open shutoff valves in condenser water circuit.

2. Verify that compressor oil level is correct.

3. Open compressor suction and discharge valves.

4. Open refrigerant valves except bypass valves that are used for other purposes.

5. Check open compressor-motor alignment and verify lubrication for motors and bearings.

E. Replace core of replaceable filter dryer after system has been adjusted and after design flow rates and pressures are established.

END OF SECTION

PART 1 - GENERAL

1.1 SUMMARY

A. Section Includes:

1. Rectangular ducts and fittings
2. Round ducts and fittings.
3. Sheet metal materials.
4. Sealants and gaskets.
5. Hangers and supports.

B. Related Sections:

1. Section 230593 "Testing, Adjusting, and Balancing for HVAC" for testing, adjusting, and balancing requirements for metal ducts.

1.2 PERFORMANCE REQUIREMENTS

A. Delegated Duct Design:
Duct construction, including sheet metal thicknesses, seam and joint construction, reinforcements, and hangers and supports, shall comply with SMACNA's "HVAC Duct Construction Standards Metal and Flexible" and performance requirements and design criteria indicated in "Duct Schedule" Article.

B. Structural Performance:
Duct hangers and supports shall withstand the effects of gravity loads and stresses within limits and under conditions described in SMACNA's "HVAC Duct Construction Standards Metal and Flexible".

C. Airstream Surfaces: Surfaces in contact with the airstream shall comply with requirements in ASHRAE 62.1.

1.3 ACTION SUBMITTALS

A. Product Data: For each type of product indicated.

B. Shop Drawings:

1. Fabrication, assembly, and installation, including plans, elevations, sections, components, and attachments to other work.
2. Factory and shop fabricated ducts and fittings.
3. Duct layout indicating sizes, configuration, and static-pressure classes.
4. Elevation of top of ducts.

5. Dimensions of main duct runs from building grid lines.

6. Fittings.

7. Reinforcement and spacing.

8. Seam and joint construction.

9. Penetrations through fire-rated and other partitions.

10. Equipment installation based on equipment being used on Project.

11. Locations for duct accessories, including dampers, turning vanes, and access doors and panels.

12. Hangers and supports, including methods for duct and building attachment and vibration isolation.

1.4 INFORMATIONAL SUBMITTALS

A. Coordination Drawings:
Plans, drawn to scale, on which the following items are shown and coordinated with each other, using input from installers of the items involved:

1. Duct installation in congested spaces, indicating coordination with general construction, building components, and other building services. Indicate proposed changes to duct layout.

2. Suspended ceiling components

3. Structural members to which duct will be attached

4. Size and location of initial access modules for acoustical tile

5. Penetrations of smoke barriers and fire-rated construction

6. Items penetrating finished ceiling including the following:

   a. Lighting fixtures

   b. Air outlets and inlets

   c. Speakers

   d. Sprinklers

   e. Access panels

   f. Fire alarm devices

1.5 QUALITY ASSURANCE

A. ASHRAE Compliance:
Applicable requirements in ASHRAE 62.1, Section 5 "Systems and Equipment" and Section 7 "Construction and System Start up."

B. ASHRAE/IESNA Compliance:
Applicable requirements in ASHRAE/IESNA 90.1, Section 6.4.4 "HVAC System Construction and Insulation."

PART 2 - PRODUCTS

2.1 RECTANGULAR DUCTS AND FITTINGS

A. General Fabrication Requirements:
Comply with SMACNA's "HVAC Duct Construction Standards Metal and Flexible" based on indicated static pressure class unless otherwise indicated.

B. Transverse Joints:
Select joint types and fabricate according to SMACNA's "HVAC Duct Construction Standards Metal and Flexible," Figure 2-1, "Rectangular Duct/Transverse Joints," for static pressure class, applicable sealing requirements, materials involved, duct support intervals, and other provisions in SMACNA's "HVAC Duct Construction Standards Metal and Flexible."

C. Longitudinal Seams:
Select seam types and fabricate according to SMACNA's "HVAC Duct Construction Standards Metal and Flexible," Figure 2-2, "Rectangular Duct/Longitudinal Seams," for static pressure class, applicable sealing requirements, materials involved, duct support intervals, and other provisions in SMACNA's "HVAC Duct Construction Standards Metal and Flexible."

D. Elbows, Transitions, Offsets, Branch Connections, and Other Duct Construction:
Select types and fabricate according to SMACNA's "HVAC Duct Construction Standards Metal and Flexible," Chapter 4, "Fittings and Other Construction," for static pressure class, applicable sealing requirements, materials involved, duct support intervals, and other provisions in SMACNA's "HVAC Duct Construction Standards Metal and Flexible."

2.2 ROUND DUCTS AND FITTINGS

A. General Fabrication Requirements:
Comply with SMACNA's "HVAC Duct Construction Standards Metal and Flexible," Chapter 3, "Round, Oval, and Flexible Duct," based on indicated static-pressure class unless otherwise indicated.

1. Manufacturers:
Subject to compliance with requirements, available manufacturers offering products that may be incorporated into the Work include, but are not limited to, the following:

a. Lindab Inc.

b. McGill AirFlow LLC

c. SEMCO Incorporated

d. Sheet Metal Connectors, Inc.

e. Spiral Manufacturing Co., Inc.

B. Transverse Joints:
Select joint types and fabricate according to SMACNA's "HVAC Duct Construction Standards Metal and Flexible," Figure 3-I, "Round Duct Transverse Joints," for static-pressure class, applicable sealing requirements, materials involved, duct support intervals, and other provisions in SMACNA's "HVAC Duct Construction Standards Metal and Flexible."

1. Transverse Joints in Ducts Larger Than 60 Inches (1524 mm) in Diameter: Flanged

C. Longitudinal Seams:
Select seam types and fabricate according to SMACNA's "HVAC Duct Construction Standards Metal and Flexible," Figure 3-2, "Round Duct Longitudinal Seams," for static pressure class, applicable sealing requirements, materials involved, duct support intervals, and other provisions in SMACNA's "HVAC Duct Construction Standards Metal and Flexible."

1. Fabricate round ducts larger than 90 inches (2286 mm) in diameter with butt welded longitudinal seams.

D. Tees and Laterals:
Select types and fabricate according to SMACNA's "HVAC Duct Construction Standards Metal and Flexible," Figure 3-5, "90 Degree Tees and Laterals," and Figure 3-6, "Conical Tees," for static pressure class, applicable sealing requirements, materials involved, duct support intervals, and other provisions in SMACNA's "HVAC Duct Construction Standards Metal and Flexible."

2.3 SHEET METAL MATERIALS

A. General Material Requirements:
Comply with SMACNA's "HVAC Duct Construction Standards Metal and Flexible" for acceptable materials, material thicknesses, and duct construction methods unless otherwise indicated. Sheet metal materials shall be free of pitting, seam marks, roller marks, stains, discolorations, and other imperfections.

B. Galvanized Sheet Steel: Comply with ASTM A 653/A 653M.

1. Galvanized Coating Designation: G60 (Z180)

2. Finishes for Surfaces Exposed to View: Mill phosphatized

C. Stainless Steel Sheets:
Comply with ASTM A 480/A 480M, Type 304 or 316, as indicated in the "Duct Schedule" Article; cold rolled, annealed, sheet. Exposed surface finish shall be No. 2B, No. 2D, No. 3, or No. 4 as indicated in the "Duct Schedule" Article.

D. Tie Rods:
Galvanized steel, 1/4-inch (6-mm) minimum diameter for lengths 36 inches (900 mm) or less; 3/8-inch (10-mm) minimum diameter for lengths longer than 36 inches (900 mm).

2.4 SEALANT AND GASKETS

A. General Sealant and Gasket Requirements:
Surface burning characteristics for sealants and gaskets shall be a maximum flame-spread index of 25 and a maximum smoke-developed index of 50 when tested according to UL 723; certified by an NRTL.

B. Two Part Tape Sealing System:

1. Tape:
Woven cotton fiber impregnated with mineral gypsum and modified acrylic/silicone activator to react exothermically with tape to form hard, durable, airtight seal.

2. Tape Width: 3 inches (76 mm)

3. Sealant: Modified styrene acrylic

4. Water resistant

5. Mold and mildew resistant

6. Maximum Static Pressure Class: 10-inch wg (2500 Pa), positive and negative

7. Service: Indoor and outdoor

8. Service Temperature: To plus 200°F (to plus 93°C)

9. Substrate: Compatible with galvanized sheet steel (both PVC coated and bare), stainless steel, or aluminum

10. For indoor applications, sealant shall have a VOC content of 250 g/L or less when calculated according to 40 CFR 59, Subpart D (EPA Method 24).

11. Sealant shall comply with the testing and product requirements of the California Department of Health Services' "Standard Practice for the Testing of Volatile Organic Emissions from Various Sources Using Small Scale Environmental Chambers."

C. Water-Based Joint and Seam Sealant:

1. Application Method: Brush on

2. Solids Content: Minimum 65 percent

3. Shore A Hardness: Minimum 20

4. Water resistant

5. Mold and mildew resistant

6. VOC: Maximum 75 g/L (less water)

7. Maximum Static Pressure Class: 10-inch wg (2500 Pa), positive and negative

8. Service: Indoor or outdoor

9. Substrate: Compatible with galvanized sheet steel (both PVC coated and bare), stainless steel, or aluminum sheets.

D. Flanged Joint Sealant: Comply with ASTM C 920

1. General: Single-component, acid-curing, silicone, elastomeric

2. Type: S

3. Grade: NS

4. Class: 25

5. Use: 0

6. For indoor applications, sealant shall have a VOC content of 250 g/L or less when calculated according to 40 CFR 59, Subpart D (EPA Method 24).

7. Sealant shall comply with the testing and product requirements of the California Department of Health Services "Standard Practice for the Testing of Volatile Organic Emissions from Various Sources Using Small Scale Environmental Chambers."

E. Flange Gaskets: Butyl rubber, neoprene, or EPDM polymer with polyisobutylene plasticizer.

F. Round Duct Joint O-Ring Seals:

1. Seal shall provide maximum leakage class of 3 cfm/100 sq. ft. at l-inch wg (0.14 Lis per sq. m) and shall be rated for 10-inch wg (2500-Pa) static pressure class, positive or negative.

2. EPDM O-ring to seal in concave bead in coupling or fitting spigot.

3. Double lipped, EPDM O-ring seal, mechanically fastened to factory fabricated couplings and fitting spigots.

2.5 HANGERS AND SUPPORTS

A. Hanger Rods for Noncorrosive Environments: Cadmium-plated steel rods and nuts.

B. Hanger Rods for Corrosive Environments: Electrogalvanized, all thread rods or galvanized rods with threads painted with zinc-chromate primer after installation.

C. Strap and Rod Sizes:
Comply with SMACNA's "HVAC Duct Construction Standards Metal and Flexible," Table 5-1 (Table 5-1M), "Rectangular Duct Hangers Minimum Size," and Table 5-2, "Minimum Hanger Sizes for Round Duct."

D. Steel Cables for Galvanized Steel Ducts: Galvanized steel complying with ASTM A 603

E. Steel Cables for Stainless Steel Ducts: Stainless steel complying with ASTM A 492

F. Steel Cable End Connections: Cadmium plated steel assemblies with brackets, swivel, and bolts designed for duct hanger service; with an automatic locking and clamping device.

G. Duct Attachments: Sheet metal screws, blind rivets, or self-tapping metal screws; compatible with duct materials

H. Trapeze and Riser Supports:

1. Supports for Galvanized Steel Ducts: Galvanized steel shapes and plates

2. Supports for Stainless Steel Ducts: Stainless steel shapes and plates

PART 3 - EXECUTION

3.1 DUCT INSTALLATION

A. Drawing plans, schematics, and diagrams indicate general location and arrangement of duct system. Indicated duct locations, configurations, and arrangements were used to size ducts and calculate friction loss for air-handling equipment sizing and for other design considerations. Install duct systems as indicated unless deviations to layout are approved on Shop Drawings and Coordination Drawings.

B. Install ducts according to SMACNA's "HVAC Duct Construction Standards Metal and Flexible" unless otherwise indicated.

C. Install round ducts in maximum practical lengths.

D. Install ducts with fewest possible joints.

E. Install factory or shop fabricated fittings for changes in direction, size, and shape and for branch connections.

F. Unless otherwise indicated, install ducts vertically and horizontally, and parallel and perpendicular to building lines.

G. Install ducts close to walls, overhead construction, columns, and other structural and permanent enclosure elements of building.

H. Install ducts with a clearance of 1 inch (25 mm), plus allowance for insulation thickness.

I. Route ducts to avoid passing through transformer vaults and electrical equipment rooms and enclosures.

J. Where ducts pass through non fire rated interior partitions and exterior walls and are exposed to view, cover the opening between the partition and duct or duct insulation with sheet metal flanges of same metal thickness as the duct. Overlap openings on four sides by at least 1-1/2 inches (38 mm).

K. Protect duct interiors from moisture, construction debris and dust, and other foreign materials. Comply with SMACNA's "IAQ Guidelines for Occupied Buildings Under Construction," Appendix G, "Duct Cleanliness for New Construction Guidelines."

3.2 INSTALLATION OF EXPOSED DUCTWORK

A. Protect ducts exposed in finished spaces from being dented, scratched, or damaged.

B. Trim duct sealants flush with metal. Create a smooth and uniform exposed bead. Do not use two-part tape sealing system.

C. Grind welds to provide smooth surface free of burrs, sharp edges, and weld splatter. When welding stainless steel with a No. 3 or 4 finish, grind the welds flush, polish the exposed welds, and treat the welds to remove discoloration caused by welding.

D. Maintain consistency, symmetry, and uniformity in the arrangement and fabrication of fittings, hangers and supports, duct accessories, and air outlets.

E. Repair or replace damaged sections and finished work that does not comply with these requirements.

3.3 DUCT SEALING

A. Seal ducts for duct static pressure, seal classes, and leakage classes specified in "Duct Schedule" Article according to SMACNA's "HVAC Duct Construction Standards Metal and Flexible."

B. Seal ducts to the following seal classes according to SMACNA's "HVAC Duct Construction Standards Metal and Flexible":

1. Comply with SMACNA's "HVAC Duct Construction Standards Metal and Flexible."

2. Outdoor, Supply Air Ducts: Seal Class A

3. Outdoor, Exhaust Ducts: Seal Class C

4. Outdoor, Return-Air Ducts: Seal Class C

5. Unconditioned Space, Supply Air Ducts in Pressure Classes 2-Inch wg (500 Pa) and Lower: Seal Class B

6. Unconditioned Space, Supply Air Ducts in Pressure Classes higher than 2-Inch wg (500 Pa): Seal Class A

7. Unconditioned Space, Exhaust Ducts: Seal Class C

8. Unconditioned Space, Return Air Ducts: Seal Class B

9. Conditioned Space, Supply Air Ducts in Pressure Classes 2-Inch wg (500 Pa) and lower: Seal Class C

10. Conditioned Space, Supply Air Ducts in Pressure Classes Higher Than 2-Inch wg (500 Pa): Seal Class B

11. Conditioned Space, Exhaust Ducts: Seal Class B

12. Conditioned Space, Return Air Ducts: Seal Class C

3.4 HANGER AND SUPPORT INSTALLATION

A. Comply with SMACNA's "HVAC Duct Construction Standards Metal and Flexible," Chapter 5, "Hangers and Supports."

B. Building Attachments:
Concrete inserts, powder actuated fasteners, or structural steel fasteners appropriate for construction materials to which hangers are being attached.

1. Install powder actuated concrete fasteners after concrete is placed and completely cured.

2. Use powder actuated concrete fasteners for standard weight aggregate concretes or for slabs more than 4 inches (100 mm) thick.

3. Do not use powder actuated concrete fasteners for seismic restraints.

C. Hanger Spacing:
Comply with SMACNA's "HVAC Duct Construction Standards - Metal and Flexible," Table 5-1 (Table 5-1M), "Rectangular Duct Hangers Minimum Size," and Table 5-2, "Minimum Hanger Sizes for Round Duct," for maximum hanger spacing; install hangers and supports within 24 inches (610 mm) of each elbow and within 48 inches (1200 mm) of each branch intersection.

D. Support vertical ducts with steel angles or channel secured to the sides of the duct with welds, bolts, sheet metal screws, or blind rivets; support at each floor and at a maximum interval of 16 feet (5 m).

E. Install upper attachments to structures. Select and size upper attachments with pull-out, tension, and shear capacities appropriate for supported loads and building materials where used.

3.5 CONNECTIONS

A. Make connections to equipment with flexible connectors.

B. Comply with SMACNA's "HVAC Duct Construction Standards Metal and Flexible" for branch, outlet and inlet, and terminal unit connections.

3.6 DUCT CLEANING

A. Clean new and existing duct system(s) before testing, adjusting, and balancing.

B. Use service openings for entry and inspection.

1. Create new openings and install access panels appropriate for duct static pressure class if required for cleaning access. Provide insulated panels for insulated or lined duct. Patch insulation and liner as recommended by duct liner manufacturer.

2. Disconnect and reconnect flexible ducts as needed for cleaning and inspection.

3. Remove and reinstall ceiling to gain access during the cleaning process.

C. Clean the following components by removing surface contaminants and deposits:

1. Air outlets and inlets (registers, grilles, and diffusers).

2. Supply, return, and exhaust fans including fan housings, plenums (except ceiling supply and return plenums), scrolls, blades or vanes, shafts, baffles, dampers, and drive assemblies.

3. Air handling unit internal surfaces and components including mixing box, coil section, air wash systems, spray eliminators, condensate drain pans, humidifiers and dehumidifiers, filters and filter sections, and condensate collectors and drains.

4. Coils and related components.

5. Return air ducts, dampers, actuators, and turning vanes except in ceiling plenums and mechanical equipment rooms.

6. Supply air ducts, dampers, actuators, and turning vanes.

7. Dedicated exhaust and ventilation components and makeup air systems.

D. Mechanical Cleaning Methodology:

1. Clean metal duct systems using mechanical cleaning methods that extract contaminants from within duct systems and remove contaminants from building.

2. Use vacuum collection devices that are operated continuously during cleaning. Connect vacuum device to downstream end of duct sections so areas being cleaned are under negative pressure.

3. Use mechanical agitation to dislodge debris adhered to interior duct surfaces without damaging integrity of metal ducts, duct liner, or duct accessories.

4. Clean fibrous glass duct liner with HEPA vacuuming equipment; do not permit duct liner to get wet. Replace fibrous glass duct liner that is damaged, deteriorated, or delaminated or that has friable material, mold, or fungus growth.

5. Clean coils and coil drain pans according to NADCA 1992. Keep drain pan operational. Rinse coils with clean water to remove latent residues and cleaning materials; comb and straighten fins.

6. Provide drainage and cleanup for wash down procedures.

7. Antimicrobial Agents and Coatings:
Apply EPA registered antimicrobial agents if fungus is present. Apply antimicrobial agents according to manufacturer's written instructions after removal of surface deposits and debris.

3.7 START-UP

A. Air Balance: Comply with requirements in Section 230593 "Testing, Adjusting, and Balancing for HVAC."

3.8 DUCT SCHEDULE

A. Fabricate ducts with galvanized sheet steel.

B. Supply Ducts:

1. Ducts Connected to Constant Volume Air-Handling Units:

a. Pressure Class: Positive 2-inch wg (500 Pa).

b. Minimum SMACNA Seal Class: A

c. SMACNA Leakage Class for Rectangular: 6

d. SMACNA Leakage Class for Round and Flat Oval: 6

C. Return Ducts:

1. Ducts Connected to Air Handling Units:

a. Pressure Class: Positive or negative 2-inch wg (500 Pa).

b. Minimum SMACNA Seal Class: A

c. SMACNA Leakage Class for Rectangular: 6

d. SMACNA Leakage Class for Round and Flat Oval: 6

D. Exhaust Ducts:

1. Ducts Connected to Fans Exhausting (ASHRAE 62.1, Class 1 and 2) Air:

a. Pressure Class: Negative 2-inch wg (500 Pa).

b. Minimum SMACNA Seal Class: A if negative pressure, and A if positive pressure

c. SMACNA Leakage Class for Rectangular: 12

d. SMACNA Leakage Class for Round and Flat Oval: 6

2. Ducts Connected to Fans Exhausting Laboratory and Process (ASHRAE 62.1, Class 3 and 4) Air:

a. Type 304, stainless steel sheet

b. Pressure Class: Positive or negative 3-inch wg (750 Pa)

c. Minimum SMACNA Seal Class: Welded seams, joints, and penetrations

d. SMACNA Leakage Class: 3

E. Outdoor-Air (Not Filtered, Heated, or Cooled) Ducts:

1. Ducts Connected to Air-Handling Units:

   a. Pressure Class: Positive or negative 2-inch wg (500 Pa)

   b. Minimum SMACNA Seal Class: A

   c. SMACNA Leakage Class for Rectangular: 6

   d. SMACNA Leakage Class for Round and Flat Oval: 3

F. Intermediate Reinforcement:

   1. Galvanized Steel Ducts: Galvanized steel

   2. Stainless Steel Ducts:

      a. Airstream: Match duct material.

      b. Not Exposed to Airstream: Match duct material.

G. Elbow Configuration:

   1. Rectangular Duct: Comply with SMACNA's "HVAC Duct Construction Standards Metal and Flexible," Figure 4-2, "Rectangular Elbows."

      a. Velocity 1000 fpm (5 m/s) or Lower:

         i. Radius Type RE 1 with minimum 0.5 radius-to-diameter ratio

         ii. Mitered Type RE 4 without vanes

      b. Velocity 1000 to 1500 fpm (5 to 7.6 m/s):

         i. Radius Type RE 1 with minimum 1.0 radius-to-diameter ratio.

         ii. Radius Type RE 3 with minimum 0.5 radius-to-diameter ratio and two vanes.

         iii. Mitered Type RE 2 with vanes complying with SMACNA's "HVAC Duct Construction Standards Metal and Flexible," Figure 4-3, "Vanes and Vane Runners," and Figure 4-4, "Vane Support in Elbows."

      c. Velocity 1500 fpm (7.6 m/s) or Higher:

         i. Radius Type RE 1 with minimum 1.5 radius-to-diameter ratio.

         ii. Radius Type RE 3 with minimum 1.0 radius-to-diameter ratio and two vanes.

         iii. Mitered Type RE 2 with vanes complying with SMACNA's "HVAC Duct Construction Standards Metal and Flexible," Figure 4-3, "Vanes and Vane Runners," and Figure 4-4, "Vane Support in Elbows."

2. Rectangular Duct: Comply with SMACNA's "HVAC Duct Construction Standards Metal and Flexible," Figure 4-2, "Rectangular Elbows."

   a. Radius Type RE I with minimum 1.5 radius-to-diameter ratio.

   b. Radius Type RE 3 with minimum 1.0 radius-to-diameter ratio and two vanes.

   c. Mitered Type RE 2 with vanes complying with SMACNA's "HVAC Duct Construction Standards Metal and Flexible," Figure 4-3, "Vanes and Vane Runners," and Figure 4-4, "Vane Support in Elbows."

3. Round Duct: Comply with SMACNA's "HVAC Duct Construction Standards Metal and Flexible," Figure 3-4, "Round Duct Elbows."

   a. Minimum Radius-to-Diameter Ratio and Elbow Segments:
Comply with SMACNA's "HVAC Duct Construction Standards Metal and Flexible," Table 3-1, "Mitered Elbows." Elbows with less than 90-degree change of direction have proportionately fewer segments.

      i. Velocity 1000 fpm (5 m/s) or Lower: 0.5 radius-to-diameter ratio and three segments for 90-degree elbow.

      ii. Velocity 1000 to 1500 fpm (5 to 7.6 m/s): 1.0 radius-to-diameter ratio and four segments for 90-degree elbow.

      iii. Velocity 1500 fpm (7.6 m/s) or Higher: 1.5 radius-to-diameter ratio and five segments for 90-degree elbow.

      iv. Radius-to Diameter Ratio: 1.5.

   b. Round Elbows, 12 Inches (305 mm) and Smaller in Diameter: Stamped or pleated.

   c. Round Elbows, 14 Inches (356 mm) and Larger in Diameter: Standing seam.

H. Branch Configuration:

1. Rectangular Duct: Comply with SMACNA's "HVAC Duct Construction Standards Metal and Flexible," Figure 4-6, "Branch Connection."

   a. Rectangular Main to Rectangular Branch: 45-degree entry.

   b. Rectangular Main to Round Branch: Spin in.

2. Round: Comply with SMACNA's "HVAC Duct Construction Standards - Metal and Flexible," Figure 3-5, "90 Degree Tees and Laterals," and Figure 3-6, "Conical Tees." Saddle taps are permitted in existing duct.

   a. Velocity 1000 fpm (5 m/s) or lower: 90-degree tap.

   b. Velocity 1000 to 1500 fpm (5 to 7.6 m/s): Conical tap.

c. Velocity 1500 fpm (7.6 m/s) or Higher: 45-degree lateral

END OF SECTION

PART 1 - GENERAL

1.1 SUMMARY

A. Section Includes:

1. Backdraft and pressure relief dampers
2. Manual volume dampers
3. Control dampers
4. Fire dampers
5. Flange connectors
6. Turning vanes
7. Duct-mounted access doors
8. Flexible connectors
9. Flexible ducts
10. Duct accessory hardware

B. Related Requirements:

1. Section 233113 "Metal Ducts.

1.2 ACTION SUBMITTALS

A. Product Data: For each type of product.

B. Shop Drawings: For duct accessories. Include plans, elevations, sections, details and attachments to other work.

1. Detail duct accessories fabrication and installation in ducts and other construction. Include dimensions, weights, loads, and required clearances; and method of field assembly into duct systems and other construction. Include the following:

a. Special fittings

b. Manual volume damper installations

c. Control-damper installations

d. Fire-damper installations, including sleeves; and duct-mounted access doors.

e. Wiring Diagrams: For power, signal, and control wiring

1.3 CLOSEOUT SUBMITTALS

A. Operation and maintenance data.

PART 2 - PRODUCTS

2.1 ASSEMBLY DESCRIPTION

A. Comply with NFPA 90A, "Installation of Air Conditioning and Ventilating Systems," and with NFPA 90B, "Installation of Warm Air Heating and Air Conditioning Systems."

B. Comply with SMACNA's "HVAC Duct Construction Standards Metal and Flexible" for acceptable materials, material thicknesses, and duct construction methods unless otherwise indicated. Sheet metal materials shall be free of pitting, seam marks, roller marks, stains, discolorations, and other imperfections.

2.2 MATERIALS

A. Galvanized Sheet Steel: Comply with ASTM A 653/A 653M

1. Galvanized Coating Designation: G60 (Zl80)

2. Exposed Surface Finish: Mill phosphatized

B. Stainless Steel Sheets: Comply with ASTM A 480/A 480M, Type 304, and having a No.2 finish.

C. Aluminum Sheets:
Comply with ASTM B 209 (ASTM B 209M), Alloy 3003, Temper H14; with mill finish for concealed ducts and standard, l-side bright finish for exposed ducts.

D. Extruded Aluminum: Comply with ASTM B 221 (ASTM B 221M), Alloy 6063, Temper T6.

E. Reinforcement Shapes and Plates:
Galvanized steel reinforcement where installed on galvanized sheet metal ducts; compatible materials for aluminum and stainless-steel ducts.

F. Tie Rods:
Galvanized steel, l/4-inch (6-mm) minimum diameter for lengths 36 inches (900 mm) or less; 3/8-inch (l0-mm) minimum diameter for lengths longer than 36 inches (900 mm).

2.3 BACKDRAFT AND PRESSURE RELIEF DAMPERS

A. Manufacturers:
Subject to compliance with requirements, provide products by one of the following available manufacturers offering products that may be incorporated into the Work include, but are not limited to, the following:

1. Air Balance Inc.; a division of Mestek, Inc.
2. American Warming and Ventilating; a division of Mestek, Inc.
3. Greenheck Fan Corporation
4. Nailor Industries Inc.
5. Pottorff
6. Ruskin Company

B. Description: Gravity balanced

C. Maximum Air Velocity: 2000 fpm (10 m/s)

D. Maximum System Pressure: 3-inch wg (0.8 kPa)

E. Frame: Hat-shaped, 0.09-inch (2.4-mm) thick extruded aluminum, with welded comers or mechanically attached.

F. Blades:
Multiple single piece blades, end pivoted, maximum 6-inch (150-mm) width, 0.050-inch (1.2-mm) thick extruded aluminum with sealed edges.

G. Blade Action: Parallel

H. Blade Seals: Extruded vinyl, mechanically locked

I. Blade Axles:

1. Material: Galvanized steel
2. Diameter: 0.20 inch (5 mm)

J. Tie Bars and Brackets: Aluminum

K. Return Spring: Adjustable tension

L. Bearings: Synthetic pivot bushings

M. Accessories:

1. Adjustment device to permit setting for varying differential static pressure
2. Counterweights and spring assist kits for vertical airflow installations
3. 90-degree stops

2.4 MANUAL VOLUME DAMPERS

A. Standard, Steel, Manual Volume Dampers:

1. Manufacturers:
Subject to compliance with requirements, provide products by one of the following available manufacturers offering products that may be incorporated into the Work include, but are not limited to, the following:

   a. Air Balance Inc.; a division of Mestek, Inc.

   b. American Warming and Ventilating; a division of Mestek, Inc.

   c. Flexmaster U.S.A., Inc.

   d. McGill AirFlow LLC.

   e. Nailor Industries Inc.

   f. Pottorff.

   g. Ruskin Company.

2. Standard leakage rating, with linkage outside airstream

3. Suitable for horizontal or vertical applications

4. Frames:

   a. Hat-shaped, 0.094-inch (2.4-mm) thick, galvanized sheet steel

   b. Mitered and welded comers

   c. Flanges for attaching to walls and flangeless frames for installing in ducts

5. Blades:

   a. Multiple or single blade

   b. Parallel- or opposed-blade design

   c. Stiffen damper blades for stability

   d. Galvanized steel, 0.064 inch (1.62 mm) thick

6. Blade Axles: Galvanized steel

7. Bearings:

   a. Molded synthetic

   b. Dampers in ducts with pressure classes of 3-inch wg (750 Pa) or less shall have axles the full length of damper blades and bearings at both ends of operating shaft.

8. Tie Bars and Brackets: Galvanized steel

B. Jackshaft:

1. Size: 0.5-inch (13-mm) diameter

2. Material:
Galvanized steel pipe rotating within pipe bearing assembly mounted on supports at each mullion and at each end of multiple-damper assemblies.

3. Length and Number of Mountings: As required to connect linkage of each damper in multiple damper assembly.

C. Damper Hardware:

1. Zinc plated, die-cast core with dial and handle made of 3/32-inch (2.4-mm) thick zinc plated steel, and a 3/4-inch (19-mm) hexagon locking nut.

2. Include center hole to suit damper operating rod size.

3. Include elevated platform for insulated duct mounting.

2.5 CONTROL DAMPERS

A. Manufacturers:
Subject to compliance with requirements, provide products by one of the following available manufacturers offering products that may be incorporated into the Work include, but are not limited to, the following:

1. American Warming and Ventilating; a division of Mestek, Inc.

2. Arrow United Industries; a division of Mestek, Inc.

3. Greenheck Fan Corporation

4. Nailor Industries Inc.

5. Pottorff.

6. Ruskin Company

7. Young Regulator Company

B. Frames:

1. Hat shaped

2. 0.125-inch (3-mm) thick aluminum.

C. Blades:

1. Multiple blade with maximum blade width of 6 inches (152 mm)

2. Parallel and opposed blade design

3. Aluminum

4. 0.0747-inch (1.9-mm) thick dual skin

5. Blade Edging: Closed cell neoprene

D. Blade Axles:
1/2-inch (13-mm) diameter; stainless steel; blade linkage hardware of zinc plated steel and brass; ends sealed against blade bearings.

1. Operating Temperature Range: To plus 200°F (to plus 93°C)

E. Bearings:

1. Molded synthetic

2. Dampers in ducts with pressure classes of 3-inch wg (750 Pa) or less shall have axles the full length of damper blades and bearings at both ends of operating shaft.

3. Thrust bearings at each end of every blade

2.6 FLANGE CONNECTORS

A. Manufacturers:
Subject to compliance with requirements, available manufacturers offering products that may be incorporated into the Work include, but are not limited to, the following:

1. Ductmate Industries, Inc.

2. Nexus PDQ; Division of Shilco Holdings Inc.

3. Ward Industries, Inc.; a division of Hart & Cooley, Inc.

B. Description:
Add on or roll formed, factory fabricated, slide on transverse flange connectors, gaskets, and components.

C. Material: Galvanized steel

D. Gage and Shape: Match connecting ductwork.

2.7 TURNING VANES

A. Manufacturers:
Subject to compliance with requirements, provide products by one of the following available manufacturers offering products that may be incorporated into the Work include, but are not limited to, the following:

1. Ductmate Industries, Inc.

2. Duro Dyne Inc.

3. Elgen Manufacturing

4. METALAIRE, Inc.

B. Manufactured Turning Vanes for Metal Ducts:
Curved blades of galvanized sheet steel; support with bars perpendicular to blades set; set into vane runners suitable for duct mounting.

1. Acoustic Turning Vanes: Fabricate airfoil shaped aluminum extrusions with perforated faces and fibrous-glass fill.

C. General Requirements:
Comply with SMACNA's "HVAC Duct Construction Standards Metal and Flexible"; Figures 4-3, "Vanes and Vane Runners," and 4-4, "Vane Support in Elbows."

D. Vane Construction: Double wall

2.8 DUCT-MOUNTED ACCESS DOORS

A. Manufacturers:
Subject to compliance with requirements, provide products by one of the following available manufacturers offering products that may be incorporated into the Work include, but are not limited to, the following:

1. American Warming and Ventilating; a division of Mestek, Inc.

2. Ductmate Industries, Inc.

3. Flexmaster U.S.A., Inc.

4. Greenheck Fan Corporation

5. McGill AirFlow LLC.

6. Nailor Industries Inc.

7. Pottorff

B. Duct Mounted Access Doors:
Fabricate access panels according to SMACNA's "HVAC Duct Construction Standards Metal and Flexible"; Figures 7-2 (7-2M), "Duct Access Doors and Panels," and 7-3, "Access Doors-Round Duct."

1. Door:

a. Double wall, rectangular

b. Galvanized sheet metal with insulation fill and thickness as indicated for duct pressure class.

c. Vision panel

d. Hinges and Latches: 1-by-1-inch (25-by-25 mm) butt or piano hinge and cam latches.

e. Fabricate doors airtight and suitable for duct pressure class.

2. Frame: Galvanized sheet steel, with bend-over tabs and foam gaskets

3. Number of Hinges and Locks:

a. Access Doors Less Than 12 Inches (300 mm) Square: No hinges and two sash locks

b. Access Doors up to 18 Inches (460 mm) Square: Continuous and two sash locks

c. Access Doors up to 24 by 48 Inches (600 by 1200 mm): Three hinges and two compression latches

d. Access Doors Larger Than 24 by 48 Inches (600 by 1200 mm): Four hinges and two compression latches with outside and inside handles.

2.9 FLEXIBLE CONNECTORS

A. Manufacturers:
Subject to compliance with requirements, provide products by one of the following available manufacturers offering products that may be incorporated into the Work include, but are not limited to, the following:

1. Ductmate Industries, Inc.

2. Duro Dyne Inc.

3. Elgen Manufacturing

B. Materials: Flame retardant or noncombustible fabrics

C. Coatings and Adhesives: Comply with UL 181, Class 1

D. Metal Edged Connectors:
Factory fabricated with a fabric strip 3-1/2 inches (89 mm) wide attached to two strips of 2-3/4-inch (70-mm) wide, 0.028-inch (0.7-mm) thick, galvanized sheet steel or 0.032-inch (0.8-mm) thick aluminum sheets. Provide metal compatible with connected ducts.

E. Indoor System, Flexible Connector Fabric: Glass fabric double coated with neoprene

1. Minimum Weight: 26 oz./sq. yd. (880 g/sq. m)

2. Tensile Strength: 480 lbf/inch (84 N/mm) in the warp and 360 lbf/inch (63 N/mm) in the filling

3. Service Temperature: To plus 200°F (to plus 93°C).

F. Outdoor System, Flexible Connector Fabric: Glass fabric double coated with weatherproof, synthetic rubber resistant to UV rays and ozone.

1. Minimum Weight: 24 oz./sq. yd. (810 g/sq. m)

2. Tensile Strength: 530 lbf/inch (93 N/mm) in the warp and 440 lbf/inch (77 N/mm) in the filling.

3. Service Temperature: To plus 250°F (to plus 121°C).

2.10 FLEXIBLE DUCTS

A. Manufacturers:
Subject to compliance with requirements, provide products by one of the following available manufacturers offering products that may be incorporated into the Work include, but are not limited to, the following:

1. Flexmaster U.S.A., Inc.

2. McGill AirFlow LLC.

3. Ward Industries, Inc.; a division of Hart & Cooley, Inc.

B. Insulated, Flexible Duct:
UL 181, Class I, aluminum laminate and polyester film with latex adhesive supported by helically wound, spring steel wire; fibrous glass insulation; aluminized vapor barrier film.

1. Pressure Rating: 10-inch wg (2500 Pa) positive and 1.0-inch wg (250 Pa) negative

2. Maximum Air Velocity: 4000 fpm (20 m/s)

3. Temperature Range: To plus 210°F (to plus 99°C)

4. Insulation R-value: Comply with ASHRAEIIESNA 90.1, R-6.0 minimum

C. Flexible Duct Connectors:

1. Clamps: Nylon strap in sizes 3 through 18 inches (75 through 460 mm), to suit duct size

2. Non-Clamp Connectors: Liquid adhesive plus tape.

2.11 DUCT ACCESSORY HARDWARE

A. Instrument Test Holes:
Cast iron or cast aluminum to suit duct material, including screw cap and gasket. Size to allow insertion of Pitot tube and other testing instruments and of length to suit duct insulation thickness.

B. Adhesives: High strength, quick setting, neoprene based, waterproof, and resistant to gasoline and grease.

PART 3 - EXECUTION

3.1 INSTALLATION

A. Install duct accessories according to applicable details in SMACNA's "HVAC Duct Construction Standards Metal and Flexible" for metal ducts.

B. Install duct accessories of materials suited to duct materials; use galvanized steel accessories in galvanized steel and fibrous glass ducts, stainless steel accessories in stainless steel ducts, and aluminum accessories in aluminum ducts.

C. Install backdraft and/or control dampers at inlet of exhaust fans or exhaust ducts as close as possible to exhaust fan unless otherwise indicated.

D. Install volume dampers at points on supply, return, and exhaust systems where branches extend from larger ducts. Where dampers are installed in ducts having duct liner, install dampers with hat channels of same depth as liner, and terminate liner with nosing at hat channel.

1. Install steel volume dampers in steel ducts.

2. Install aluminum volume dampers in aluminum ducts.

E. Set dampers to fully open position before testing, adjusting, and balancing.

F. Install test holes at fan inlets and outlets and elsewhere as indicated.

G. Install fire and smoke dampers according to UL listing.

H. Install duct access doors on sides of ducts to allow for inspecting, adjusting, and maintaining accessories and equipment at the following locations:

1. On both sides of duct coils

2. At outdoor-air intakes and mixed-air plenums

3. At drain pans and seals

4. Downstream from manual volume dampers, control dampers, backdraft dampers, and equipment

5. Adjacent to and close enough to fire or smoke dampers, to reset or reinstall fusible links Access doors for access to fire or smoke dampers having fusible links shall be pressure relief access doors and shall be outward operation for access doors installed upstream from dampers and inward operation for access doors installed downstream from dampers.

6. At each change in direction and at maximum 50-foot (15-m) spacing

7. Upstream or downstream from duct silencers

8. Control devices requiring inspection

9. Elsewhere as indicated

I. Install access doors with swing against duct static pressure.

J. Access Door Sizes:

1. One Hand or Inspection Access: 8 by 5 inches (200 by 125 mm)

2. Two Hand Access: 12 by 6 inches (300 by 150 mm)

3. Head and Hand Access: 18 by 10 inches (460 by 250 mm)

4. Head and Shoulders Access: 21 by 14 inches (530 by 355 mm)

5. Body Access: 25 by 14 inches (635 by 355 mm)

6. Body plus Ladder Access: 25 by 17 inches (635 by 430 mm).

K. Label access doors according to Section 230553 "Identification for HVAC Piping and Equipment" to indicate the purpose of access door.

L. Install flexible connectors to connect ducts to equipment.

M. Connect terminal units to supply ducts directly or with maximum 12-inch (300-mm) lengths of flexible duct. Do not use flexible ducts to change directions.

N. Connect diffusers or light troffer boots to ducts with maximum 60-inch (1500-mm) lengths of flexible duct clamped or strapped in place.

O. Connect flexible ducts to metal ducts with draw bands.

P. Install duct test holes where required for testing and balancing purposes.

3.2 FIELD QUALITY CONTROL

A. Tests and Inspections:

1. Operate dampers to verify full range of movement.

2. Inspect locations of access doors and verify that purpose of access door can be performed.

3. Inspect turning vanes for proper and secure installation.

END OF SECTION

PART 1 - GENERAL

1.1 SUMMARY

A. Section Includes:

1. In-line centrifugal fans.

1.2 ACTION SUBMITTALS

A. Product Data: For each type of product indicated.

B. Shop Drawings: Include plans, elevations, sections, details, and attachments to other work.

1. Detail equipment assemblies and indicate dimensions, weights, loads, required clearances, method of field assembly, components, and location and size of each field connection.

2. Wiring Diagrams: For power, signal, and control wiring.

1.3 CLOSEOUT SUBMITTALS

A. Operation and maintenance data.

1.4 QUALITY ASSURANCE

A. Electrical Components, Devices, and Accessories:
Listed and labeled as defined in NFPA 70, by a qualified testing agency, and marked for intended location and application.

B. AMCA Compliance:
Fans shall have AMCA-Certified performance ratings and shall bear the AMCA- Certified Ratings Seal.

PART 2 - PRODUCTS

2.1 IN-LINE CENTRIFUGAL FANS

A. Basis of Design Product:
Subject to compliance with requirements, provide product indicated on Drawings or comparable product by one of the following:

1. Greenheck Fan Corporation

2. Loren Cook Company

3. PennBarry

B. Housing:
Split, spun aluminum with aluminum straightening vanes, inlet and outlet flanges, and support bracket adaptable to floor, side wall, or ceiling mounting.

C. Direct-Drive Units:
Motor mounted in airstream; factory wired to disconnect switch located on outside of fan housing.

D. Fan Wheels: Aluminum, airfoil blades welded to aluminum hub

E. Accessories:

1. Variable-Speed Controller: Solid state control to reduce speed from 100 to less than 50 percent.

2. Volume Control Damper: Manually operated with quadrant lock, located in fan outlet

3. Companion Flanges: For inlet and outlet duct connections

4. Fan Guards: 1/2 by l-inch (13 by 25-mm) mesh of galvanized steel in removable frame. Provide guard for inlet or outlet for units not connected to ductwork.

5. Motor and Drive Cover (Belt Guard): Epoxy-coated steel.

2.2 MOTORS

A. Comply with NEMA designation, temperature rating, service factor, enclosure type, and manufacturers' standard efficiency requirements for motors.

1. Motor Sizes:
Minimum size as indicated. If not indicated, large enough so driven load will not require motor to operate in service factor range above 1.0.

B. Enclosure Type: Totally enclosed, fan cooled.

2.3 SOURCE QUALITY CONTROL

A. Certify sound power level ratings according to AMCA 301, "Methods for Calculating Fan Sound Ratings from Laboratory Test Data." Factory test fans according to AMCA 300, "Reverberant Room Method for Sound Testing of Fans." Label fans with the AMCA-Certified Ratings Seal.

B. Certify fan performance ratings, including flow rate, pressure, power, air density, speed of rotation, and efficiency by factory tests according to AMCA 210, "Laboratory Methods of Testing Fans for Aerodynamic Performance Rating." Label fans with the AMCA-Certified Ratings Seal.

PART 3 - EXECUTION

3.1 INSTALLATION

A. Support suspended units from structure using threaded steel rods and elastomeric hangers having a static deflection of 1 inch (25 mm). Vibration control devices furnished with fans.

B. Install units with clearances for service and maintenance.

C. Label units as indicated on plans.

3.2 CONNECTIONS

A. Drawings indicate general arrangement of ducts and duct accessories. Make final duct connections with flexible connectors. Flexible connectors are specified in Section 233300 "Air Duct Accessories."

B. Install ducts adjacent to power ventilators to allow service and maintenance.

C. Ground equipment according to "Grounding and Bonding for Electrical Systems."

D. Connect wiring according to Section 26 43 13 "Low-Voltage Electrical Power Conductors and Cables."

3.3 FIELD QUALITY CONTROL

A. Perform tests and inspections.

1. Manufacturer's Field Service:
Engage a factory authorized service representative to inspect components, assemblies, and equipment installations, including connections, and to assist in testing.

B. Tests and Inspections:

1. Verify that shipping, blocking, and bracing are removed.

2. Verify that unit is secure on mountings and supporting devices and that connections to ducts and electrical components are complete. Verify that proper thermal overload protection is installed in motors, starters, and disconnect switches.

3. Verify that cleaning and adjusting are complete.

4. Disconnect fan drive from motor, verify proper motor rotation direction, and verify fan wheel free rotation and smooth bearing operation. Reconnect fan drive system, align and adjust belts, and install belt guards.

5. Adjust damper linkages for proper damper operation.

6. Verify lubrication for bearings and other moving parts.

7. Verify that manual and automatic volume control and fire and smoke dampers in connected ductwork systems are in fully open position.

8. Disable automatic temperature control operators, energize motor and adjust fan to indicated rpm, and measure and record motor voltage and amperage.

9. Shut unit down and reconnect automatic temperature control operators.

10. Remove and replace malfunctioning units and retest as specified above.

C. Test and adjust controls and safeties. Replace damaged and malfunctioning controls and equipment.

D. Prepare test and inspection reports.

3.4 ADJUSTING

A. Adjust damper linkages for proper damper operation.

B. Adjust belt tension.

C. Comply with requirements in Section 230593 "Testing, Adjusting, and Balancing for HVAC" for testing, adjusting, and balancing procedures.

D. Replace fan and motor pulleys as required to achieve design airflow.

E. Lubricate bearings.

END OF SECTION

PART 1 - GENERAL

1.1 SUMMARY

A. Section Includes:

1. Rectangular and square ceiling diffusers

2. Louver face diffusers

3. Fixed face registers and grilles

B. Related Sections:

1. Division 08 for fixed and adjustable louvers and wall vents, whether or not they are connected to ducts.

2. Section 233300 "Air Duct Accessories" for fire and smoke dampers and volume-control dampers not integral to diffusers, registers, and grilles.

1.2 ACTION SUBMITTALS

A. Product Data: For each type of product indicated, include the following:

1. Data Sheet:
Indicate materials of construction, finish, and mounting details; and performance data including throw and drop, static pressure drop, and noise ratings.

2. Diffuser, Register, and Grille Schedule: Indicate drawing designation, room location, quantity, model number, size, and accessories furnished.

B. Samples:
For each exposed product and for each color and texture specified

PART 2 - PRODUCTS

2.1 CEILING DIFFUSERS

A. Rectangular and Square Ceiling Diffusers:

1. Basis of Design Product:
Subject to compliance with requirements, provide product indicated on Drawings or comparable product by one of the following:

a. Carnes

b. Nailor Industries Inc.

c. Price Industries

d. Titus

2. Devices shall be specifically designed for variable-air-volume flows.

3. Material: Aluminum.

4. Finish: Baked enamel, color selected by Owner's Representative.

5. Face Size: 24 by 24 inches (600 by 600 mm).

6. Face Style: Three cone.

7. Mounting: T-bar.

8. Pattern: Fixed.

B. Louver Face Diffuser:

1. Basis-of-Design Product:
Subject to compliance with requirements, provide product indicated on Drawings or comparable product by one of the following:

a. Carnes

b. Nailor Industries Inc.

c. Price Industries

d. Titus

2. Devices shall be specifically designed for variable-air-volume flows.

3. Material: Aluminum.

4. Finish: Baked enamel, color selected by Owner's Representative.

2.2 REGISTERS AND GRILLES

A. Adjustable Bar Register:

1. Basis-of-Design Product:
Subject to compliance with requirements, provide product indicated on Drawings or comparable product by one of the following:

a. Carnes

b. Nailor Industries Inc.

c. Price Industries

d. Titus

2. Material: Aluminum

3. Finish: Baked enamel, color selected by Owner's Representative

4. Mounting: Concealed

B. Adjustable Bar Grille:

1. Basis of Design Product:
Subject to compliance with requirements, provide product indicated on Drawings or comparable product by one of the following:

a. Carnes

b. Nailor Industries Inc.

c. Price Industries

d. Titus

2. Material: Aluminum

3. Finish: Baked enamel, color selected by Owner's Representative

4. Mounting: Concealed

C. Fixed Face Register:

1. Basis of Design Product:
Subject to compliance with requirements, provide product indicated on Drawings or comparable product by one of the following:

a. Carnes

b. Nailor Industries Inc.

c. Price Industries

d. Titus

2. Material: Aluminum

3. Finish: Baked enamel, color selected by Owner's Representative.

4. Mounting: Concealed.

D. Fixed Face Grille:

1. Basis of Design Product:
Subject to compliance with requirements, provide product indicated on Drawings or comparable product by one of the following:

a. Carnes

b. Nailor Industries Inc.

c. Price Industries

d. Titus

2. Material: Aluminum

3. Finish: Baked enamel, color selected by Owner's Representative

4. Face Arrangement: 1/2-by-1/2-by-1/2-inch (13-by-13-by-13-mm) grid core

5. Mounting: Concealed

2.3 SOURCE QUALITY CONTROL

A. Verification of Performance:
Rate diffusers, registers, and grilles according to ASHRAE 70, "Method of Testing for Rating the Performance of Air Outlets and Inlets."

PART 3 - EXECUTION

3.1 INSTALLATION

A. Install diffusers, registers, and grilles level and plumb.

B. Ceiling Mounted Outlets and Inlets:
Drawings indicate general arrangement of ducts, fittings, and accessories. Air outlet and inlet locations have been indicated to achieve design requirements for air volume, noise criteria, airflow pattern, throw, and pressure drop. Make final locations where indicated, as much as practical. For units installed in lay-in ceiling panels, locate units in the center of panel. Where architectural features or other items conflict with installation, notify Owner's Representative for a determination of final location.

C. Install diffusers, registers, and grilles with airtight connections to ducts and to allow service and maintenance of dampers, air extractors, and fire dampers.

3.2 ADJUSTING

A. After installation, adjust diffusers, registers, and grilles to air patterns indicated, or as directed, before starting air balancing.

END OF SECTION

PART 1 - GENERAL

1.1 SUMMARY

A. Section includes packaged, air-cooled, refrigerant compressor and condenser units.

1.2 ACTION SUBMITTALS

A. Product Data: For each type of product indicated.

B. Shop Drawings: For compressor and condenser units. Include plans, elevations, sections, details, and attachments to other work.

1. Wiring Diagrams: For power, signal, and control wiring.

1.3 QUALITY ASSURANCE

A. Electrical Components, Devices, and Accessories:
Listed and labeled as defined in NFPA 70, by a qualified testing agency, and marked for intended location and application.

B. Fabricate and label refrigeration system according to ASHRAE 15, "Safety Standard for Refrigeration Systems."

C. ASHRAE/IESNA 90.1 Compliance:
Applicable requirements in ASHRAE/IESNA 90.1, Section 6, "Heating, Ventilating, and Air-Conditioning."

1.4 WARRANTY

A. Special Warranty:
Manufacturer's standard form in which manufacturer agrees to repair or replace components of compressor and condenser units that fail in materials or workmanship within specified warranty period.

1. Failures include, but are not limited to, the following:

a. Compressor failure

b. Condenser coil leak

2. Warranty Period: Five years from date of Substantial Completion

3. Warranty Period (Compressor Only): 10 years from date of Substantial Completion

4. Warranty Period (Components Other Than Compressor): Five years from date of Substantial Completion

PART 2 - PRODUCTS

2.1 COMPRESSOR AND CONDENSER UNITS, AIR-COOLED (1 TO 5 TONS)

A. Manufacturers:

1. Carrier Corporation; Commercial HVAC Systems.

2. Daikin Manufacturing

3. Trane; a brand of Ingersoll Rand.

B. Description:

C. Packaged, factory assembled and tested, suitable for outdoor use; consisting of casing, compressors, condenser coils, condenser fans and motors, and unit controls.

D. Unit Casing:

E. Galvanized steel finished with baked enamel; with removable panels for access to controls, weep holes for water drainage, and mounting holes in base. Mount service valves, fittings, and gage ports on exterior of casing. Meet salt spray test in accordance with ASTM B117.

1. Nonfused disconnect switch, factory mounted and wired, for single external electrical power connection.

F. Compressor:

G. Scroll, hermetically sealed, with rubber vibration isolators.

1. Motor: Two speed, and includes thermal- and current-sensitive overload devices, start capacitor, relay, and contactor.

2. Two-Speed Compressor: Include manual-reset, high-pressure switch and automatic-reset, low-pressure switch.

H. Refrigerant: R-410A or R-407C.

I. Condenser Coil:
Seamless copper-tube, aluminum-fin coil; circuited for integral liquid sub-cooler, with removable drain pan and brass service valves with service ports. Coating shall be epoxy or phenolic epoxy type rated for minimum 4000 hours salt spray resistance when tested in accordance with ASTMB 117 and minimum 4000 hours humidity resistance when tested in accordance with ASTM D 2247, applied at least 1.2 mils thick.

J. Condenser Fan: Direct-drive, aluminum propeller fan; with permanently lubricated ball bearings, totally enclosed fan cooled motor with thermal-overload protection.

K. Accessories:

1. Cycle Protector: Automatic-reset timer to prevent rapid compressor cycling.

2. Electronic programmable thermostat to control compressor and condenser unit and evaporator fan.

3. Filter-dryer.

4. High-Pressure Switch: Automatic-reset switch cycles compressor off on high refrigerant pressure.

5. Liquid-line solenoid.

6. Low-Pressure Switch: Automatic-reset switch cycles compressor off on low refrigerant pressure.

7. Precharged and insulated suction and liquid tubing.

8. Sound Hood: Wraps around sound attenuation cover for compressor.

9. Thermostatic expansion valve.

10. Time-Delay Relay: Continues operation of evaporator fan after compressor shuts off.

11. Condenser coil hail guard.

2.2 SOURCE QUALITY CONTROL

A. Energy Efficiency:
Equal to or greater than prescribed by ASHRAE/IESNA 90.1, "Energy Efficient Design of New Buildings except Low-Rise Residential Buildings," Section 6, "Heating, Ventilating, and Air Conditioning."

B. Testing Requirements: Factory test sound power level ratings according to ARI 270

PART 3 - EXECUTION

3.1 INSTALLATION

A. Install unit level and plumb, firmly anchored with stainless steel anchor bolts in locations indicated; maintain manufacturer's recommended clearances.

B. Install compressor and condenser units on PE mounting base.

C. Install compressor and condenser units on concrete base. New bases will comply with concrete materials and installation requirements specified in Section 033000 "Cast in Place Concrete."

D. Install roof mounting units on equipment supports specified in Section 077200 "Roof Accessories."

E. Vibration Isolation:
Mount compressor and condenser units on rubber pads with a minimum deflection of 1/4 inch (6.35 mm). Vibration isolation devices and installation requirements are specified in Section 230548 "Vibration and Seismic Controls for HVAC Piping and Equipment."

F. Maintain manufacturer's recommended clearances for service and maintenance.

G. Loose Components: Install electrical components, devices, and accessories that are not factory mounted.

3.2 CONNECTIONS

A. Comply with requirements for p1pmg in Section 232113 "Hydronic Piping." Drawings indicate general arrangement of piping, fittings, and specialties.

B. Where installing piping adjacent to equipment, allow space for service and maintenance of equipment.

3.3 FIELD QUALITY CONTROL

A. Perform tests and inspections.

B. Tests and Inspections:

1. Perform each visual and mechanical inspection and electrical test. Certify compliance with test parameters.

2. Leak Test:
After installation, charge system with refrigerant and oil and test for leaks. Repair leaks replace lost refrigerant and oil, and retest until no leaks exist.

3. Operational Test:
After electrical circuitry has been energized, start units to confirm proper motor operation and unit operation, product capability, and compliance with requirements.

4. Test and adjust controls and safeties. Replace damaged and malfunctioning controls and equipment.

5. Verify proper airflow over coils.

C. Verify that vibration isolation and flexible connections properly dampen vibration transmission to structure.

END OF SECTION

PART 1 - GENERAL

1.1 SUMMARY

A. Section includes split system air conditioning units consisting of separate evaporator fan and compressor condenser components.

1.2 ACTION SUBMITTALS

A. Product Data: For each type of product indicated.

B. Shop Drawings: Include plans, elevations, sections, details, and attachments to other work.

1. Detail equipment assemblies and indicate dimensions, weights, loads, required clearances, method of field assembly, components, and location and size of each field connection.

1.3 INFORMATIONAL SUBMITTALS

A. Warranty: Sample of special warranty.

1.4 CLOSEOUT SUBMITTALS

A. Operation and maintenance data.

1.5 QUALITY ASSURANCE

A. Electrical Components, Devices, and Accessories:
Listed and labeled as defined in NFPA 70, by a qualified testing agency, and marked for intended location and application.

B. ASHRAE Compliance:

1. Fabricate and label refrigeration system to comply with ASHRAE 15, "Safety Standard for Refrigeration Systems."

2. ASHRAE Compliance:
Applicable requirements in ASHRAE 62.1, Section 4 "Outdoor Air Quality," Section 5 "Systems and Equipment," Section 6 "Procedures," and Section 7 "Construction and System Start-up."

C. ASHRAE/IESNA Compliance: Applicable requirements in ASHRAE/IESNA 90.1.

1.6 WARRANTY

A. Special Warranty:
Manufacturer's standard form in which manufacturer agrees to repair or replace components of split system air conditioning units that fail in materials or workmanship within specified warranty period.

1. Warranty Period:

   a. For Compressor: Five year(s) from date of Substantial Completion.

   b. For Parts: One year(s) from date of Substantial Completion.

   c. For Labor: One year(s) from date of Substantial Completion.

PART 2 - PRODUCTS

2.1 MANUFACTURERS

A. Basis of Design Product:
Subject to compliance with requirements, provide product indicated on Drawings or comparable product by one of the following:

1. Carrier Corporation; Home Comfort and HVAC Building & Industrial Systems

2. Daiken Air Conditioning Company

3. Mitsubishi Electric & Electronics USA, Inc.; HVAC Advanced Products Division

4. Trane; a business of American Standard companies

5. YORK; a Johnson Controls company

2.2 OUTDOOR UNITS (5 TONS (18 KW) OR LESS)

A. Air Cooled, Compressor Condenser Components:

1. Casing:
Steel, finished with baked enamel in color selected by Owner's Representative, with removable panels for access to controls, weep holes for water drainage, and mounting holes in base. Provide brass service valves, fittings, and gage ports on exterior of casing.

2. Compressor:
Hermetically sealed with crankcase heater and mounted on vibration isolation device. Compressor motor shall have thermal and current sensitive overload devices, start capacitor, relay, and contactor.

   a. Compressor Type: Scroll.

   b. Two speed compressor motor with manual reset high pressure switch and automatic reset low pressure switch.

   c. Refrigerant Charge: R-410A.

   d. Refrigerant Coil:

Copper tube, with mechanically bonded aluminum fins and liquid sub-cooler. Comply with ARI 210/240. Condenser coils shall be factory coated to prevent salt air corrosion of aluminum, fins. Coating shall be epoxy or phenolic epoxy type rated for minimum 4000 hours salt spray resistance when tested in accordance with ASTMB 117 and minimum 4000 hours humidity resistance when tested in accordance with ASTM D 2247, applied at least 1.2 mils thick.

3. Heat-Pump Components: Reversing valve and low-temperature-air cutoff thermostat

4. Fan: Aluminum-propeller type, directly connected to motor

5. Motor: Permanently lubricated, with integral thermal overload protection.

6. Low Ambient Kit: Permits operation down to 45°F (7°C)

7. Mounting Base: Polyethylene

2.3 ACCESSORIES

A. Thermostat:
Wired infrared functioning in order to remotely control compressor and evaporator fan, with the following features:

1. Compressor time delay.

2. 24-hour time control of system stop and start.

3. Liquid crystal display indicating temperature, set point temperature, time setting, operating mode, and fan speed.

4. Fan-speed selection including auto setting.

B. Automatic-reset timer to prevent rapid cycling of compressor.

C. Refrigerant Line Kits:
Soft annealed copper suction and liquid lines factory cleaned, dried, pressurized, and sealed; factory insulated suction line with flared fittings at both ends.

D. Drain Hose: For condensate.

PART 3 - EXECUTION

3.1 INSTALLATION

A. Install units level and plumb. Anchor to concrete base with stainless steel anchors.

B. Install evaporator fan components using manufacturer's standard mounting devices securely fastened to building structure.

C. Install roof mounted, compressor condenser components on equipment supports specified in Section 07 and Drawings. Anchor units to supports with removable, stainless steel fasteners.

D. Install and connect pre-charged refrigerant tubing to component's quick connect fittings. Install tubing to allow access to unit.

3.2 CONNECTIONS

A. Piping installation requirements are specified in other Sections. Drawings indicate general arrangement of piping, fittings, and specialties.

B. Where piping is installed adjacent to unit, allow space for service and maintenance of unit.

3.3 FIELD QUALITY CONTROL

A. Perform tests and inspections.

1. Manufacturer's Field Service:
Engage a factory authorized service representative to inspect components, assemblies, and equipment installations, including connections, and to assist in testing.

B. Tests and Inspections:

1. Leak Test: After installation, charge system and test for leaks. Repair leaks and retest until no leaks exist.

2. Operational Test: After electrical circuitry has been energized, start units to confirm proper motor rotation and unit operation.

3. Test and adjust controls and safeties. Replace damaged and malfunctioning controls and equipment.

C. Remove and replace malfunctioning units and retest as specified above.

D. Prepare test and inspection reports.

3.4 DEMONSTRATION

A. Train Owner's maintenance personnel to adjust, operate, and maintain units.

END OF SECTION

PART 1 - GENERAL

1.1 RELATED DOCUMENTS

A. Drawings and general provisions of the Contract, including General and Supplementary Conditions and Division I Specification Sections, apply to this Section.

1.2 SUMMARY

A. This Section includes the following electrical materials and methods:

1. Supporting devices for electrical components

2. Electrical Identification

3. Touchup painting

1.3 SUBMITTALS

A. General:
Submit each item in this Article according to the Conditions of the Contract and Division 1 Specification Sections.

B. Product Data for each type of product specified.

C. Samples of color, lettering style, and other graphic representation required for each identification product for Project.

1.4 QUALITY ASSURANCE

A. Comply with NFPA 70 for components and installation.

B. Listing and Labeling:
Provide products specified in this Section that are listed and labeled.

1. The Terms "Listed and Labeled":
As defined in the National Electrical Code, Article 100.

2. Listing and Labeling Agency Qualifications A "Nationally Recognized Testing Laboratory" (NRTL) as defined in OSHA Regulation 1910.7.

1.5 SEQUENCING AND SCHEDULING

A. Coordinate electrical equipment installation with other building components.

B. Arrange for chases, slots, and openings in building structure during progress of construction to allow for electrical installations.

C. Coordinate installing required supporting devices and set sleeves in poured in place concrete and other structural components as they are constructed.

D. Sequence, coordinate, and integrate installing electrical materials and equipment for efficient flow of the Work.

E. Coordinate connecting electrical service to components furnished under other Sections. Refer to Division 15.

F. Coordinate requirements for access panels and doors where electrical items requiring access are concealed by finished surfaces. Access panels and doors are specified in Division 8 Section "Access Doors."

G. Coordinate installing electrical identification after completion of finishing where identification is applied to field finished surfaces.

PART 2 - PRODUCTS

2.1 SUPPORTING DEVICES

A. Channel and angle support systems, hangers, anchors, sleeves, brackets, fabricated items, and fasteners are designed to provide secure support from the building structure for electrical components.

1. Material: Stainless steel, except as otherwise indicated

2. Metal Items for Use Outdoors or in Damp Locations: Stainless steel, except as otherwise indicated

B. Steel channel supports have 9/16-inch (14-mm) diameter holes at a maximum of 8 inches (203 mm) O.C., in at least 1 surface.

1. Fittings and accessories mate and match with channels and are from the same manufacturer.

C. Nonmetallic Channel and Angle Systems:
Structural grade, factory formed, fiberglass resin channels and angles with 9/16-inch (14-mm) diameter holes at a maximum of 8 inches (203 mm) O.C., in at least 1 surface.

1. Fittings and accessories mate and match with channels or angles and are from the same manufacturer.

2. Fitting and Accessory Material:
Same as channels and angles, except metal items may be stainless steel.

D. Raceway and Cable Supports:
Manufactured clevis hangers, riser clamps, straps, threaded C-clamps with retainers, ceiling trapeze hangers, wall brackets, and spring steel clamps or "click" type hangers.

E. Cable Supports for Vertical Conduit:
Factory fabricated assembly consisting of threaded body and insulating wedging plug for non-armored electrical cables in riser conduits. Plugs have number and size of conductor gripping holes as required to suit individual risers. Body constructed of malleable iron casting with hot dip galvanized finish.

F. Expansion Anchors: Carbon-steel wedge or sleeve type.

G. Toggle Bolts: All-steel springhead type.

H. Powder-Driven Threaded Studs: Heat-treated steel.

2.2 ELECTRICAL IDENTIFICATION

A. Manufacturer's Standard Products:
Where more than one type is listed for a specified application, selection is Installer's option, but provide single type for each application category. Use colors prescribed by ANSI A13.1, NFPA 70, and these Specifications.

B. Raceway and Cable Labels:
Conform to ANSI Al3.1, Table 3, for minimum size of letters for legend and minimum length of color field for each raceway or cable size.

1. Type:
Preprinted, flexible, self-adhesive, vinyl. Legend is over-laminated with a clear, weather and chemical resistant coating.

2. Color: Black legend on orange field

3. Legend: Indicates voltage

C. Colored Adhesive Marking Tape for Raceways, Wires, and Cables:
Self-adhesive vinyl tape not less than 3 mils thick by 1 inch wide (0.08 mm thick by 25 mm wide)

D. Engraved, Plastic Laminated Labels, Signs, and Instruction Plates:
Engraving stock, melamine plastic laminate punched for mechanical fasteners 1/16-inch (1.6-mm) minimum thick for signs up to 20 sq. in. (129 sq. em), 1/8 inch (3.2 mm) thick for larger sizes. Engraved legend in black letters on white face.

E. Interior Warning and Caution Signs:
Preprinted, aluminum, baked enamel finish signs, punched for fasteners, with colors, legend, and size appropriate to the application.

F. Fasteners for Plastic Laminated and Metal Signs:
Self-tapping stainless-steel screws or No. 10/32 stainless steel machine screws with nuts and flat and lock washers.

2.3 TOUCHUP PAINT

A. For Equipment: Provided by equipment manufacturer and selected to match equipment finish.

B. For Non-Equipment Surfaces: Matching type and color of undamaged, existing adjacent finish.

C. For Galvanized Surfaces: Zinc-rich paint recommended by item manufacturer.

PART 3 - EXECUTION

3.1 EQUIPMENT INSTALLATION REQUIREMENTS

A. Install components and equipment to provide the maximum possible headroom where mounting heights or other location criteria are not indicated.

B. Install items level, plumb, and parallel and perpendicular to other building systems and components. Install equipment to facilitate service, maintenance, and repair or replacement of components.

C. Connect for ease of disconnecting, with minimum interference with other installations.

D. Give right of way to raceways and piping systems installed at a required slope.

3.2 ELECTRICAL SUPPORTING METHODS

A. Damp Locations and Outdoors: Stainless steel materials or nonmetallic, U-channel system components.

B. Dry Locations: Steel materials.

C. Support Clamps for PVC Raceways: Click type clamp system.

D. Conform to manufacturer's recommendations for selecting supports.

E. Strength of Supports:
Adequate to carry all present and future loads, times a safety factor of at least 4; 200-lb (90-kg) minimum design load.

3.3 INSTALLATION

A. Install wires in raceway according to manufacturer's written instructions and NECA's "Standard of Installation."

B. Conductor Splices:
Keep to the minimum and comply with the following:

1. Install splices and taps that possess equivalent or better mechanical strength and insulation ratings than un-spliced conductors.

2. Use splice and tap connectors that are compatible with conductor material.

C. Connect outlets and components to wiring systems and to ground as indicated and instructed by manufacturer. Tighten connectors and terminals, including screws and bolts, according to equipment manufacturer's published torque tightening values for equipment connectors. Where manufacturer's torqueing requirements are not indicated, tighten connectors and terminals according to tightening requirements specified in UL 486A.

D. Install devices to securely and permanently fasten and support electrical components.

E. Raceway Supports:
Comply with NFPA 70 and the following requirements:

1. Conform to manufacturer's recommendations for selecting and installing supports.

2. Install individual and multiple raceway hangers and riser clamps to support raceways. Provide U bolts, clamps, attachments, and other hardware necessary for hanger assembly and for securing hanger rods and conduits.

3. Support parallel runs of horizontal raceways together on trapeze- or bracket-type hangers.

4. Spare Capacity:
Size supports for multiple conduits so capacity can be increased by a 25 percent minimum in the future.

5. Support individual horizontal raceways with separate, malleable iron pipe hangers or clamps.

6. Hanger Rods: 1/4-inch (6-mm) diameter or larger threaded steel, except as otherwise indicated.

7. Spring Steel Fasteners:
Specifically designed for supporting single conduits or tubing. May be used in lieu of malleable iron hangers for I-I/2-inch (38-mm) and smaller raceways serving lighting and receptacle branch circuits above suspended ceilings and for fastening raceways to channel and slotted angle supports.

8. In vertical runs, arrange support so the load produced by the weight of the raceway and the enclosed conductors is carried entirely by the conduit supports, with no weight load on raceway terminals.

F. Vertical Conductor Supports: Install simultaneously with conductors.

G. Miscellaneous Supports:

Install metal channel racks for mounting cabinets, panelboards, disconnects, control enclosures, pull boxes, junction boxes, transformers, and other devices except where components are mounted directly to structural features of adequate strength.

H. In open overhead spaces, cast boxes threaded to raceways need not be separately supported, except where used for fixture support; support sheet-metal boxes directly from the building structure or by bar hangers. Where bar hangers are used, attach the bar to raceways on opposite sides of the box and support the raceway with an approved fastener not more than 24 inches (610 mm) from the box.

I. Fire stopping:
Apply to cable and raceway penetrations of fire-rated floor and wall assemblies. Perform fire stopping as specified in Division 7 Section "Fire stopping" to reestablish the original fire resistance rating of the assembly at the penetration.

J. Fastening:
Unless otherwise indicated, securely fasten electrical items and their supporting hardware to the building structure. Perform fastening according to the following:

1. Fasten by means of wood screws or screw-type nails on wood; toggle bolts on hollow masonry units; concrete inserts or expansion bolts on concrete or solid masonry; and by machine screws, welded threaded studs," or spring tension clamps on steel.

2. Threaded studs driven by a powder charge and provided with lock washers and nuts may be used instead of expansion bolts, machine screws, or wood screws.

3. Welding to steel structure may be used only for threaded studs, not for conduits, pipe straps, or any other items.

4. In partitions of light steel construction use sheet-metal screws.

5. Select fasteners so the load applied to any fastener does not exceed 25 percent of the proof test load.

K. Install identification devices where required.

1. Install labels where indicated and at locations for best convenience of viewing without interference with operation and maintenance of equipment.

2. Coordinate names, abbreviations, colors, and other designations used for electrical identification with corresponding designations indicated on the Contract Documents or required by codes and standards. Use consistent designations throughout the Project.

3. Self-Adhesive Identification Products: Clean surfaces of dust, loose material, and oily films before applying.

4. Identify raceways and cables of certain systems with color banding as follows:

a. Bands:
Colored adhesive marking tape. Make each color band 2 inches (51 mm) wide, completely encircling conduit, and place adjacent bands of 2-color markings in contact, side by side.

b. Locate bands at changes in direction, at penetrations of walls and floors, at 50-foot (15-m) maximum intervals in straight runs, and at 25 feet (8 m) in congested areas.

c. Colors: As follows:

i. Fire-Alarm System: Red.

ii. Security System: Blue and yellow.

iii. Telecommunications System: Green and yellow.

5. Tag or label power circuits for future connection and circuits in raceways and enclosures with other circuits. Identify source and circuit numbers in each cabinet, pull box, junction box, and outlet box. Color coding may be used for voltage and phase indication.

3.4 TOUCHUP PAINTING

A. Thoroughly clean damaged areas and provide primer, intermediate, and finish coats to suit the degree of damage at each location.

B. Follow paint manufacturer's written instructions for surface preparation and for timing and application of successive coats.

END OF SECTION

PART 1 - GENERAL

1.1 SUMMARY

A. Section Includes:

1. Sleeves for raceways and cables
2. Sleeve seals
3. Grout
4. Common electrical installation requirements

1.2 SUBMITTALS

A. Product Data: For sleeve seals

PART 2 - PRODUCTS

2.1 SLEEVES FOR RACEWAYS AND CABLES

A. Steel Pipe Sleeves: ASTM A 53/A 53M, Type E, Grade B, Schedule 40, galvanized steel, plain ends

B. Cast Iron Pipe Sleeves:
Cast or fabricated "wall pipe," equivalent to ductile iron pressure pipe, with plain ends and integral water stop, unless otherwise indicated.

C. Sleeves for Rectangular Openings: Galvanized sheet steel

1. Minimum Metal Thickness:

a. For sleeve cross section rectangle perimeter less than 50 inches (1270 mm) and no side more than 16 inches (400 mm), thickness shall be 0.052 inch (1.3 mm).

b. For sleeve cross section rectangle perimeter equal to, or more than, 50 inches (1270 mm) and 1 or more sides equal to, or more than, 16 inches (400 mm), thickness shall be 0.138 inch (3.5 mm).

2.2 SLEEVE SEALS

A. Description:
Modular sealing device, designed for field assembly, to fill annular space between sleeve and raceway or cable.

1. Manufacturers: Subject to compliance with requirements
2. Basis of Design Product:

Subject to compliance with requirements, provide or comparable product by one of the following:

a. Advance Products & Systems, Inc.

b. Calpico, Inc.

c. Metraflex Co.

d. Pipeline Seal and Insulator, Inc.

3. Sealing Elements:
EPDM, NBR interlocking links shaped to fit surface of cable or conduit. Include type and number required for material and size of raceway or cable.

4. Pressure Plates:
Stainless steel. Include two for each sealing element.

5. Connecting Bolts and Nuts:
Stainless steel of length required to secure pressure plates to sealing elements. Include one for each sealing element.

2.3 GROUT

A. Nonmetallic, Shrinkage Resistant Grout:
ASTM C 1107, factory packaged, nonmetallic aggregate grout, noncorrosive, no staining, mixed with water to consistency suitable for application and a 30-minute working time.

PART 3 - EXECUTION

3.4 COMMON REQUIREMENTS FOR ELECTRICAL INSTALLATION

A. Comply with NECA l.

B. Measure indicated mounting heights to bottom of unit for suspended items and to center of unit for wall mounting items.

C. Headroom Maintenance:
If mounting heights or other location criteria are not indicated, arrange and install components and equipment to provide maximum possible headroom consistent with these requirements.

D. Equipment:
Install to facilitate service, maintenance, and repair or replacement of components of both electrical equipment and other nearby installations. Connect in such a way as to facilitate future disconnecting with minimum interference with other items in the vicinity.

E. Right of Way:
Give to piping systems installed at a required slope.

3.2 SLEEVE INSTALLATION FOR ELECTRICAL PENETRATIONS

A. Electrical penetrations occur when raceways, cables, wire ways, cable trays, or busways penetrate concrete slabs, concrete or masonry walls, or fire-rated floor and wall assemblies.

B. Concrete Slabs and Walls:
Install sleeves for penetrations unless core drilled holes or formed openings are used. Install sleeves during erection of slabs and walls.

C. Use pipe sleeves unless penetration arrangement requires rectangular sleeved opening.

D. Cut sleeves to length for mounting flush with both surfaces of walls.

E. Extend sleeves installed in floors 2 inches (50 mm) above finished floor level.

F. Size pipe sleeves to provide l/4-inch (6.4-mm) annular clear space between sleeve and raceway or cable, unless indicated otherwise.

G. Seal space outside of sleeves with grout for penetrations of concrete and masonry.

1. Promptly pack grout solidly between sleeve and wall so no voids remain. Tool exposed surfaces smooth; protect grout while curing.

H. Interior Penetrations of Non-Fire Rated Walls and Floors:
Seal annular space between sleeve and raceway or cable, using joint sealant appropriate for size, depth, and location of joint. Comply with requirements in Division 07 Section "Joint Sealants."

I. Aboveground, Exterior Wall Penetrations:
Seal penetrations using steel pipe sleeves and mechanical sleeve seals. Select sleeve size to allow for l-inch (25-mm) annular clear space between pipe and sleeve for installing mechanical sleeve seals.

3.3 SLEEVE-SEAL INSTALLATION

A. Install to seal exterior wall penetrations.

B. Use type and number of sealing elements recommended by manufacturer for raceway or cable material and size. Position raceway or cable in center of sleeve. Assemble mechanical sleeve seals and install in annular space between raceway or cable and sleeve. Tighten bolts against pressure plates that cause sealing elements to expand and make watertight seal.

END OF SECTION

PART 1 - GENERAL

1.1 SUMMARY

A. This Section includes the following:

1. Building wires and cables rated 600 V and less

2. Connectors, splices, and terminations rated 600 V and less

3. Sleeves and sleeve seals for cables

1.2 SUBMITTALS

A. Product Data:
For each type of product indicated.

B. Field quality control test reports.

1.3 QUALITY ASSURANCE

A. Electrical Components, Devices, and Accessories:
Listed and labeled as defined in NFPA 70, Article 100, by a testing agency acceptable to authorities having jurisdiction, and marked for intended use.

B. Comply with NFPA 70.

PART 2 - PRODUCTS

2.1 CONDUCTORS AND CABLES

A. Copper Conductors: Comply with NEMA WC 70.

B. Conductor Insulation: Comply with NEMA WC 70 for Types THW and THHN-THWN.

2.2 CONNECTORS AND SPLICES

A. Available Manufacturers:
Subject to compliance with requirements, manufacturers offering products that may be incorporated into the Work include, but are not limited to, the following:

1. AFC Cable Systems, Inc.

2. Hubbell Power Systems, Inc.

3. 0-ZJGedney; EGS Electrical Group LLC

4. 3M; Electrical Products Division

5. Tyco Electronics Corp.

B. Description:
Factory-fabricated connectors and splices of size, ampacity rating, material, type, and class for application and service indicated.

2.3 SLEEVES FOR CABLES

A. Steel Pipe Sleeves: ASTM A 53/A 53M, Type E, Grade B, Schedule 40, galvanized steel, plain ends.

B. Coordinate sleeve selection and application with selection and application of fire stopping specified in Division 07 Section "Penetration Fire stopping."

2.4 SLEEVE SEALS

A. Basis of Design Product:
Subject to compliance with requirements, provide or a comparable product by one of the following:

1. Advance Products & Systems, Inc.

2. Calpico, Inc.

3. Metraflex Co.

4. Pipeline Seal and Insulator, Inc.

5. Hilti, Inc.

B. Description:
Modular sealing device, designed for field assembly, to fill annular space between sleeve and cable.

1. Sealing Elements:
EPDM, NBR interlocking links shaped to fit surface of cable or conduit. Include type and number required for material and size of raceway or cable.

2. Pressure Plates: Stainless steel. Include two for each sealing element.

3. Connecting Bolts and Nuts:
Stainless steel of length required to secure pressure plates to sealing elements. Include one for each sealing element.

PART 3 - EXECUTION

3.1 CONDUCTOR MATERIAL APPLICATIONS

A. Feeders: Copper. Solid for No. 10 AWG and smaller; stranded for No. 8 AWG and larger.

B. Branch Circuits: Copper. Solid for No. 10 AWG and smaller; stranded for No. 8 AWG and larger.

3.2 CONDUCTOR INSULATION AND MULTICONDUCTOR CABLE APPLICATIONS AND WIRING METHODS

A. Service Entrance: Type THW, single conductors in raceway

B. Feeders Concealed in Ceilings, Walls, Partitions, and Crawlspaces: Type THHN-THWN, single conductors in raceway

C. Branch Circuits Concealed in Ceilings, Walls, and Partitions: Type THHN-THWN, single conductors in raceway.

3.3 INSTALLATION OF CONDUCTORS AND CABLES

A. Conceal cables in finished walls, ceilings, and floors, unless otherwise indicated.

B. Use manufacturer approved pulling compound or lubricant where necessary; compound used must not deteriorate conductor or insulation. Do not exceed manufacturer's recommended maximum pulling tensions and sidewall pressure values.

C. Use pulling means, including fish tape, cable, rope, and basket weave wire/cable grips that will not damage cables or raceway.

D. Support cables according to Division 26 Sections "Hangers and Supports for Electrical Systems."

E. Identify and color code conductors and cables according to Division 26 Section "Identification for Electrical Systems."

F. Tighten electrical connectors and terminals according to manufacturer's published torque tightening values. If manufacturer's torque values are not indicated, use those specified in UL 486A and UL 486B.

G. Make splices and taps that are compatible with conductor material and that possess equivalent or better mechanical strength and insulation ratings than un-spliced conductors.

H. Use oxide inhibitor in each splice and tap conductor for aluminum conductors.

I. Wiring at Outlets: Install conductor at each outlet, with at least 12 inches (300 mm) of slack.

3.4 FIRESTOPPING

A. Apply fire stopping to electrical penetrations of fire rated floor and wall assemblies to restore original fire resistance rating of assembly according to Division 07 Section "Penetration Fire stopping."

3.5 FIELD QUALITY CONTROL

A. Perform tests and inspections and prepare test reports.

B. Tests and Inspections:

1. After installing conductors and cables and before electrical circuitry has been energized, test service entrance and feeder conductors for compliance with requirements.

2. Perform each visual and mechanical inspection and electrical test stated in NETA Acceptance Testing Specification. Certify compliance with test parameters.

3. Infrared Scanning:
After Substantial Completion, but not more than 60 days after Final Acceptance, perform an infrared scan of each splice in cables and conductors No. 3 AWG and larger. Remove box and equipment covers so splices are accessible to portable scanner.

a. Follow up Infrared Scanning:
Perform an additional follow-up infrared scan of each splice 11 months after date of Substantial Completion.

b. Instrument:
Use an infrared scanning device designed to measure temperature or to detect significant deviations from normal values. Provide calibration record for device.

c. Record of Infrared Scanning:
Prepare a certified report that identifies splices checked and that describes scanning results. Include notation of deficiencies detected, remedial action taken, and observations after remedial action.

C. Test Reports: Prepare a written report to record the following:

1. Test procedures used

2. Test results that comply with requirements

3. Test results that do not comply with requirements and corrective action taken to achieve compliance with requirements.

D. Remove and replace malfunctioning units and retest as specified above.

END OF SECTION

PART 1 - GENERAL

1.1 SUMMARY

A. This Section includes methods and materials for grounding systems and equipment.

1.2 SUBMITTALS

A. Product Data: For each type of product indicated.

B. Field quality-control test reports.

1.3 QUALITY ASSURANCE

A. Electrical Components, Devices, and Accessories:
Listed and labeled as defined in NFPA 70, Article 100, by a testing agency acceptable to authorities having jurisdiction, and marked for intended use.

B. Comply with UL 467 for grounding and bonding materials and equipment.

PART 2 - PRODUCTS

2.1 CONDUCTORS

A. Insulated Conductors:
Copper wire or cable insulated for 600 V unless otherwise required by applicable Code or authorities having jurisdiction.

B. Bare Copper Conductors:

1. Solid Conductors: ASTM B 3

2. Stranded Conductors: ASTM B 8

3. Tinned Conductors: ASTM B 33

4. Bonding Cable: 28 kcmil, 14 strands of No. 17 AWG conductor, 1/4 inch (6 mm) in diameter

5. Bonding Conductor: No. 4 or No. 6 AWG, stranded conductor

6. Bonding Jumper:
Copper tape, braided conductors, terminated with copper ferrules; 1-5/8 inches (41 mm) wide and 1/16 inch (1.6 mm) thick.

7. Tinned Bonding Jumper:
Tinned copper tape, braided conductors, terminated with copper ferrules; 1-5/8 inches (41 mm) wide and 1/16 inch (1.6 mm) thick.

2.2 CONNECTORS

A. Listed and labeled by a nationally recognized testing laboratory acceptable to authorities having jurisdiction for applications in which used, and for specific types, sizes, and combinations of conductors and other items connected.

B. Bolted Connectors for Conductors and Pipes: Copper or copper alloy, bolted pressure type, with at least two bolts

1. Pipe Connectors: Clamp type, sized for pipe.

C. Welded Connectors:
Exothermic welding kits of types recommended by kit manufacturer for materials being joined and installation conditions.

2.3 GROUNDING ELECTRODES

A. Ground Rods: Copper clad steel; 3/4-inch by10 feet (19 mm by 3 m) in diameter

PART 3 - EXECUTION

3.1 APPLICATIONS

A. Conductors:
Install solid conductor for No. 8 AWG and smaller, and stranded conductors for No. 6 AWG and larger, unless otherwise indicated.

B. Underground Grounding Conductors:
Install bare copper conductor, No. 2/0 AWG minimum. Bury at least 24 inches (600 mm) below grade.

C. Isolated Grounding Conductors:
Green colored insulation with continuous yellow stripe. On feeders with isolated ground, identify grounding conductor where visible to normal inspection, with alternating bands of green and yellow tape, with at least three bands of green and two bands of yellow.

D. Conductor Terminations and Connections:

1. Pipe and Equipment Grounding Conductor Terminations:

2. Bolted connectors

3. Underground Connections: Welded connectors except at test wells and as otherwise indicated.

4. Connections to Ground Rods at Test Wells: Bolted connectors

5. Connections to Structural Steel: Welded connectors

3.2 EQUIPMENT GROUNDING

A. Install insulated equipment grounding conductors with the following items, in addition to those required by NFPA 70:

1. Feeders and branch circuits

2. Lighting circuits

3. Receptacle circuits

4. Single phase motor and appliance branch circuits

5. Three phase motor and appliance branch circuits

6. Flexible raceway runs

7. Armored and metal-clad cable runs

8. Busway Supply Circuits:

9. Install insulated equipment grounding conductor from grounding bus in the switchgear, switchboard, or distribution panel to equipment grounding bar terminal on bus way.

10. Computer and Rack Mounted Electronic Equipment Circuits:
Install insulated equipment grounding conductor in branch circuit runs from equipment area power panels and power distribution units.

B. Air Duct Equipment Circuits:
Install insulated equipment grounding conductor to duct mounted electrical devices operating at 120 V and more, including air cleaners, heaters, dampers, humidifiers, and other duct electrical equipment. Bond conductor to each unit and to air duct and connected metallic piping.

C. Water Heater and Heat Tracing Cables:
Install a separate insulated equipment grounding conductor to each electric water heater and heat-tracing cable. Bond conductor to heater units, piping, connected equipment, and components.

D. Isolated Grounding Receptacle Circuits:
Install an insulated equipment grounding conductor connected to the receptacle grounding terminal. Isolate conductor from raceway and from panelboard grounding terminals. Terminate at equipment grounding conductor terminal of the applicable derived system or service, unless otherwise indicated.

E. Isolated Equipment Enclosure Circuits:
For designated equipment supplied by a branch circuit or feeder, isolate equipment enclosure from supply circuit raceway with a nonmetallic raceway fitting listed for the purpose. Install fitting where raceway enters enclosure and install a separate insulated equipment grounding conductor. Isolate conductor from raceway and from panelboard grounding terminals. Terminate at equipment grounding conductor terminal of the applicable derived system or service, unless otherwise indicated.

F. Signal and Communication Equipment:
For telephone, alarm, voice and data, and other communication equipment, provide No. 4 AWG minimum insulated grounding conductor in raceway from grounding electrode system to each service location, terminal cabinet, wiring closet, and central equipment location.

1. Service and Central Equipment Locations and Wiring Closets:
Terminate grounding conductor on a 1/4-by-2-by-12-inch (6-by-50-by-300-mm) grounding bus.

2. Terminal Cabinets:
Terminate grounding conductor on cabinet grounding terminal.

3. Metal Poles Supporting Outdoor Lighting Fixtures:
Install grounding electrode and a separate insulated equipment grounding conductor in addition to grounding conductor installed with branch circuit conductors.

3.3 INSTALLATION

A. Grounding Conductors:
Route along shortest and straightest paths possible, unless otherwise indicated or required by Code. Avoid obstructing access or placing conductors where they may be subjected to strain, impact, or damage.

B. Ground Rods:
Drive rods until tops are 2 inches (50 mm) below finished floor or final grade, unless otherwise indicated.

1. Interconnect ground rods with grounding electrode conductor below grade and as otherwise indicated. Make connections without exposing steel or damaging coating, if any.

2. For grounding electrode system, install at least three rods spaced at least one-rod length from each other and located at least the same distance from other grounding electrodes, and connect to the service grounding electrode conductor.

C. Bonding Straps and Jumpers:
Install in locations accessible for inspection and maintenance, except where routed through short lengths of conduit.

1. Bonding to Structure: Bond straps directly to basic structure, taking care not to penetrate any adjacent parts.

2. Bonding to Equipment Mounted on Vibration Isolation Hangers and Supports: Install so vibration is not transmitted to rigidly mounted equipment.

3. Use exothermic-welded connectors for outdoor locations, but if a disconnect type connection is required, use a bolted clamp.

D. Grounding and Bonding for Piping:

1. Metal Water Service Pipe:
Install insulated copper grounding conductors, in conduit, from building's main service equipment, or grounding bus, to main metal water service entrances to building. Connect grounding conductors to main metal water service pipes, using a bolted clamp connector or by bolting a lug-type connector to a pipe flange, using one of the lug bolts of the flange. Where a dielectric main water fitting is installed, connect grounding conductor on street side of fitting. Bond metal grounding conductor conduit or sleeve to conductor at each end.

2. Water Meter Piping:
Use braided type bonding jumpers to electrically bypass water meters. Connect to pipe with a bolted connector.

3. Bond each above ground portion of gas piping system downstream from equipment shutoff valve.

E. Bonding Interior Metal Ducts:
Bond metal air ducts to equipment grounding conductors of associated fans, blowers, electric heaters, and air cleaners. Install bonding jumper to bond across flexible duct connections to achieve continuity.

3.4 FIELD QUALITY CONTROL

A. Testing Agency:
Engage a qualified testing and inspecting agency to perform the following field tests and inspections and prepare test reports.

B. Perform the following tests and inspections and prepare test reports:

1. After installing grounding system but before permanent electrical circuits have been energized, test for compliance with requirements.

2. Test completed grounding system at each location where a maximum ground resistance level is specified, at service disconnect enclosure grounding terminal, and at ground test wells.

a. Measure ground resistance not less than two full days after last trace of precipitation and without soil being moistened by any means other than natural drainage or seepage and without chemical treatment or other artificial means of reducing natural ground resistance.

b. Perform tests by fall of potential method according to IEEE 81.

C. Report measured ground resistances that exceed the following values:

1. Power and Lighting Equipment or System with Capacity 500 kVA and Less: 5 ohms

2. Power and Lighting Equipment or System with Capacity 500 to 1000 kVA: 3 ohms

3. Power and Lighting Equipment or System with Capacity More Than I000 kVA: 3 ohms

4. Power Distribution Units or Panelboards Serving Electronic Equipment: 2 ohm(s)

D. Excessive Ground Resistance:
If resistance to ground exceeds specified values, notify Owner's Representative promptly and include recommendations to reduce ground resistance.

END OF SECTION

PART 1 - GENERAL

1.1 SUMMARY

A. Section includes:

1. Hangers and supports for electrical equipment and systems.

2. Construction requirements for concrete bases.

1.2 PERFORMANCE REQUIREMENTS

A. Delegated Design:
Design supports for multiple raceways, including comprehensive engineering analysis by a qualified professional engineer, using performance requirements and design criteria indicated.

B. Design supports for multiple raceways capable of supporting combined weight of supported systems and its contents.

C. Design equipment supports capable of supporting combined operating weight of supported equipment and connected systems and components.

D. Rated Strength:
Adequate in tension, shear, and pullout force to resist maximum loads calculated or imposed for this Project, with a minimum structural safety factor of five times the applied force.

1.3 SUBMITTALS

A. Product Data: For steel slotted support systems

B. Shop Drawings: Show fabrication and installation details and include calculations for the following:

1. Trapeze hangers. Include Product Data for components.

2. Steel slotted channel systems. Include Product Data for components.

3. Equipment supports

C. Welding certificates

1.4 QUALITY ASSURANCE

A. Comply with NFPA 70.

PART 2 - PRODUCTS

2.1 SUPPORT, ANCHORAGE, AND ATTACHMENT COMPONENTS

A. Steel Slotted Support Systems: Comply with MFMA-4, factory fabricated components for field assembly.

1. Manufacturers: Subject to compliance with requirements, provide products by one of the following:

   a. Allied Tube & Conduit

   b. Cooper B-Line, Inc.; a division of Cooper Industries

   c. ERICO International Corporation

   d. GS Metals Corp.

   e. Thomas & Betts Corporation

   f. Unistrut; Tyco International, Ltd.

   g. Wesanco, Inc.

2. Metallic Coatings: Hot-dip galvanized after fabrication and applied according to MFMA-4.

3. Nonmetallic Coatings: Manufacturer's standard PVC, polyurethane, or polyester coating applied according to MFMA-4.

4. Painted Coatings: Manufacturer's standard painted coating applied according to MFMA-4.

5. Channel Dimensions: Selected for applicable load criteria.

B. Raceway and Cable Supports: As described in NECA 1 and NECA 101.

C. Conduit and Cable Support Devices:
Steel hangers, clamps, and associated fittings designed for types and sizes of raceway or cable to be supported.

D. Support for Conductors in Vertical Conduit:
Factory fabricated assembly consisting of threaded body and insulating wedging plug or plugs for non-armored electrical conductors or cables in riser conduits. Plugs shall have number, size, and shape of conductor gripping pieces as required to suit individual conductors or cables supported. Body shall be malleable iron.

E. Structural Steel for Fabricated Supports and Restraints: ASTM A 36/A 36M, steel plates, shapes, and bars; black and galvanized.

F. Mounting, Anchoring, and Attachment Components: Items for fastening electrical items or their supports to building surfaces include the following:

1. Powder-Actuated Fasteners:

Threaded steel stud, for use in hardened Portland cement concrete, steel, or wood, with tension, shear, and pullout capacities appropriate for supported loads and building materials where used.

a. Manufacturers: Subject to compliance with requirements, provide products by one of the following:

i. Hilti, Inc.

ii. ITW Ramset/Red Head; a division of Illinois Tool Works, Inc.

iii. MKT Fastening, LLC

iv. Simpson Strong-Tie Co., Inc.; Masterset Fastening Systems Unit

2. Mechanical Expansion Anchors:
Insert wedge type, stainless steel, for use in hardened Portland cement concrete with tension, shear, and pullout capacities appropriate for supported loads and building materials in which used.

a. Manufacturers: Subject to compliance with requirements, provide products by one of the following:

i. Cooper B-Line, Inc.; a division of Cooper Industries.

ii. Empire Tool and Manufacturing Co., Inc.

iii. Hilti, Inc.

iv. ITW Ramset/Red Head; a division of Illinois Tool Works, Inc.

v. MKT Fastening, LLC.

2.2 FABRICATED METAL EQUIPMENT SUPPORT ASSEMBLIES

A. Materials: Comply with requirements in Division 05 Section "Metal Fabrications" for steel shapes and plates.

PART 3 - EXECUTION

3.1 APPLICATION

A. Comply with NECA I and NECA 101 for application of hangers and supports for electrical equipment and systems except if requirements in this Section are stricter.

B. Maximum Support Spacing and Minimum Hanger Rod Size for Raceway:
Space supports for EMT and IMC, as required by NFPA 70. Minimum rod size shall be 1/4 inch (6 mm) in diameter.

C. Multiple Raceways or Cables:

Install trapeze type supports fabricated with steel slotted support system, sized so capacity can be increased by at least 25 percent in future without exceeding specified design load limits.

1. Secure raceways and cables to these supports with two-bolt conduit clamps.

D. Spring steel clamps designed for supporting single conduits without bolts may be used for 1-1/2 inch (38 mm) and smaller raceways serving branch circuits and communication systems above suspended ceilings and for fastening raceways to trapeze supports.

3.2 SUPPORT INSTALLATION

A. Comply with NECA 1 and NECA 101 for installation requirements except as specified in this Article.

B. Raceway Support Methods:
In addition to methods described in NECA I, EMT and IMC may be supported by openings through structure members, as permitted in NFPA 70.

C. Strength of Support Assemblies:
Where not indicated, select sizes of components so strength will be adequate to carry present and future static loads within specified loading limits. Minimum static design load used for strength determination shall be weight of supported components plus 200 lb (90 kg).

D. Mounting and Anchorage of Surface Mounted Equipment and Components:
Anchor and fasten electrical items and their supports to building structural elements by the following methods unless otherwise indicated by code:

1. To Wood: Fasten with lag screws or through bolts

2. To Masonry: Approved toggle type bolts on hollow masonry units and expansion anchor fasteners on solid masonry units.

3. To Existing Concrete: Expansion anchor fasteners

4. Instead of expansion anchors, powder actuated driven threaded studs provided with lock washers and nuts may be used in existing standard weight concrete, 4 inches (100 mm) thick or greater. Do not use for anchorage to lightweight-aggregate concrete or for slabs less than 4 inches (100 mm) thick.

5. To Light Steel: Sheet metal screws

6. Items Mounted on Hollow Walls and Nonstructural Building Surfaces:
Mount cabinets, panelboards, disconnect switches, control enclosures, pull and junction boxes, transformers, and other devices on slotted channel racks attached to substrate.

E. Drill holes for expansion anchors in concrete at locations and to depths that avoid reinforcing bars.

3.3 INSTALLATION OF FABRICATED METAL SUPPORTS

A. Comply with installation requirements in Division 05 Section "Metal Fabrications" for site fabricated metal supports.

B. Cut, fit, and place miscellaneous metal supports accurately in location, alignment, and elevation to support and anchor electrical materials and equipment.

3.4 CONCRETE BASES

A. Construct concrete bases of dimensions indicated but not less than 4 inches (100 mm) larger in both directions than supported unit, and so anchors will be a minimum of 10 bolt diameters from edge of the base.

B. Use 4000-psi (27.6-MPa), 28-day compressive strength concrete. Concrete materials, reinforcement, and placement requirements are specified in Division 03 Section "Cast-in-Place Concrete."

C. Anchor equipment to concrete base.

1. Place and secure anchorage devices. Use supported equipment manufacturer's setting drawings, templates, diagrams, instructions, and directions furnished with items to be embedded.

2. Install anchor bolts to elevations required for proper attachment to supported equipment.

3. Install anchor bolts according to anchor bolt manufacturer's written instructions.

3.5 PAINTING

A. Touchup:
Clean field welds and abraded areas of shop paint. Paint exposed areas immediately after erecting hangers and supports. Use same materials as used for shop painting. Comply with SSPC-PA 1 requirements for touching up field painted surfaces.

1. Apply paint by brush or spray to provide minimum dry film thickness of 2.0 mils (0.05 mm).

B. Touchup:
Comply with requirements in Division 09 Painting Sections for cleaning and touchup painting of field welds, bolted connections, and abraded areas of shop paint on miscellaneous metal.

C. Galvanized Surfaces:
Clean welds, bolted connections, and abraded areas and apply galvanizing repair paint to comply with ASTM A 780.

END OF SECTION

PART 1 - GENERAL

1.1 SUMMARY

A. This Section includes raceways, fittings, boxes, enclosures, and cabinets for electrical wiring.

B. See Division 26 Section "Underground Ducts and Raceways for Electrical Systems" for exterior duct banks and manholes, and underground hand holes, boxes, and utility construction.

1.2 SUBMITTALS

A. Product Data: For surface raceways, wire ways and fittings, floor boxes, hinged cover enclosures, and cabinets.

B. Shop Drawings: For custom enclosures and cabinets. Include plans, elevations, sections, details, and attachments to other work.

1.3 QUALITY ASSURANCE

A. Electrical Components, Devices, and Accessories:
Listed and labeled as defined in NFPA 70, Article 100, by a testing agency acceptable to authorities having jurisdiction, and marked for intended use.

B. Comply with NFPA 70.

PART 2 - PRODUCTS

2.1 METAL CONDUIT AND TUBING

A. Rigid Steel Conduit: ANSI C80.1

B. IMC: ANSI C80.6

C. EMT: ANSI C80.3

D. FMC: Zinc coated steel.

E. LFMC: Flexible steel conduit with PVC jacket.

F. Fittings for Conduit (Including all Types and Flexible and Liquid tight), EMT, and Cable:
NEMA FB 1; listed for type and size raceway with which used, and for application and environment in which installed.

1. Conduit Fittings for Hazardous (Classified) Locations: Comply with UL 886.

2. Fittings for EMT: Steel, compression type

2.2 NONMETALLIC CONDUIT AND TUBING

A. ENT: NEMA TC 13

B. RNC: NEMA TC 2, unless otherwise indicated.

C. LFNC: UL 1660

D. Fittings for ENT and RNC: NEMA TC 3; match to conduit or tubing type and material.

E. Fittings for LFNC: UL 5l4B

2.3 METAL WIREWAYS

A. Manufacturers: Subject to compliance with requirements, provide products by one of the following:

1. Cooper B-Line, Inc.

2. Hoffman.

3. Square D; Schneider Electric

B. Description: Sheet metal sized and shaped as indicated, NEMA 250, Type l or 3R, unless otherwise indicated.

C. Fittings and Accessories:
Include couplings, offsets, elbows, expansion joints, adapters, hold down straps, end caps, and other fittings to match and mate with wire ways as required for complete system.

D. Wire way Covers: Screw cover type

E. Finish: Manufacturer's standard enamel finish

2.4 NON-METALLIC WIREWAYS

A. Manufacturers: Subject to compliance with requirements, provide products by one of the following:

1. Hoffman

2. Lamson & Sessions; Carlon Electrical Products

B. Description:
PVC plastic extruded and fabricated to size and shape indicated, with snap-on cover and mechanically coupled connections with plastic fasteners.

C. Fittings and Accessories:
Include couplings, offsets, elbows, expansion joints, adapters, hold down straps, end caps, and other fittings to match and mate with wire ways as required for complete system.

2.5 BOXES, ENCLOSURES, AND CABINETS

A. Sheet Metal Outlet and Device Boxes: NEMA OS l.

B. Cast-Metal Outlet and Device Boxes: NEMA FB l, ferrous alloy, Type FD, with gasketed cover.

C. Nonmetallic Outlet and Device Boxes: NEMA OS 2.

D. Metal Floor Boxes: Cast metal, fully adjustable, rectangular

E. Small Sheet Metal Pull and Junction Boxes: NEMA OS I.

F. Cast-Metal Access, Pull, and Junction Boxes: NEMA FB 1, galvanized, cast iron with gasketed cover.

G. Hinged Cover Enclosures: NEMA 250, Type l, with continuous hinge cover with flush latch, unless otherwise indicated.

1. Metal Enclosures: Steel, finished inside and out with manufacturer's standard enamel.

2. Nonmetallic Enclosures: Plastic

H. Cabinets:

1. NEMA 250, Type 1, galvanized steel box with removable interior panel and removable front, finished inside and out with manufacturer's standard enamel.

2. Hinged door in front cover with flush latch and concealed hinge.

3. Key latch to match panelboards.

4. Metal barriers to separate wiring of different systems and voltage.

5. Accessory feet where required for freestanding equipment.

PART 3 - EXECUTION

3.1 RACEWAY APPLICATION

A. Outdoors: Apply raceway products as specified below, unless otherwise indicated:

1. Exposed Conduit: Rigid steel conduit

2. Concealed Conduit, Aboveground: Rigid steel conduit, EMT

3. Underground Conduit: RNC, Type EPC-40-PVC, direct buried

4. Connection to Vibrating Equipment (Including Transformers and Hydraulic, Pneumatic, Electric Solenoid, or Motor-Driven Equipment): LFMC

5. Boxes and Enclosures, Aboveground: NEMA 250, Type 3R

B. Comply with the following indoor applications, unless otherwise indicated:

1. Exposed, Not Subject to Physical Damage: EMT

2. Exposed, Not Subject to Severe Physical Damage: EMT

3. Exposed and Subject to Severe Physical Damage: Rigid steel conduit. Includes raceways in the following locations:

   a. Loading dock.

   b. Corridors used for traffic of mechanized carts, forklifts, and pallet-handling units.

   c. Mechanical rooms.

4. Concealed in Ceilings and Interior Walls and Partitions: EMT

5. Connection to Vibrating Equipment (Including Transformers and Hydraulic, Pneumatic, Electric Solenoid, or Motor Driven Equipment):
FMC, except use LFMC in damp or wet locations.

6. Damp or Wet Locations: Rigid steel conduit

7. Raceways for Optical Fiber or Communications Cable: EMT

8. Boxes and Enclosures: NEMA 250, Type 1, except use NEMA 250, Type 4, nonmetallic in damp or wet locations

C. Minimum Raceway Size: 3/4-inch (21-mm) trade size

D. Raceway Fittings: Compatible with raceways and suitable for use and location.

1. Rigid and Intermediate Steel Conduit: Use threaded rigid steel conduit fittings, unless otherwise indicated.

3.2 INSTALLATION

A. Comply with NECA 1 for installation requirements applicable to products specified in Part 2 except where requirements on Drawings or in this Article are stricter.

B. Keep raceways at least 6 inches (150 mm) away from parallel runs of flues and steam or hot-water pipes. Install horizontal raceway runs above water and steam piping.

C. Complete raceway installation before starting conductor installation.

D. Support raceways as specified in Division 26 Section "Hangers and Supports for Electrical Systems."

E. Arrange stub-ups so curved portions of bends are not visible above the finished slab.

F. Install no more than the equivalent of three 90-degree bends in any conduit run except for communications conduits, for which fewer bends are allowed.

G. Conceal conduit and EMT within finished walls, ceilings, and floors, unless otherwise indicated.

H. Raceway Terminations at Locations Subject to Moisture or Vibration:
Use insulating bushings to protect conductors, including conductors smaller than No. 4 AWG.

I. Install pull wires in empty raceways. Use polypropylene or monofilament plastic line with not less than 200-lb (90-kg) tensile strength. Leave at least 12 inches (300 mm) of slack at each end of pull wire.

J. Raceways for Optical Fiber and Communications Cable: Install as follows:

1. 3/4-Inch (19-mm) Trade Size and Smaller: Install raceways in maximum lengths of 50 feet (15m).

2. l-Inch (25-mm) Trade Size and Larger: Install raceways in maximum lengths of 75 feet (23m).

3. Install with a maximum of two 90-degree bends or equivalent for each length of raceway unless Drawings show stricter requirements. Separate lengths with pull or junction boxes or terminations at distribution frames or cabinets where necessary to comply with these requirements.

K. Install raceway sealing fittings at suitable, approved, and accessible locations and fill them with listed sealing compound. For concealed raceways, install each fitting in a flush steel box with a blank cover plate having a finish like that of adjacent plates or surfaces. Install raceway sealing fittings at the following points:

1. Where conduits pass from warm to cold locations, such as boundaries of refrigerated spaces.

2. Where otherwise required by NFPA 70.

L. Expansion-Joint Fittings for RNC:
Install in each run of aboveground conduit that is located where environmental temperature change may exceed 30°F (17°C), and that has straight-run length that exceeds 25 feet (7.6 m).

1. Install expansion joint fittings for each of the following locations, and provide type and quantity of fittings that accommodate temperature change listed for location:

a. Outdoor Locations Not Exposed to Direct Sunlight: 125°F (70°C) temperature change.

b. Outdoor Locations Exposed to Direct Sunlight: 155°F (86°C) temperature change

c. c. Indoor Spaces Connected with the Outdoors without Physical Separation: 125°F (70°C) temperature change

d. Attics: 135°F (75°C) temperature change

2. Install fitting(s) that provide expansion and contraction for at least 0.00041 inch per foot of length of straight run per degree Fahrenheit (0.06 mm per meter of length of straight run per degree Celsius) of temperature change.

3. Install each expansion joint fitting with position, mounting, and piston setting selected according to manufacturer's written instructions for conditions at specific location at the time of installation.

M. Flexible Conduit Connections:
Use maximum of 72 inches (1830 mm) of flexible conduit for recessed and semi recessed lighting fixtures, equipment subject to vibration, noise transmission, or movement; and for transformers and motors.

1. Use LFMC in damp or wet locations subject to severe physical damage.

2. Use LFMC or LFNC in damp or wet locations not subject to severe physical damage.

N. Recessed Boxes in Masonry Walls:
Saw-cut opening for box in center of cell of masonry block and install box flush with surface of wall.

O. Set metal floor boxes level and flush with finished floor surface.

3.3 PROTECTION

A. Provide final protection and maintain conditions that ensure coatings, finishes, and cabinets are without damage or deterioration at time of Substantial Completion.

1. Repair damage to galvanized finishes with zinc-rich paint recommended by manufacturer.

END OF SECTION

PART 1 - GENERAL

1.1 RELATED DOCUMENTS

A. Drawings and general provisions of the Contract, including General and Supplementary Conditions and Division 01 Specification Sections, apply to this Section.

1.2 SUMMARY

A. This Section includes the following:

1. Isolation pads
2. Spring isolators
3. Restrained spring isolators
4. Channel support systems
5. Restraint cables
6. Hanger rod stiffeners
7. Anchorage bushings and washers

B. Related Sections include the following:

1. Section 260529 "Hangers and Supports for Electrical Systems" for commonly used electrical supports and installation requirements.

1.3 DEFINITIONS

A. The IBC: International Building Code

B. ICC-ES: ICC-Evaluation Service

1.4 PERFORMANCE REQUIREMENTS

A. Seismic-Restraint Loading:

1. Site Class as Defined in the IBC: D
2. Assigned Seismic Use Group or Building Category as Defined in the IBC:

a. Occupancy Category: IV

b. Seismic Design Category: D

c. Component Importance Factor: 1.5

d. Component Response Modification Factor: 2.5

e. Component Amplification Factor: 1.5 for fixed equipment. 2.5. for flexible components

3. Design Spectral Response Acceleration at Short Periods (0.2 Second): 1.1%

4. Design Spectral Response Acceleration at 1.0-Second Period: 1.8%

1.5 ACTION SUBMITTALS

A. Product Data: For the following:

1. Include rated load, rated deflection, and overload capacity for each vibration isolation device.

2. Illustrate and indicate style, material, strength, fastening provision, and finish for each type and size of seismic-restraint component used.

a. Tabulate types and sizes of seismic restraints, complete with report numbers and rated strength in tension and shear as evaluated by an evaluation service member of ICC-ES acceptable to authorities having jurisdiction.

b. Annotate to indicate application of each product submitted and compliance with requirements.

3. Restrained Isolation Devices: Include ratings for horizontal, vertical, and combined loads.

B. Delegated Design Submittal:
For vibration isolation and seismic restraint details indicated to comply with performance requirements and design criteria, including analysis data signed and sealed by the qualified professional engineer responsible for their preparation.

1. Design Calculations:
Calculate static and dynamic loading due to equipment weight and operation, seismic forces required to select vibration isolators and seismic restraints.

a. Coordinate design calculations with wind load calculations required for equipment mounted outdoors. Comply with requirements in other electrical Sections for equipment mounted outdoors.

2. Indicate materials and dimensions and identify hardware, including attachment and anchorage devices.

3. Field fabricated supports

4. Seismic Restraint Details:

a. Design Analysis:
To support selection and arrangement of seismic restraints. Include calculations of combined tensile and shear loads.

b. Details:
Indicate fabrication and arrangement. Detail attachments of restraints to the restrained items and to the structure. Show attachment locations, methods, and spacing. Identify components, list their strengths, and indicate directions and values of forces transmitted to the structure during seismic events. Indicate association with vibration isolation devices.

c. Preapproval and Evaluation Documentation:
By an evaluation service member of ICC-ES acceptable to authorities having jurisdiction, showing maximum ratings of restraint items and the basis for approval (tests or calculations).

1.6 INFORMATIONAL SUBMITTALS

A. Coordination Drawings:
Show coordination of seismic bracing for electrical components with other systems and equipment in the vicinity, including other supports and seismic restraints.

B. Qualification Data: For professional engineer and testing agency

C. Field quality control test reports

1.7 QUALITY ASSURANCE

A. Comply with seismic restraint requirements in the IBC unless requirements in this Section are more stringent.

B. Seismic restraint devices shall have horizontal and vertical load testing and analysis and shall bear anchorage preapproval OPA number from OSHPD, preapproval by ICC-ES, or preapproval by another agency acceptable to authorities having jurisdiction, showing maximum seismic-restraint ratings. Ratings based on independent testing are preferred to ratings based on calculations. If preapproved ratings are not available, submittals based on independent testing are preferred. Calculations (including combining shear and tensile loads) to support seismic restraint designs must be signed and sealed by a qualified professional engineer.

C. Comply with NFPA 70.

PART 2 - PRODUCTS

2.1 VIBRATION ISOLATORS

A. Available Manufacturers:
Subject to compliance with requirements, manufacturers offering products that may be incorporated into the Work include, but are not limited to, the following:

1. Ace Mountings Co., Inc.

2. Amber/Booth Company, Inc.

3. California Dynamics Corporation

4. Isolation Technology, Inc.

5. Kinetics Noise Control

6. Mason Industries

7. Vibration Eliminator Co., Inc.

8. Vibration Isolation

9. Vibration Mountings & Controls, Inc.

B. Pads:
Arrange in single or multiple layers of sufficient stiffness for uniform loading over pad area, molded with a nonslip pattern and galvanized steel baseplates, and factory cut to sizes that match requirements of supported equipment.

1. Resilient Material: Oil and water-resistant neoprene.

C. Spring Isolators: Freestanding, laterally stable, open spring isolators

1. Outside Spring Diameter: Not less than 80 percent of the compressed height of the spring at rated load

2. Minimum Additional Travel: 50 percent of the required deflection at rated load

3. Lateral Stiffness: More than 80 percent of rated vertical stiffness

4. Overload Capacity: Support 200 percent of rated load, fully compressed, without deformation or failure.

5. Baseplates:
Factory drilled for bolting to structure and bonded to I/4-inch (6-mm) thick, rubber isolator pad attached to baseplate underside. Baseplates shall limit floor load to 500 psig (3447 kPa).

6. Top Plate and Adjustment Bolt:
Threaded top plate with adjustment bolt and cap screw to fasten and level equipment.

D. Restrained Spring Isolators: Freestanding, steel, open spring isolators with seismic or limit-stop restraint.

1. Housing:
Steel with resilient vertical limit stops to prevent spring extension due to weight being removed; factory drilled baseplate bonded to 1/4-inch (6-mm) thick, neoprene or rubber isolator pad attached to baseplate underside; and adjustable equipment mounting and leveling bolt that acts as blocking during installation.

2. Restraint: Seismic or limit-stop as required for equipment and authorities having jurisdiction.

3. Outside Spring Diameter: Not less than 80 percent of the compressed height of the spring at rated load.

4. Minimum Additional Travel: 50 percent of the required deflection at rated load.

5. Lateral Stiffness: More than 80 percent of rated vertical stiffness.

6. Overload Capacity: Support 200 percent of rated load, fully compressed, without deformation or failure.

2.2 SEISMIC-RESTRAINT DEVICES

A. Available Manufacturers:
Subject to compliance with requirements, manufacturers offering products that may be incorporated into the Work include, but are not limited to, the following:

1. Amber/Booth Company, Inc.

2. California Dynamics Corporation

3. Cooper B-Line, Inc.; a division of Cooper Industries

4. Hilti Inc.

5. Loos & Co.; Seismic Earthquake Division

6. Mason Industries

7. TOLCO Incorporated; a brand of NIBCO INC.

8. Unistrut; Tyco International, Ltd.

B. General Requirements for Restraint Components:
Rated strengths, features, and application requirements shall be as defined in reports by an evaluation service member of ICC-ES acceptable to authorities having jurisdiction.

1. Structural Safety Factor:
Allowable strength in tension, shear, and pullout force of components shall be at least four times the maximum seismic forces to which they will be subjected.

C. Channel Support System:
MFMA-3, shop or field fabricated support assembly made of slotted steel channels with accessories for attachment to braced component at one end and to building structure at the other end and other matching components and with corrosion-resistant coating; and rated in tension, compression, and torsion forces.

D. Restraint Cables:
ASTM A 492 stainless-steel cables with end connections made of steel assemblies with thimbles, brackets, swivels, and bolts designed for restraining cable service; and with a minimum of two clamping bolts for cable engagement.

E. Hanger Rod Stiffener:
Steel tube or steel slotted support system sleeve with internally bolted connections to hanger rod. Do not weld stiffeners to rods.

F. Bushings for Floor Mounted Equipment Anchor:
Neoprene bushings designed for rigid equipment mountings and matched to type and size of anchors and studs.

G. Bushing Assemblies for Wall Mounted Equipment Anchorage:
Assemblies of neoprene elements and steel sleeves designed for rigid equipment mountings and matched to type and size of attachment devices.

H. Resilient Isolation Washers and Bushings: One-piece, molded, oil and water-resistant neoprene, with a flat washer face.

I. Mechanical Anchor:
Drilled in and stud wedge or female wedge type in zinc coated steel for interior applications and stainless steel for exterior applications. Select anchors with strength required for anchor and as tested according to ASTM E 488. Minimum length of eight times diameter.

J. Adhesive Anchor:
Drilled in and capsule anchor system containing polyvinyl or urethane methacrylate-based resin and accelerator, or injected polymer or hybrid mortar adhesive. Provide anchor bolts and hardware with zinc coated steel for interior applications and stainless steel for exterior applications. Select anchor bolts with strength required for anchor and as tested according to ASTM E 488.

2.3 FACTORY FINISHES

A. Finish: Manufacturer's standard prime coat finish ready for field painting.

B. Finish: Manufacturer's standard paint applied to factory assembled and tested equipment before shipping.

1. Powder coating on springs and housings

2. All hardware shall be galvanized. Stainless steel components for exterior use.

3. Baked enamel or powder coat for metal components on isolators for interior use.

4. Color code or otherwise mark vibration isolation and seismic control devices to indicate capacity range.

PART 3 - EXECUTION

3.1 EXAMINATION

A. Examine areas and equipment to receive vibration isolation and seismic control devices for compliance with requirements for installation tolerances and other conditions affecting performance.

B. Examine roughing in of reinforcement and cast in place anchors to verify actual locations before installation.

C. Proceed with installation only after unsatisfactory conditions have been corrected.

3.2 APPLICATIONS

A. Multiple Raceways or Cables:
Secure raceways and cables to trapeze member with clamps approved for application by an evaluation service member of ICC-ES acceptable to authorities having jurisdiction.

B. Hanger Rod Stiffeners:
Install hanger rod stiffeners where indicated or scheduled on Drawings to receive them and where required to prevent buckling of hanger rods due to seismic forces.

C. Strength of Support and Seismic Restraint Assemblies:
Where not indicated, select sizes of components so strength will be adequate to carry present and future static and seismic loads within specified loading limits.

3.3 SEISMIC-RESTRAINT DEVICE INSTALLATION

A. Equipment and Hanger Restraints:

1. Install restrained isolators on electrical equipment.

2. Install resilient, bolt-isolation washers on equipment anchor bolts where clearance between anchor and adjacent surface exceeds 0.125 inch (3.2 mm).

3. Install seismic restraint devices using methods approved by an evaluation service member of ICC-ES acceptable to authorities having jurisdiction providing required submittals for component.

B. Install bushing assemblies for mounting bolts for wall mounted equipment, arranged to provide resilient media where equipment or equipment-mounting channels are attached to wall.

C. Attachment to Structure:
If specific attachment is not indicated, anchor bracing to structure at flanges of beams, at upper truss chords of bar joists, or at concrete members.

D. Drilled-in Anchors:

1. Identify position of reinforcing steel and other embedded items prior to drilling holes for anchors. Do not damage existing reinforcing or embedded items during coring or drilling. Notify the structural engineer if reinforcing steel or other embedded items are encountered during drilling. Locate and avoid pre-stressed tendons, electrical and telecommunications conduit, and gas lines.

2. Do not drill holes in concrete or masonry until concrete, mortar, or grout has achieved full design strength.

3. Wedge Anchors:
Protect threads from damage during anchor installation. Heavy duty sleeve anchors shall be installed with sleeve fully engaged in the structural element to which anchor is to be fastened.

4. Adhesive Anchors:
Clean holes to remove loose material and drilling dust prior to installation of adhesive. Place adhesive in holes proceeding from the bottom of the hole and progressing toward the surface in such a manner as to avoid introduction of air pockets in the adhesive.

5. Set anchors to manufacturer's recommended torque, using a torque wrench.

6. Install zinc coated steel anchors for interior and stainless-steel anchors for exterior applications.

3.4 ACCOMMODATION OF DIFFERENTIAL SEISMIC MOTION

A. Install flexible connections in runs of raceways, cables, wire ways, cable trays, and busways where they cross seismic joints, where adjacent sections or branches are supported by different structural elements, and where they terminate with connection to equipment that is anchored to a different structural element from the one supporting them as they approach equipment.

3.5 FIELD QUALITY CONTROL

A. Testing Agency: Engage a qualified testing agency to perform tests and inspections and prepare test reports.

B. Perform tests and inspections.

C. Tests and Inspections:

1. Provide evidence of recent calibration of test equipment by a testing agency acceptable to authorities having jurisdiction.

2. Schedule test with Owner, through Owner’s Representative, before connecting anchorage device to restrained component (unless post connection testing has been approved), and with at least seven days' advance notice.

3. Obtain Owner’s Representative approval before transmitting test loads to structure. Provide temporary load spreading members.

4. Test at least four of each type and size of installed anchors and fasteners selected by Owner's Representative.

5. Test to 90 percent of rated proof load of device.

6. Measure isolator restraint clearance.

7. Measure isolator deflection.

8. Verify snubber minimum clearances.

9. If a device fails test, modify all installations of same type and retest until satisfactory results are achieved.

D. Remove and replace malfunctioning units and retest as specified above.

E. Prepare test and inspection reports.

3.6 ADJUSTING

A. Adjust isolators after isolated equipment is at operating weight.

B. Adjust limit stops on restrained spring isolators to mount equipment at normal operating height. After equipment installation is complete, adjust limit stops so they are out of contact during normal operation.

C. Adjust active height of spring isolators.

D. Adjust restraints to permit free movement of equipment within normal mode of operation.

END OF SECTION

PART 1 - GENERAL

1.1 SUMMARY

A. Section Includes:

1. Identification for raceways
2. Identification of power and control cables
3. Identification for conductors
4. Underground line warning tape
5. Warning labels and signs
6. Instruction signs
7. Equipment identification labels
8. Miscellaneous identification products

1.2 SUBMITTALS

A. Product Data: For each electrical identification product indicated.

1.3 QUALITY ASSURANCE

A. Comply with ANSI Al3.1.

B. Comply with NFPA 70.

C. Comply with 29 CFR 1910.144 and 29 CFR 1910.145.

D. Comply with ANSI Z535.4 for safety signs and labels.

E. Adhesive-attached labeling materials, including label stocks, laminating adhesives, and inks used by label printers, shall comply with UL 969.

PART 2 -PRODUCTS

2.1 POWER RACEWAY IDENTIFICATION MATERIALS

A. Comply with ANSI Al3.1 for minimum size of letters for legend and for minimum length of color field for each raceway size.

B. Self-Adhesive Vinyl Labels for Raceways Carrying Circuits at 600 V or Less:
Preprinted, flexible label laminated with a clear, weather and chemical resistant coating and matching wraparound adhesive tape for securing ends of legend label.

C. Snap Around Labels for Raceways Carrying Circuits at 600 V or Less:
Slit, pre-tensioned, flexible, pre-printed, color coded acrylic sleeve, with diameter sized to suit diameter of raceway or cable it identifies and to stay in place by gripping action.

D. Snap Around, Color Coding Bands for Raceways Carrying Circuits at 600 V or Less:
Slit, pre-tensioned, flexible, solid colored acrylic sleeve, 2 inches (50 mm) long, with diameter sized to suit diameter of raceway or cable it identifies and to stay in place by gripping action.

E. Write On Tags:
Polyester tag, 0.010 inch (0.25 mm) thick, with corrosion resistant grommet and cable tie for attachment to conductor or cable.

1. Marker for Tags: Permanent, waterproof, black ink marker recommended by tag manufacturer.

2.2 POWER AND CONTROL CABLE IDENTIFICATION MATERIALS

A. Comply with ANSI A13.1 for minimum size of letters for legend and for minimum length of color field for each raceway and cable size.

B. Self-Adhesive Vinyl Labels:
Preprinted, flexible label laminated with a clear, weather and chemical resistant coating and matching wrap around adhesive tape for securing ends of legend label.

C. Write On Tags:
Polyester tag, 0.010 inch (0.25 mm) thick, with corrosion resistant grommet and cable tie for attachment to conductor or cable.

1. Marker for Tags:
Permanent, waterproof, black ink marker recommended by tag manufacturer.

D. Snap Around Labels:
Slit, pre-tensioned, flexible, preprinted, color coded acrylic sleeve, with diameter sized to suit diameter of raceway or cable it identifies and to stay in place by gripping action.

E. Snap Around, Color Coding Bands:
Slit, pre-tensioned, flexible, solid colored acrylic sleeve, 2 inches (50 mm) long, with diameter sized to suit diameter of raceway or cable it identifies and to stay in place by gripping action.

2.3 CONDUCTOR IDENTIFICATION MATERIALS

A. Color Coding Conductor Tape:
Colored, self-adhesive vinyl tapes not less than 3 mils (0.08 mm) thick by 1 to 2 inches (25 to 50 mm) wide.

B. Self-Adhesive Vinyl Labels:
Preprinted, flexible label laminated with a clear, weather and chemical resistant coating and matching wraparound adhesive tape for securing ends of legend label.

C. Marker Tapes:
Vinyl or vinyl cloth, self-adhesive wraparound type, with circuit identification legend machine printed by thermal transfer or equivalent process.

D. Write On Tags:
Polyester tag, 0.010 inch (0.25 mm) thick, with corrosion-resistant grommet and cable tie for attachment to conductor or cable.

1. Marker for Tags: Permanent, waterproof, black ink marker recommended by tag manufacturer.

2.4 WARNING LABELS AND SIGNS

A. Comply with NFPA 70 and 29 CFR 1910.145.

B. Self-Adhesive Warning Labels:
Factory printed, multicolor, pressure sensitive adhesive labels, configured for display on front cover, door, or other access to equipment unless otherwise indicated.

C. High Density Polyethylene (HDPE) Warning Signs:

1. Preprinted Dual Color Routed HDPE signs punched or drilled for fasteners, with colors, legend, and size required for application.

2. 1/4-inch (6.4-mm) grommets in corners for mounting.

3. Nominal size, 7 by 10 inches (180 by 250 mm).

D. Warning label and sign shall include, but are not limited to, the following legends:

1. Multiple Power Source Warning:
"DANGER - ELECTRICAL SHOCK HAZARD - EQUIPMENT HAS MULTIPLE POWER SOURCES."

2. Workspace Clearance Warning:
"WARNING - OSHA REGULATION - AREA IN FRONT OF ELECTRICAL EQUIPMENT MUST BE KEPT CLEAR FOR 36 INCHES (915 MM)."

2.5 INSTRUCTION SIGNS

A. Routed, Dual Color HDPE, minimum 1/2-inch-thick for signs up to 20 sq. inches (129 sq. m) and 3/4-inch-thick for larger sizes.

1. Routed legend with black letters on white face.

2. Punched or drilled for mechanical fasteners.

3. Framed with mitered acrylic molding and arranged for attachment at applicable equipment.

2.6 MISCELLANEOUS IDENTIFICATION PRODUCTS

A. Paint:
Comply with requirements in Division 09 painting Sections for paint materials and application requirements. Select paint system applicable for surface material and location (exterior or interior).

B. Fasteners for Labels and Signs:
Self-tapping, stainless steel screws or stainless-steel machine screws with nuts and flat and lock washers.

PART 3 - EXECUTION

3.1 INSTALLATION

A. Location:
Install identification materials and devices at locations for most convenient viewing without interference with operation and maintenance of equipment.

B. Apply identification devices to surfaces that require finish after completing finish work.

C. Self-Adhesive Identification Products:
Clean surfaces before application, using materials and methods recommended by manufacturer of identification device.

D. Attach signs and plastic labels that are not self-adhesive type with mechanical fasteners appropriate to the location and substrate.

E. System Identification Color Coding Bands for Raceways and Cables:
Each color-coding band shall completely encircle cable or conduit. Place adjacent bands of two-color markings in contact, side by side. Locate bands at changes in direction, at penetrations of walls and floors, at 50-foot (15-m) maximum intervals in straight runs, and at 25-foot (7.6-m) maximum intervals in congested areas.

F. Underground Line Warning Tape:
During backfilling of trenches install continuous underground line warning tape directly above line at 6 to 8 inches (150 to 200 mm) below finished grade. Use multiple tapes where width of multiple lines installed in a common trench or concrete envelope exceeds 16 inches (400 mm) overall.

G. Painted Identification:
Comply with requirements in Division 09 painting Sections for surface preparation and paint application.

3.2 IDENTIFICATION SCHEDULE

A. Accessible Raceways and Metal Clad Cables, 600 V or Less, for Service, Feeder, and Branch Circuits More Than 30 A, and 120 V to ground:
Install labels at 10-foot (3-m) maximum intervals.

B. Accessible Raceways and Cables within Buildings:

Identify the covers of each junction and pull box of the following systems with self-adhesive vinyl labels with the wiring system legend and system voltage. System legends shall be as follows:

1. Emergency Power

2. Power

3. UPS

C. Power Circuit Conductor Identification, 600 V or Less:
For conductors in vaults, pull and junction boxes, manholes, and hand holes, use color-coding conductor tape to identify the phase.

1. Color Coding for Phase and Voltage Level Identification, 600 V or Less:
Use colors listed below for ungrounded service feeder and branch-circuit conductors.

a. Color shall be factory applied or field applied for sizes larger than No. 8 AWG, if authorities having jurisdiction permit.

b. Colors for 208/120-V Circuits:

i. Phase A: Black

ii. Phase B: Red

iii. Phase C: Blue

c. Colors for 480/277-V Circuits:

i. Phase A: Brown

ii. Phase B: Orange

iii. Phase C: Yellow

D. Install instructional sign including the color code for grounded and ungrounded conductors using adhesive film type labels.

E. Conductors to Be Extended in the Future:
Attach write on tags or marker tape to conductors and list source.

F. Auxiliary Electrical Systems Conductor Identification:
Identify field installed alarm, control, and signal connections.

1. Identify conductors, cables, and terminals in enclosures and at junctions, terminals, and pull points. Identify by system and circuit designation.

2. Use system of marker tape designations that is uniform and consistent with system used by manufacturer for factory installed connections.

3. Coordinate identification with Project Drawings, manufacturer's wiring diagrams, and the Operation and Maintenance Manual.

G. Locations of Underground Lines:
Identify with underground-line warning tape for power, lighting, communication, and control wiring and optical fiber cable.

1. Install underground line warning tape for both direct buried cables and cables in raceway.

H. Workspace Indication:
Install floor marking tape to show working clearances in the direction of access to live parts. Workspace shall be as required by NFPA 70 and 29 CPR 1926.403 unless otherwise indicated. Do not install at flush mounted panelboards and similar equipment in finished spaces.

I. Warning Labels for Indoor Cabinets, Boxes, and Enclosures for Power and Lighting: Self-adhesive warning labels

1. Comply with 29 CPR 1910.145.

2. Identify system voltage with black letters and an orange background.

3. Apply to exterior of door, cover, or other access.

4. For equipment with multiple power or control sources, apply to door or cover of equipment including, but not limited to, the following:

a. Power transfer switches

b. Controls with external control power connections

J. Operating Instruction Signs:
Install instruction signs to facilitate proper operation and maintenance of electrical systems and items to which they connect. Install instruction signs with approved legend where instructions are needed for system or equipment operation.

K. Emergency Operating Instruction Signs:
Install instruction signs with white legend and a red background with minimum 3/8-inch (10-mm) high letters for emergency instructions at equipment used for power transfer.

L. Equipment Identification Labels:
On each unit of equipment, install unique designation label that is consistent with wiring diagrams, schedules, and the Operation and Maintenance Manual. Apply labels to disconnect switches and protection equipment, central or master units, control panels, control stations, terminal cabinets, and racks of each system. Systems include power, lighting, control, communication, signal, monitoring, and alarm systems unless equipment is provided with its own identification.

1. Labeling Instructions:

a. Indoor Equipment:
Self-adhesive, engraved, laminated acrylic or melamine label. Unless otherwise indicated, provide a single line of text with 1/2-inch (13-mm) high letters on 1-l/2-inch (38-mm) high label; where two lines of text are required, use labels 2 inches (50 mm) high.

b. Outdoor Equipment: Engraved, laminated acrylic or melamine label.

c. Elevated Components: Increase sizes of labels and letters to those appropriate for viewing from the floor.

d. Unless provided with self-adhesive means of attachment, fasten labels with appropriate mechanical fasteners that do not change the NEMA or NRTL rating of the enclosure.

2. Equipment to Be Labeled:

a. Panelboards:
Typewritten directory of circuits in the location provided by panel board manufacturer. Panel board identification shall be self-adhesive, engraved, laminated acrylic or melamine label.

b. Enclosures and electrical cabinets

c. Access doors and panels for concealed electrical items

d. Switchboards

e. Emergency system boxes and enclosures

f. Enclosed switches

g. Enclosed circuit breakers

h. Enclosed controllers

i. Variable-speed controllers

j. Push-button stations

k. Power transfer equipment

l. Contactors

m. Monitoring and control equipment

n. UPS equipment

END OF SECTION

PART 1 - GENERAL

1.1 SUMMARY

A. Section Includes:

1. Occupancy and Vacancy Sensor Control

B. Related Sections:

1. Section 262416 - Panelboards

2. Section 262726 - Wiring Devices: Lighting Controls

3. Section 265100 - Interior Lighting Fixtures, Lamps and Ballasts:
Fluorescent lighting ballasts controlled by central dimming control system.

1.2 REFERENCES

A. American National Standards Institute/Institute of Electrical and Electronic Engineers (ANSI/IEEE):

1. C62.41-l991 -Recommended Practice for Surge Voltages in Low-Voltage AC Power Circuits.

B. ASTM International (ASTM):

1. D4674-02a Standard Test Method for Accelerated Testing for Color Stability of Plastics Exposed to Indoor Fluorescent Lighting and Window-Filtered Daylight.

C. International Electro-Technical Commission (IEC).

1. IEC 801-2 Electrostatic Discharge Testing Standard.

2. IEC/EN 60669-2-l Switches for household and similar fixed electrical installations-electronic switches.

D. International Organization for Standardization (ISO):

1. 900l:2000- Quality Management Systems.

E. National Electrical Manufacturers Association (NEMA)

1. WD1 (R2005) - General Color Requirements for Wiring Devices.

F. Underwriters Laboratories, Inc. (UL):

1. 94 - Flammability Rating

2. 916 - Energy Management Equipment.

3. 508 (2005) - Standard for Industrial Control Equipment.

4. 244A- Appliance Controls

1.3 SYSTEM DESCRIPTION

A. Permanently installed

1. Ceiling mounted occupancy sensors

2. Wall switch occupancy sensors

3. Power packs

1.4 ACTION SUBMITTALS

A. Product Data: For each type of product.

B. Shop Drawings: Show installation details for occupancy and light level sensors.

C. Interconnection diagrams showing field installed wiring.

D. Include diagrams for power, signal, and control wiring.

1.5 INFORMATIONAL SUBMITTALS

A. Field quality control reports.

1.6 CLOSEOUT SUBMITTALS

A. Operation and Maintenance Data:
For each type of lighting control device to include in emergency, operation, and maintenance manuals.

1.7 QUALITY ASSURANCE

A. Manufacturer: Minimum 10 years' experience in manufacture of architectural lighting controls.

B. Manufacturer's Quality System:
Registered to ISO 9001:2000 Quality Standard, including in-house engineering for product design activities.

1.8 PROJECT CONDITIONS

A. Do not install equipment until following conditions can be maintained in spaces to receive equipment:

1. Ambient temperature: Under 40 degrees C (104 degrees F).

2. Relative humidity: Maximum 90 percent, non-condensing.

3. Lighting control system must be protected from dust during installation.

1.9 WARRANTY

A. Provide manufacturer's 1-year parts warranty.

B. Maintenance Material submittals

C. Make ordering of new equipment for expansions, replacements, and spare parts available to end user.

D. Make new replacement parts available for minimum of ten years from date of manufacture.

PART 2 - PRODUCTS

2.1 MANUFACTURERS

A. Basis of Design Product:
Lutron Occupancy Sensors. Subject to compliance with requirements, provide product indicated or comparable product by one of the following:

1. Bryant Electric; a Hubbell company

2. Cooper Industries, Inc.

3. Hubbell Building Automation, Inc.

4. Leviton Mfg. Company Inc.

5. Lutron Electronics Co., Inc.

6. Sensor Switch, Inc.

7. Square D; a brand of Schneider Electric.

8. Watt Stopper.

2.2 GENERAL

A. Provide system software and hardware that is designed, tested, manufactured, and warranted by a single manufacturer.

B. Architectural Lighting Controls:
Ten-year operational life while operating continually at any temperature in an ambient temperature range of 0°C (32°F) to 40°C (104°F) and 90 percent non-condensing relative humidity.

C. Designed and tested to withstand discharges without impairment of performance when subjected to discharges of 15,000 volts per IEC 801-2.

2.3 SENSOR PERFORMANCE REQUIREMENTS

A. Sensing mechanism:

1. Dual technology:

a. Utilize multiple segmented lens, with internal grooves to eliminate dust and residue buildup.

b. Utilize an operating frequency of 32k Hz or 40 kHz that shall be crystal controlled to operate within plus or minus 0.005 percent tolerance.

B. Field adjustable controls for time delay and sensitivity to override any adaptive features.

C. Power failure memory:

1. Controls incorporate non-volatile memory. Should power be interrupted and subsequently restored, settings and learned parameters saved in protected memory shall not be lost.

D. Designed and tested to withstand discharges without impairment of performance when subjected to discharges of 15,000 volts per IEC 801-2.

2.4 WIRED CEILING AND WALL MOUNT SENSORS

A. Product: LOS-CDT-500R-WH, LOS-CDT-IOOOR-WH, LOS-CDT-2000R-WH.

B. Provide all necessary mounting hardware and instructions.

C. Sensors shall be Class 2 devices.

D. Indicate viewing directions on mounting bracket for all Ceiling mount sensors.

E. Provide customizable mask to block off unwanted viewing areas for all ceiling mounted sensors using infrared technology.

F. Provide swivel mount base for all wall mount sensors.

G. Provide an internal additional isolated relay with Normally Open, Normally Closed and Common outputs for use with HVAC control, Data Logging and other control options.

2.5 IN-WALL OCCUPANCY SENSORS

A. Digital wall box no-neutral switch with occupancy/vacancy sensor

1. Product: MS-OPS6M-DV

2. Switch shall be rated at 120/277 Volts 6 amps Lighting / 120 Volts 3 amps Fan Loads and shall not require a neutral connection in wall box.

   a. Rated life: Minimum 100,000 cycles.

   b. Load switched in manner that prevents arcing at mechanical contacts when power is applied to load circuits.

   c. Fully rated output continuous duty for inductive, capacitive, and resistive loads.

3. Utilize Infrared as its sensing mechanism coupled with Lutron XCT™ Technology for sensing fine motions. Signal processing technology detects fine motion, passive infrared (PIR) signals without the need to change the sensor's sensitivity threshold.

4. Occupancy/vacancy sensor can be programmed to operate as an occupancy sensor (automatic-on and automatic-off functionality) or a vacancy sensor (manual-on and automatic-off functionality).

5. Provide adjustable timeout for 15, 30 minutes.

6. Provide ambient light sensor to prevent lights from turning on automatically if ambient light in room is higher than selected setting. Three settings shall be available to for selection by the user.

7. Provide ability when switch is manually turned off, to prevent sensor from turning lights back on automatically while room remains occupied. Once room is vacated, auto-on feature returns to normal operation after timeout duration has exhausted.

8. Utilize air gap off, activated when user selects "off' at any control to disconnect the load from line supply eliminating any leakage current.

9. Protect your switch from power surges during a storm or from other equipment from within the building.

10. Design and test switches to withstand line-side surges without impairment to performance when subjected to surges of 6,000 volts, 200 amps per ANSI/IEEE C62.41 C.

11. This ensures product design lifetime under all installation conditions. For example, products which are not de-rated when installed in a multi-gang installation may experience a reduced design lifetime because of an increased temperature rise.

12. Capable of operating at the rated capacity; this includes modified capacities for ganging configurations which require the removal of fins. Operation at rated capacity shall be possible across the full ambient temperature range, without shortening design lifetime.

13. Provide frequency compensation to assure switching capability on 50 or 60Hz lines.

14. Switches to be listed to UL 20, UL 508, ULI472, CSA C22.2 #14, NOM-003-SCFI

2.6 SENSOR POWER PACKS

A. Product: PP-277H

B. Plenum rated.

C. Control wiring between sensors and control units shall be Class 2, 18-24 AWG, stranded U.L. Classified, TEFLON jacketed cable suitable for use in plenums.

D. Integrated, self-contained unit consisting internally of an isolated load switching control relay and a power supply to provide low-voltage power (PP-SH does not supply power).

2.7 SOURCE QUALITY CONTROL

A. Perform full-function testing on 100 percent of all system components and panel assemblies at the factory.

PART 3 - EXECUTION

3.1 INSTALLATION

A. Install equipment in accordance with manufacturer's installation instructions.

B. Provide complete installation of system in accordance with Contract Documents.

C. Provide equipment at locations and in quantities indicated on Drawings. Provide any additional equipment required to provide control intent.

3.2 SERVICE AND SUPPORT

A. Startup and Programming

1. Provide factory-certified field service engineer to a site visit to ensure proper system installation and operation under following parameters:

a. Qualifications for factory-certified field service engineer:

i. Minimum experience of 2 years training in the electrical/electronic field.

ii. Certified by the equipment manufacturer on the system installed.

b. Make a visit upon completion of installation of lighting control system:

i. Verify connection and location of controls.

ii. Verify system operation control by control, zone by zone.

iii. Verify proper integration of manufacturers interfacing equipment.

iv. Obtain sign-off on system functions.

B. Tech Support

1. Provide factory direct technical support hotline 24 hours per day, 7 days per week.

3.3 MAINTENANCE

A. Capable of providing on-site service support within 24 hours anywhere in continental United States and within 72 hours worldwide except where special visas are required.

B. Offer renewable service contract on yearly basis, to include parts, factory labor, and annual training visits. Make service contracts available up to ten years after date of system startup.

END OF SECTION

PART 1 - GENERAL

1.1 SUMMARY

A. Section includes distribution panelboards and lighting and appliance branch-circuit panelboards.

1.2 SUBMITTALS

A. Product Data: For each type of product indicated

B. Shop Drawings: For each panelboard and related equipment.

1. Include dimensioned plans, elevations, sections, and details. Show tabulations of installed devices, equipment features, and ratings.

2. Detail enclosure types and details for types other than NEMA 250, Type 1.

3. Detail bus configuration, current, and voltage ratings.

4. Short-circuit current rating of panel boards and overcurrent protective devices.

5. Include evidence of NRTL listing for series rating of installed devices.

6. Detail features, characteristics, ratings, and factory settings of individual overcurrent protective devices and auxiliary components.

7. Include wiring diagrams for power, signal, and control wiring.

8. Include time-current coordination curves for each type and rating of overcurrent protective device included in panelboards.

C. Field quality-control reports.

D. Panelboard schedules for installation in panelboards.

E. Operation and maintenance data.

1.3 QUALITY ASSURANCE

A. Electrical Components, Devices, and Accessories:
Listed and labeled as defined in NFPA 70, by a qualified testing agency, and marked for intended location and application.

B. Comply with NEMA PB 1.

C. Comply with NFPA 70.

1.4 WARRANTY

A. Special Warranty:
Manufacturer's standard form in which manufacturer agrees to repair or replace transient voltage suppression devices that fail in materials or workmanship within specified warranty period.

1. Warranty Period: Five years from date of Substantial Completion.

PART 2 - PRODUCTS

2.1 GENERAL REQUIREMENTS FOR PANELBOARDS

A. Enclosures: Flush-mounted cabinets.

1. Rated for environmental conditions at installed location.

a. Indoor Dry and Clean Locations: NEMA 250, Type I

b. Outdoor Locations: NEMA 250, Type 3R

c. Kitchen Wash-Down Areas: NEMA 250, Type 4X

d. Other Wet or Damp Indoor Locations: NEMA 250, Type 3

2. Front:
Secured to box with concealed trim clamps. For surface-mounted fronts, match box dimensions; for flush-mounted fronts, overlap box.

3. Hinged Front Cover: Entire front trim hinged to box and with standard door within hinged trim cover.

4. Directory Card: Inside panelboard door, mounted in transparent card holder.

B. Incoming Mains Location: Top and bottom.

C. Phase, Neutral, and Ground Buses: Hard-drawn copper, 98 percent conductivity

D. Conductor Connectors: Suitable for use with conductor material and sizes.

1. Material: Hard-drawn copper, 98 percent conductivity

2. Main and Neutral Lugs: Compression type

3. Ground Lugs and Bus Configured Terminators: Compression type

4. Feed-Through Lugs:
Compression type, suitable for use with conductor material. Locate at opposite end of bus from incoming lugs or main device.

5. Sub-feed (Double) Lugs:

Compression type suitable for use with conductor material. Locate at same end of bus as incoming lugs or main device.

E. Service Equipment Label:
NRTL labeled for use as service equipment for panelboards with one or more main service disconnecting and overcurrent protective devices.

F. Future Devices:
Mounting brackets, bus connections, filler plates, and necessary appurtenances required for future installation of devices.

G. Panelboard Short-Circuit Current Rating:
Fully rated to interrupt symmetrical short-circuit current available at terminals.

2.2 DISTRIBUTION PANELBOARDS

A. Basis of Design Product:
Subject to compliance with requirements, provide a comparable product by one of the following:

1. Eaton Electrical Inc.; Cutler-Hammer Business Unit

2. General Electric Company; GE Consumer & Industrial- Electrical Distribution

3. Siemens Energy & Automation, Inc.

4. Square D; a brand of Schneider Electric

B. Panelboards: NEMA PB 1, power and feeder distribution type

C. Doors: Secured with vault-type latch with tumbler lock; keyed alike.

D. Mains: Circuit breaker.

E. Branch Overcurrent Protective Devices: For Circuit-Breaker Frame Sizes 125 A and Smaller:

F. Bolt-on circuit breakers.

G. Branch Overcurrent Protective Devices: For Circuit-Breaker Frame Sizes Larger Than 125 A:
Bolt-on circuit breakers; plug-in circuit breakers where individual positive-locking device requires mechanical release for removal.

H. Branch Overcurrent Protective Devices: Fused switches

2.3 LIGHTING AND APPLIANCE BRANCH-CIRCUIT PANELBOARDS

A. Basis of Design Product: Subject to compliance with requirements, provide a comparable product by one of the following:

1. Eaton Electrical Inc.; Cutler-Hammer Business Unit

2. General Electric Company; GE Consumer & Industrial - Electrical Distribution

3. Siemens Energy & Automation, Inc.

4. Square D; a brand of Schneider Electric

B. Panelboards: NEMA PB 1, lighting and appliance branch-circuit type

C. Mains: Circuit breaker

D. Branch Overcurrent Protective Devices: Bolt-on circuit breakers, replaceable without disturbing adjacent units.

E. Contactors in Main Bus: NEMA ICS 2, Class A, electrically held, general-purpose controller, with same short-circuits interrupting rating as panelboard.

1. External Control-Power Source: 24-V control circuit.

F. Doors: Concealed hinges; secured with flush latch with tumbler lock; keyed alike

G. Column-Type Panelboards: Narrow gutter extension, with cover, to overhead junction box equipped with ground and neutral terminal buses.

2.4 DISCONNECTING AND OVERCURRENT PROTECTIVE DEVICES

A. Basis of Design Product: Subject to compliance with requirements, provide or comparable product by one of the following:

1. Eaton Electrical Inc.; Cutler-Hammer Business Unit

2. General Electric Company; GE Consumer & Industrial- Electrical Distribution

3. Siemens Energy & Automation, Inc.

4. Square D; a brand of Schneider Electric

B. Molded-Case Circuit Breaker (MCCB):
Comply with UL 489, with 100% rating to meet available fault currents.

1. Thermal-Magnetic Circuit Breakers:
Inverse time-current element for low-level overloads, and instantaneous magnetic trip element for short circuits. Adjustable magnetic trip setting for circuit breaker frame sizes 250 A and larger.

2. Adjustable Instantaneous-Trip Circuit Breakers: Magnetic trip element with front-mounted, field adjustable trip setting.

3. Electronic trip circuit breakers with RMS sensing; field replaceable rating plug or field replicable electronic trip; and the following field adjustable settings:

a. Instantaneous trip.

b. Long- and short-time pickup levels.

c. Long- and short-time adjustments.

d. Ground-fault pickup level, time delay, and I^2t response.

4. Current-Limiting Circuit Breakers: Frame sizes 400 A and smaller; let through ratings less than NEMA FU l, RK-5.

5. GFCI Circuit Breakers: Single and two pole configurations with Class A ground-fault protection (6-mA trip).

6. Ground-Fault Equipment Protection (GFEP) Circuit Breakers: Class B ground-fault protection (30-mA trip).

7. Arc-Fault Circuit Interrupter (AFCI) Circuit Breakers: Comply with UL 1699; 120/240-V, single pole configuration.

8. Molded-Case Circuit-Breaker (MCCB) Features and Accessories:

a. Standard frame sizes, trip ratings, and number of poles.

b. Lugs: Compression Mechanical style, suitable for number, size, trip ratings, and conductor materials.

c. Application Listing: Appropriate for application; Type SWD for switching fluorescent lighting loads.

d. Ground-Fault Protection:
Integrally mounted relay and trip unit with adjustable pickup and time-delay settings, push-to-test feature, and ground-fault indicator.

e. Communication Capability:
Circuit-breaker mounted communication module with functions and features compatible with power monitoring and control system specified in Division 26 Section "Electrical Power Monitoring and Control."

f. Shunt Trip: 24-V trip coil energized from separate circuit, set to trip at 75 percent of rated voltage.

g. Handle Padlocking Device: Fixed attachment, for locking circuit-breaker handle in on or off position.

h. Handle Clamp: Loose attachment, for holding circuit-breaker handle in on position.

C. <u>Fused Switch</u>: NEMA KS l, Type HD; clips to accommodate specified fuses; lockable handle

1. Fuses, and Spare-Fuse Cabinet: Comply with requirements specified in Division 26 Section "Fuses."

2.5 ACCESSORY COMPONENTS AND FEATURES

A. Portable Test Set:
For testing functions of solid-state trip devices without removing from panelboard. Include relay and meter test plugs suitable for testing panelboard meters and switchboard class relays.

PART 3 -·EXECUTION

3.1 INSTALLATION

A. Receive, inspect, handle, store and install panelboards and accessories according to NECA 407.

B. Mount top of trim 72 inches (1829 mm) above finished floor unless otherwise indicated.

C. Mount panel board cabinet plumb and rigid without distortion of box. Mount recessed panelboards with fronts uniformly flush with wall finish and mating with back box.

D. Install overcurrent protective devices and controllers not already factory installed.

1. Set field-adjustable, circuit-breaker trip ranges

E. Install filler plates in unused spaces.

F. Stub four l-inch (27-GRC) empty conduits from panelboard into accessible ceiling space or space designated to be ceiling space in the future. Stub four l-inch (27-GRC) empty conduits into raised floor space or below slab not on grade.

G. Arrange conductors in gutters into groups and bundle and wrap with wire ties.

H. Comply with NECA I.

3.2 IDENTIFICATION

A. Identify field installed conductors, interconnecting wiring, and components; provide warning signs complying with Division 26 Section "Identification for Electrical Systems."

B. Create a directory to indicate installed circuit loads and incorporating Owner's final room designations. Obtain approval before installing. Use a computer or typewriter to create directory; handwritten directories are not acceptable.

C. Panelboard Nameplates:
Label each panelboard with a nameplate complying with requirements for identification specified in Division 26 Section "Identification for Electrical Systems."

D. Device Nameplates:

Label each branch circuit device in distribution panelboards with a nameplate complying with requirements for identification specified in Division 26 Section "Identification for Electrical Systems."

3.3 FIELD QUALITY CONTROL

A. Perform tests and inspections.

B. Acceptance Testing Preparation:

1. Test insulation resistance for each panelboard bus, component, connecting supply, feeder, and control circuit.

2. Test continuity of each circuit.

C. Tests and Inspections:

1. Perform each visual and mechanical inspection and electrical test stated in NETA Acceptance Testing Specification. Certify compliance with test parameters.

2. Correct malfunctioning units on-site, where possible, and retest to demonstrate compliance; otherwise, replace with new units and retest.

D. Panelboards will be considered defective if they do not pass tests and inspections.

E. Prepare test and inspection reports, including a certified report that identifies panelboards included and that describes scanning results. Include notation of deficiencies detected, remedial action taken, and observations after remedial action.

END OF SECTION

PART 1 -·GENERAL

1.1 SUMMARY

A. This Section includes the following:

1. Receptacles, receptacles with integral GFCI, and associated device plates.

2. Wall switch and exterior occupancy sensors.

1.2 SUBMITTALS

A. Product Data: For each type of product indicated

B. Shop Drawings: List of legends and description of materials and process used for pre-marking wall plates.

C. Operation and Maintenance Data:
For wiring devices to include in all manufacturers' packing label warnings and instruction manuals that include labeling conditions.

1.3 QUALITY ASSURANCE

A. Electrical Components, Devices, and Accessories:
Listed and labeled as defined in NFPA 70, Article 100, by a testing agency acceptable to authorities having jurisdiction, and marked for intended use.

B. Comply with NFPA 70.

PART 2 - PRODUCTS

2.1 MANUFACTURERS

A. Manufacturers' Names:
Shortened versions (shown in parentheses) of the following manufacturers' names are used in other Part 2 articles:

1. Cooper Wiring Devices; a division of Cooper Industries, Inc. (Cooper)

2. Hubbell Incorporated; Wiring Device-Kellems (Hubbell)

3. Leviton Mfg. Company Inc. (Leviton)

4. Pass & Seymour/Legrand; Wiring Devices & Accessories (Pass & Seymour)

2.2 GENERAL WIRING-DEVICE REQUIREMENTS

A. Wiring Devices, Components, and Accessories:
Listed and labeled as defined in NFPA 70, by a qualified testing agency, and marked for intended location and application.

B. Comply with NFPA 70.

C. Devices that are manufactured for use with modular plug-in connectors may be substituted under the following conditions:

1. Connectors shall comply with UL 2459 and shall be made with stranded building wire.

2. Devices shall comply with the requirements in this Section.

D. All 125V and 250V, 20A receptacles shall be listed as weather resistant type per 2008 NEC 406.8, Receptacles in Damp and Wet Locations.

2.3 STRAIGHT BLADE RECEPTACLES

A. Convenience Receptacles, 125 V, 20 A:
Comply with NEMA WD I, NEMA WD 6 configuration 5-20R, and UL498.

1. Products: Subject to compliance with requirements, provide one of the following:

a. Cooper; 5351 (single), 5352 (duplex)

b. Hubbell; HBL5351 (single), CR5352 (duplex)

c. Leviton; 5891 (single), 5352 (duplex)

d. Pass & Seymour; 5381 (single), 5352 (duplex)

2.4 GFCI RECEPTACLES

A. General Description:
Straight blade, non-feed through type. Comply with NEMA WD 1, NEMA WD 6, UL 498, and UL 943, Class A, and include indicator light that is lighted when device is tripped.

B. Duplex GFCI Convenience Receptacles, 125 V, 20 A:

1. Available Products:
Subject to compliance with requirements, products that may be incorporated into the Work include, but are not limited to, the following:

a. Cooper; GF20

b. Pass & Seymour; 2084

2.5 SNAP SWITCHES

A. Comply with NEMA WD 1 and UL 20.

B. Switches, 120/277 V, 20 A:

1. Products: Subject to compliance with requirements, provide one of the following:

a. Cooper: 2221 (single pole), 2222 (two pole), 2223 (three way), 2224 (four way)

b. Hubbell: CS122l (single pole), CS1222 (two pole), CS1223 (three way), CS1224 (four way)

c. Leviton: 1221-2 (single pole), 1222-2 (two pole), 1223-2 (three way), 1224-2 (four way)

d. Pass & Seymour: 20ACl (single pole), 20AC2 (two pole), 20AC3 (three way), 20AC4 (four way)

C. Key Operated Switches, 120/277 V, 20 A:

1. Products: Subject to compliance with requirements, provide one of the following:

a. Cooper: 2221L

b. Hubbell: HBL 1221L

c. Leviton: 1221-2L

d. Pass & Seymour: PS20AC1-L

2. Description: Single pole, with factory supplied key in lieu of switch handle.

D. Single Pole, Double Throw, Momentary Contact, Center Off Switches, 120/277 V, 20 A; for use with mechanically held lighting contactors.

1. Products: Subject to compliance with requirements, provide one of the following:

a. Cooper: 1995

b. Hubbell: HBL1557

c. Leviton: 1257

d. Pass & Seymour: 1251

E. Key-Operated, Single-Pole, Double-Throw, Momentary Contact, Center-Off Switches, I20/277 V, 20 A; for use with mechanically held lighting contactors, with factory supplied key in lieu of switch handle.

1. Products: Subject to compliance with requirements, provide one of the following:

a. Cooper: 1995L

b. Hubbell: HBL1557L.

c. Leviton: 1257L.

d. Pass & Seymour: 1251L

2.6 WALL PLATES

A. Single and combination types to match corresponding wiring devices.

1. Plate Securing Screws: Metal with head color to match plate finish.

2. Material for Finished Spaces: Smooth, high-impact thermoplastic.

3. Material for Unfinished Spaces: Smooth, high-impact thermoplastic.

4. Material for Damp Locations: Thermoplastic with spring loaded lift cover, and listed and labeled for use in "wet locations."

B. Wet Location, Weatherproof Cover Plates:
NEMA 250, complying with type 3R weather resistant thermoplastic with lockable cover.

2.7 FINISHES

A. Color: TBD by the Owner's Representative. Plates and screw heads shall match device color.

1. Wiring Devices Connected to Normal Power System:
White, unless otherwise indicated or required by NFPA 70 or device listing

2. Wiring Devices Connected UPS Power System: Red

3. TVSS Devices: Blue.

PART 3 - EXECUTION

3.1 INSTALLATION

A. Comply with NECA 1, including the mounting heights listed in that standard, unless otherwise noted.

B. Coordination with Other Trades:

1. Take steps to ensure that devices and their boxes are protected. Do not place wall finish materials over device boxes and do not cut holes for boxes with routers that are guided by riding against outside of the boxes.

2. Keep outlet boxes free of plaster, drywall joint compound, mortar, cement, concrete, dust, paint, and other material that may contaminate the raceway system, conductors, and cables.

3. Install device boxes in brick or block walls so that the cover plate does not cross a joint unless the joint is troweled flush with the face of the wall.

4. Install wiring devices after all wall preparation, including painting, is complete.

C. Conductors:

1. Do not strip insulation from conductors until just before they are spliced or terminated on devices.

2. Strip insulation evenly around the conductor using tools designed for the purpose. Avoid scoring or nicking of solid wire or cutting strands from stranded wire.

3. The length of free conductors at outlets for devices shall meet provisions of NFPA 70, Article 300, without pigtails.

D. Device Installation:

1. Replace all devices that have been in temporary use during construction or that show signs that they were installed before building finishing operations were complete.

2. Keep each wiring device in its package or otherwise protected until it is time to connect conductors.

3. Do not remove surface protection, such as plastic film and smudge covers, until the last possible moment.

4. Connect devices to branch circuits using pigtails that are not less than 6 inches (152 mm) in length.

5. Use side wiring with binding-head screw terminals. Wrap solid conductor tightly clockwise, 2/3 to 3/4 of the way around terminal screw.

6. Use a torque screwdriver when a torque is recommended or required by the manufacturer.

7. When conductors larger than No. 12 AWG are installed on 15 or 20-A circuits, splice No. 12 AWG pigtails for device connections.

8. Tighten unused terminal screws on the device.

9. When mounting into metal boxes, remove the fiber or plastic washers used to hold device mounting screws in yokes, allowing metal-to-metal contact.

10. Every room shall have lighting control device whether indicated or not on plans.

11. Install a motor rated service switch at each connection to 120V fan motors whether indicated or not on plans.

12. Receptacles installed outdoors shall be GFCI type and have rain tight "In-Use" cover.

13. Adjust outlet heights in ceramic tile walls to be entirely in or entirely out of the tile. Outlets to be horizontal to most space conditions.

14. Coordinate device mounting with Architectural drawings prior to rough-in.

15. Device and Plate Color:

a. White: Devices connected to Normal Power Circuit.

b. Gray: Device connected to UPS Power Circuit.

c. Red: Devices connected to Emergency Power Circuit.

E. Receptacle Orientation:

1. Install ground pin of vertically mounted receptacles up, and on horizontally mounted receptacles to the right.

F. Device Plates:
Do not use oversized or extra deep plates. Repair wall finishes and remount outlet boxes when standard device plates do not fit flush or do not cover rough wall opening.

G. Dimmers:

1. Install dimmers within terms of their listing.

2. Verify that dimmers used for fan speed control are listed for that application.

3. Install unshared neutral conductors online and load side of dimmers according to manufacturers' device listing conditions in the written instructions.

H. Arrangement of Devices:

1. Unless otherwise indicated, mount flush, with long dimension vertical and with grounding terminal of receptacles on top.

2. Group adjacent switches under single, multi-gang wall plates.

3. Align vertically receptacles, light switches and fire alarm devices when shown near each other.

3.2 IDENTIFICATION

A. Comply with Division 26 Section "Identification for Electrical Systems."

1. Receptacles:
Identify panelboard and circuit number from which served. Use hot, stamped or engraved machine printing with black-filled lettering on face of plate, and durable wire markers or tags inside outlet boxes.

3.3 FIELD QUALITY CONTROL

A. Perform tests and inspections and prepare test reports.

1. Test Instruments: Use instruments that comply with UL 1436.

2. Test Instrument for Convenience Receptacles: Digital wiring analyzer with digital readout or illuminated LED indicators of measurement.

B. Tests for Convenience Receptacles:

1. Line Voltage: Acceptable range is 105 to 132V.

2. Percent Voltage Drop under 15-A Load: A value of 6 percent or higher is not acceptable.

3. Ground Impedance: Values of up to 2 ohms are acceptable.

4. GFCI Trip: Test for tripping values specified in UL 1436 and UL 943

5. Using the test plug, verify that the device and its outlet box are securely mounted.

6. The tests shall be diagnostic, indicating damaged conductors, high resistance at the circuit breaker, poor connections, inadequate fault current path, defective devices, or similar problems. Correct circuit conditions remove malfunctioning units and replace with new, and retest as specified above.

END OF SECTION

PART 1 - GENERAL

1.1 SUMMARY

A. Section Includes:

1. Fusible switches
2. Non-fusible switches
3. Molded case circuit breakers (MCCBs)
4. Enclosures

1.2 DEFINITIONS

A. NC: Normally closed.

B. NO: Normally open.

C. SPDT: Single pole, double throw

1.3 SUBMITTALS

A. Product Data: For each type of enclosed switch, circuit breaker, accessory, and component indicated

B. Shop Drawings:
For enclosed switches and circuit breakers. Include plans, elevations, sections, details, and attachments to other work.

1. Wiring Diagrams: For power, signal, and control wiring

C. Field quality-control reports

D. Operation and maintenance data

1.4 QUALITY ASSURANCE

A. Electrical Components, Devices, and Accessories:
Listed and labeled as defined in NFPA 70, by a qualified testing agency, and marked for intended location and application.

B. Comply with NFPA 70.

PART 2 - PRODUCTS

2.1 FUSIBLE SWITCHES

A. Basis-of-Design Product: Subject to compliance with requirements, provide a comparable product by one of the following:

1. Eaton Electrical Inc.; Cutler-Hammer Business Unit

2. General Electric Company; GE Consumer & Industrial - Electrical Distribution

3. Siemens Energy & Automation, Inc.

4. SquareD; a brand of Schneider Electric

B. Type GD, General Duty, Single Throw, 240-VAC, 800 A and Smaller:
UL 98 and NEMA KS 1, horsepower rated, with cartridge fuse interiors to accommodate indicated fuses, lockable handle with capability to accept two padlocks, and interlocked with cover in closed position.

C. Type HD, Heavy Duty, Single Throw, 240 and 600-VAC, 1200 A and Smaller:
UL 98 and NEMA KS 1, horsepower rated, with clips or bolt pads to accommodate indicated fuses, lockable handle with capability to accept three padlocks, and interlocked with cover in closed position.

D. Type HD, Heavy Duty, Six Pole, Single Throw, 240 and 600-VAC, 200 A and Smaller:
UL 98 and NEMA KS 1, horsepower rated, with clips or bolt pads to accommodate indicated fuses, lockable handle with capability to accept three padlocks, and interlocked with cover in closed position.

E. Type HD, Heavy Duty, Double Throw, 240 and 600-VAC, 1200 A and Smaller:
UL 98 and NEMA KS 1, horsepower rated, with clips or bolt pads to accommodate indicated fuses, lockable handle with capability to accept three padlocks, and interlocked with cover in closed position.

F. Accessories:

1. Equipment Ground Kit: Internally mounted and labeled for copper and aluminum ground conductors.

2. Neutral Kit:
Internally mounted; insulated, capable of being grounded and bonded; labeled for copper and aluminum neutral conductors.

3. Class R Fuse Kit: Provides rejection of other fuse types when Class R fuses are specified

4. Lugs: Suitable for number, size, and conductor material

5. Service Rated Switches: Labeled for use as service equipment.

2.2 MOLDED-CASE CIRCUIT BREAKERS

A. Basis of Design Product:

Subject to compliance with requirements, provide product indicated on Drawings or/a comparable product by one of the following:

1. Eaton Electrical Inc.; Cutler-Hammer Business Unit

2. General Electric Company; GE Consumer & Industrial - Electrical Distribution

3. Siemens Energy & Automation, Inc.

4. Square D; a brand of Schneider Electric

B. General Requirements:
Comply with UL 489, NEMA AB 1, and NEMA AB 3, with interrupting capacity to comply with available fault currents.

C. Thermal-Magnetic Circuit Breakers:
Inverse time-current element for low level overloads and instantaneous magnetic trip element for short circuits. Adjustable magnetic trip setting for circuit-breaker frame sizes 250 A and larger.

D. Electronic Trip Circuit Breakers:
Field replaceable rating plug, RMS sensing, with the following field adjustable settings:

1. Instantaneous trip

2. Long- and short-time pickup levels

3. Long- and short-time adjustments

4. Ground-fault pickup level, time delay, and I^2t response

E. Current-Limiting Circuit Breakers:
Frame sizes 400 A and smaller, and let-through ratings less than NEMA FU 1, RK-5

F. Features and Accessories:

1. Standard frame sizes, trip ratings, and number of poles.

2. Lugs: Suitable for number, size, trip ratings, and conductor material

3. Application Listing:
Appropriate for application; Type SWD for switching fluorescent lighting loads

4. Ground-Fault Protection:
Comply with UL 1053; integrally mounted, self-powered type with mechanical ground-fault indicator; relay with adjustable pickup and time-delay settings, push-to- test feature, internal memory, and shunt trip unit; and three phase, zero sequence current transformer/sensor.

5. Shunt Trip: Trip coil energized from separate circuit, with coil-clearing contact

6. Auxiliary Contacts:
Two SPDT switches with "a" and "b" contacts; "a" contacts mimic circuit breaker contacts, "b" contacts operate in reverse of circuit breaker contacts.

7. Alarm Switch: One NC contact that operates only when circuit breaker has tripped

2.3 ENCLOSURES

A. Enclosed Switches and Circuit Breakers:
NEMA AB 1, NEMA KS 1, NEMA 250, and UL 50, to comply with environmental conditions at installed location.

1. Indoor, Dry and Clean Locations: NEMA 250, Type 1

2. Outdoor Locations: NEMA 250, Type 3R

3. Kitchen Wash Down Areas: NEMA 250, Type 4X

4. Other Wet or Damp, Indoor Locations: NEMA 250, Type 3

5. Indoor Locations Subject to Dust, Falling Dirt, and Dripping Noncorrosive Liquids: NEMA 250, Type 12

PART 3 - EXECUTION

3.1 INSTALLATION

A. Install individual wall mounted switches and circuit breakers with tops at uniform height unless otherwise indicated.

B. Temporary Lifting Provisions:
Remove temporary lifting eyes, channels, and brackets and temporary blocking of moving parts from enclosures and components.

C. Install fuses in fusible devices.

D. Comply with NECA 1.

3.2 IDENTIFICATION

A. Comply with requirements in Division 26 Section "Identification for Electrical Systems."

1. Identify field installed conductors, interconnecting wiring, and components; provide warning signs.

2. Label each enclosure with engraved metal or laminated-plastic nameplate.

3.3 FIELD QUALITY CONTROL

A. Perform tests and inspections.

B. Acceptance Testing Preparation:

1. Test insulation resistance for each enclosed switch and circuit breaker, component, connecting supply, feeder, and control circuit.

2. Test continuity of each circuit.

C. Tests and Inspections:

1. Perform each visual and mechanical inspection and electrical test stated in NETA Acceptance Testing Specification. Certify compliance with test parameters.

2. Correct malfunctioning units on-site, where possible, and retest to demonstrate compliance; otherwise, replace with new units and retest.

D. Enclosed switches and circuit breakers will be considered defective if they do not pass tests and inspections.

E. Prepare test and inspection reports, including a certified report that identifies enclosed switches and circuit breakers and that describes scanning results. Include notation of deficiencies detected, remedial action taken, and observations after remedial action.

END OF SECTION

PART 1 - GENERAL

1.1 DESCRIPTION:

A. This section specifies the furnishing, installation, and connection of the interior lighting systems. The terms "lighting fixture," "fixture," and "luminaire" are used interchangeably.

1.2 RELATED WORK

A. Section 017419, CONSTRUCTION WASTE MANAGEMENT:

B. Disposal of lamps.

C. Section 024100, DEMOLITION:

D. Removal and disposal of lamps and ballasts.

E. Section 130541, SEISMIC RESTRAINT REQUIREMENTS FOR NON-STRUCTURAL COMPONENTS:

F. Requirement for seismic restraint for nonstructural components.

G. Section 260511, REQUIREMENTS FOR ELECTRICAL INSTALLATIONS:

H. Requirements that apply to all sections of Division 26.

I. Section 260519, LOW-VOLTAGE ELECTRICAL POWER CONDUCTORS AND CABLES:

J. Low-voltage conductors.

K. Section 260526, GROUNDING AND BONDING FOR ELECTRICAL SYSTEMS:

L. Requirements for personnel safety and to provide a low impedance path to ground for possible ground fault currents.

M. Section 262726, WIRING DEVICES:

N. Wiring devices used for control of the lighting systems.

1.3 QUALITY ASSURANCE

A. Quality Assurance shall be in accordance with Paragraph, QUALIFICATIONS (PRODUCTS AND SERVICES) in Section 260511, REQUIREMENTS FOR ELECTRICAL INSTALLATIONS.

1.4 SUBMITTALS

A. Submit in accordance with Paragraph, SUBMITTALS in Section 260511, REQUIREMENTS FOR ELECTRICAL INSTALLATIONS, and the following requirements:

1. Shop Drawings:

   a. Submit the following information for each type of lighting fixture designated on the LIGHTING FIXTURE SCHEDULE, arranged in order of lighting fixture designation.

   b. Material and construction details include information on housing and optics system.

   c. Physical dimensions and description.

   d. Wiring schematic and connection diagram.

   e. Installation details.

   f. Energy efficiency data.

   g. Lamp data including lumen output (initial and mean), color rendition index (CRI), rated life (hours), and color temperature (degrees Kelvin).

   h. For LED lighting fixtures, submit US DOE LED Lighting Facts label, and IES L70 rated life.

2. Manuals:

   a. Submit, simultaneously with the shop drawings, complete maintenance and operating manuals, including technical data sheets, wiring diagrams, and information for ordering replacement parts.

   b. If changes have been made to the maintenance and operating manuals originally submitted, submit updated maintenance and operating manuals two weeks prior to the final inspection.

3. Certifications:

4. Two weeks prior to final inspection, submit the following.

   a. Certification by the Contractor that the interior lighting systems have been properly installed and tested.

1.5 APPLICABLE PUBLICATIONS

A. Publications listed below (including amendments, addenda, revisions, supplements, and errata) form a part of this specification to the extent referenced. Publications are referenced in the text by designation only.

B. American Society for Testing and Materials (ASTM):
   C635/C635M REV A-13 Manufacture, Performance, and Testing of Metal Suspension Systems for Acoustical Tile and Lay-in Panel Ceilings

C. Environmental Protection Agency (EPA):
40 CFR 261 Identification and Listing of Hazardous Waste

D. Federal Communications Commission (FCC):
CFR Title 47, Part 15 Radio Frequency Devices

E. Illuminating Engineering Society of North America (IESNA):
LM-79-08 Electrical and Photometric Measurements of Solid-State Lighting Products
LM-80-15 Measuring Lumen Maintenance of LED Light Sources
LM-82-12 Characterization of LED Light Engines and LED Lamps for Electrical and Photometric Properties as a Function of Temperature

F. Institute of Electrical and Electronic Engineers (IEEE):
C62.41-91(R1995) Surge Voltages in Low Voltage AC Power Circuits

G. International Code Council (ICC):
IBC-15 International Building Code

H. National Electrical Manufacturer's Association (NEMA):
C78.376-14 Chromaticity of Fluorescent Lamps
C82.1-04(R2015) Lamp Ballasts – Line Frequency Fluorescent Lamp Ballasts
C82.2-02(R2016) Method of Measurement of Fluorescent Lamp Ballasts
C82.4-17 Lamp Ballasts - Ballasts for High-Intensity Discharge and Low-Pressure Sodium (LPS) Lamps (Multiple-Supply Type)

C82.11-17 Lamp Ballasts - High Frequency Fluorescent Lamp Ballasts
LL 9-11 Dimming of T8 Fluorescent Lighting Systems
SSL 1-16 Electronic Drivers for LED Devices, Arrays, or Systems

I. National Fire Protection Association (NFPA):
70-17 National Electrical Code (NEC)
101-18 Life Safety Code

J. Underwriters Laboratories, Inc. (UL):
496-17 Lampholders
844-12 Luminaires for Use in Hazardous (Classified) Locations
924-16 Emergency Lighting and Power Equipment
1598-08 Luminaires
1574-04..... Track Lighting Systems
2108-15... Low-Voltage Lighting Systems
8750-15... Light Emitting Diode (LED) Light Sources for Use in Lighting Products

PART 2 - PRODUCTS

2.1 LIGHTING FIXTURES

A. Shall be in accordance with NFPA, UL, as shown on drawings, and as specified.

B. Sheet Metal:

1. Shall be formed to prevent warping and sagging. Housing, trim and lens frame shall be true, straight (unless intentionally curved), and parallel to each other as designed.

2. Wire ways and fittings shall be free of burrs and sharp edges and shall accommodate internal and branch circuit wiring without damage to the wiring.

3. When installed, any exposed fixture housing surface, trim frame, door frame, and lens frame shall be free of light leaks.

4. Hinged door frames shall operate smoothly without binding. Latches shall function easily by finger action without the use of tools.

C. Ballasts and lamps shall be serviceable while the fixture is in its normally installed position. Ballasts shall not be mounted to removable reflectors or wire way covers unless so specified.

D. Recessed fixtures mounted in an insulated ceiling shall be listed for use in insulated ceilings.

E. Mechanical Safety:
Lighting fixture closures (lens doors, trim frame, hinged housings, etc.) shall be retained in a secure manner by captive screws, chains, aircraft cable, captive hinges, or fasteners such that they cannot be accidentally dislodged during normal operation or routine maintenance.

F. Metal Finishes:

1. The manufacturer shall apply standard finish (unless otherwise specified) over a corrosion-resistant primer, after cleaning to free the metal surfaces of rust, grease, dirt and other deposits. Edges of pre-finished sheet metal exposed during forming, stamping or shearing processes shall be finished in a similar corrosion resistant manner to match the adjacent surface(s). Fixture finish shall be free of stains or evidence of rusting, blistering, or flaking, and shall be applied after fabrication.

2. Interior light reflecting finishes shall be white with not less than 85 percent reflectance, except where otherwise shown on the drawing.

3. Exterior finishes shall be as shown on the drawings.

G. Lighting fixtures shall have a specific means for grounding metallic wire ways and housings to an equipment grounding conductor.

H. Light Transmitting Components for Fluorescent Fixtures:

1. Shall be 100 percent virgin acrylic.

2. Flat lens panels shall have not less than 3 mm (1/8 inch) of average thickness.

3. Unless otherwise specified, lenses, reflectors, diffusers, and louvers shall be retained firmly in a metal frame by clips or clamping ring in such a manner as to allow expansion and contraction without distortion or cracking.

I. Lighting fixtures in hazardous areas shall be suitable for installation in Class and Division areas as defined in NFPA 70.

J. Compact fluorescent fixtures shall be manufactured specifically for compact fluorescent lamps with ballast integral to the fixture. Assemblies designed to retrofit incandescent fixtures are prohibited except when specifically indicated for renovation of existing fixtures.

2.2 EMERGENCY LIGHTING UNIT

A. Complete, self-contained unit with batteries, battery charger, one or more local or remote lamp heads with lamps, under-voltage relay, and test switch.

1. Enclosure:
Shall be impact resistant thermoplastic. Enclosure shall be suitable for the environmental conditions in which installed.

2. Lamp Heads: Horizontally and vertically adjustable, mounted on the face of the unit, except where otherwise indicated.

3. Lamps: Shall be sealed beam LED, rated not less than 12 watts at the specified DC voltage.

4. Battery: Shall be maintenance free nickel cadmium. Minimum normal life shall be minimum of 10 years.

5. Battery Charger:
Dry type full-wave rectifier with charging rates to maintain the battery in fully-charged condition during normal operation, and to automatically recharge the battery within 12 hours following a 1-1/2 hour continuous discharge.

6. Integral Self-Test:
Automatically initiates test of unit emergency operation at required intervals. Test failure is annunciated by an integral audible alarm and a flashing LED.

2.3 LED EXIT LIGHT FIXTURES

A. Exit light fixtures shall meet applicable requirements of NFPA and UL.

B. Housing and door shall be die-cast aluminum.

C. For general purpose exit light fixtures, door frame shall be hinged, with latch. For vandal-resistant exit light fixtures, door frame shall be secured with tamper-resistant screws.

D. Finish shall be satin or fine-grain brushed aluminum.

E. There shall be no radioactive material used in the fixtures.

F. Fixtures:

1. Inscription panels shall be cast or stamped aluminum a minimum of 2.25 mm (0.090 inch) thick, stenciled with 150 mm (6 inch) high letters, baked with red color stable plastic or fiberglass. Lamps shall be luminous Light Emitting Diodes (LED) mounted in center of letters on red color stable plastic or fiberglass.

2. Double-Faced Fixtures: Provide double-faced fixtures where required or as shown on drawings.

3. Directional Arrows:
Provide directional arrows as part of the inscription panel where required or as shown on drawings. Directional arrows shall be the "chevron-type" of similar size and width as the letters and meet the requirements of NFPA 101.

G. Voltage: Multi-voltage (120 – 277V)

2.4 LED LIGHT FIXTURES

A. General:

1. LED light fixtures shall be in accordance with IES, NFPA, UL, as shown on the drawings, and as specified.

2. LED light fixtures shall be Reduction of Hazardous Substances (RoHS)-compliant.

3. LED drivers shall include the following features unless otherwise indicated:

a. Minimum efficiency: 85% at full load.

b. Minimum Operating Ambient Temperature: -20˚ C. (-4˚ F.)

c. Input Voltage: 120 - 277V (±10%) at 60 Hz.

d. Integral short circuit, open circuit, and overload protection.

e. Power Factor: ≥ 0.95.

f. Total Harmonic Distortion: ≤ 20%.

g. Comply with FCC 47 CFR Part 15.

4. LED modules shall include the following features unless otherwise indicated:

a. Comply with IES LM-79 and LM-80 requirements.

b. Minimum CRI 80 and color temperature 3000˚ K unless otherwise specified in LIGHTING FIXTURE SCHEDULE.

c. Minimum Rated Life: 50,000 hours per IES L70.

d. Light output lumens as indicated in the LIGHTING FIXTURE SCHEDULE.

B. LED Downlights:

1. Housing, LED driver, and LED module shall be products of the same manufacturer.

C. LED Troffers:

1. LED drivers, modules, and reflector shall be accessible, serviceable, and replaceable from below the ceiling.

2. Housing, LED driver, and LED module shall be products of the same manufacturer.

PART 3 - EXECUTION

3.1 INSTALLATION

A. Installation shall be in accordance with the NEC, manufacturer's instructions, and as shown on the drawings or specified.

B. Align, mount, and level the lighting fixtures uniformly.

C. Wall-mounted fixtures shall be attached to the studs in the walls, or to a 20-gauge metal backing plate that is attached to the studs in the walls. Lighting fixtures shall not be attached directly to gypsum board.

D. Lighting Fixture Supports:

1. Shall provide support for all of the fixtures. Supports may be anchored to channels of the ceiling construction, to the structural slab or to structural members within a partition, or above a suspended ceiling.

2. Shall maintain the fixture positions after cleaning and re-lamping.

3. Shall support the lighting fixtures without causing the ceiling or partition to deflect.

4. Hardware for recessed lighting fixtures:

a. All fixture mounting devices connecting fixtures to the ceiling system or building structure shall have a capacity for a horizontal force of 100 percent of the fixture weight and a vertical force of 400 percent of the fixture weight.

b. Mounting devices shall clamp the fixture to the ceiling system structure (main grid runners or fixture framing cross runners) at four points in such a manner as to resist spreading of these supporting members. Each support point device shall utilize a screw or approved hardware to "lock" the fixture housing to the ceiling system, restraining the fixture from movement in any direction relative to the ceiling. The screw (size No. 10 minimum) or approved hardware shall pass through the ceiling member (T-bar, channel or spline), or it may extend over the inside of the flange of the channel (or spline) that faces away from the fixture, in a manner that prevents any fixture movement.

c. In addition to the above, the following is required for fixtures exceeding 9 kg (20 pounds) in weight.

i. Where fixtures mounted in ASTM Standard C635 "Intermediate Duty" and "Heavy Duty" ceilings and weigh between 9 kg and 25 kg (20 pounds and 56 pounds), provide two 12-gauge safety hangers hung slack between diagonal corners of the fixture and the building structure.

ii. Where fixtures weigh over 25 kg (56 pounds), they shall be independently supported from the building structure by approved hangers. Two-way angular bracing of hangers shall be provided to prevent lateral motion.

d. Where ceiling cross runners are installed for support of lighting fixtures, they must have a carrying capacity equal to that of the main ceiling runners and be rigidly secured to the main runners.

5. Surface mounted lighting fixtures:

a. Fixtures shall be bolted against the ceiling independent of the outlet box at four points spaced near the corners of each unit. The bolts (or stud-clips) shall be minimum 6 mm (1/4 inch) bolt, secured to main ceiling runners and/or secured to cross runners. Non-turning studs may be attached to the main ceiling runners and cross runners with special non-friction clip devices designed for the purpose, provided they bolt through the runner, or are also secured to the building structure by 12-gauge safety hangers. Studs or bolts securing fixtures weighing in excess of 25 kg (56 pounds) shall be supported directly from the building structure.

b. Where ceiling cross runners are installed for support of lighting fixtures, they must have a carrying capacity equal to that of the main ceiling runners and be rigidly secured to the main runners.

c. Fixtures less than 6.8 kg (15 pounds) in weight and occupying less than 3715 sq cm (two square feet) of ceiling area may, when designed for the purpose, be supported directly from the outlet box when all the following conditions are met.

i. Screws attaching the fixture to the outlet box pass through round holes (not key-hole slots) in the fixture body.

ii. The outlet box is attached to a main ceiling runner (or cross runner) with approved hardware.

iii. The outlet box is supported vertically from the building structure.

d. Fixtures mounted in open construction shall be secured directly to the building structure with approved bolting and clamping devices.

6. Single or double pendant-mounted lighting fixtures:

a. Each stem shall be supported by an approved outlet box mounted swivel joint and canopy which holds the stem captive and provides spring load (or approved equivalent) dampening of fixture oscillations. Outlet box shall be supported vertically from the building structure.

7. Outlet boxes for support of lighting fixtures (where permitted) shall be secured directly to the building structure with approved devices or supported vertically in a hung ceiling from the building structure with a nine gauge wire hanger, and be secured by an approved device to a main ceiling runner or cross runner to prevent any horizontal movement relative to the ceiling.

E. Furnish and install the new lamps as specified for all lighting fixtures installed under this project, and for all existing lighting fixtures reused under this project.

F. The electrical and ceiling trades shall coordinate to ascertain that approved lighting fixtures are furnished in the proper sizes and installed with the proper devices (hangers, clips, trim frames, flanges, etc.), to match the ceiling system being installed.

G. Bond lighting fixtures to the grounding system as specified in Section 260526, GROUNDING AND BONDING FOR ELECTRICAL SYSTEMS.

H. At completion of project, replace all defective components of the lighting fixtures at no cost to the Government.

I. Dispose of lamps per requirements of Section 017419, CONSTRUCTION WASTE MANAGEMENT, and Section 024100, DEMOLITION.

3.2 ACCEPTANCE CHECKS AND TESTS

J. Perform the following:

1. Visual Inspection:

a. Verify proper operation by operating the lighting controls.

b. Visually inspect for damage to fixtures, lenses, reflectors, diffusers, and louvers. Clean fixtures, lenses, reflectors, diffusers, and louvers that have accumulated dust, dirt, or fingerprints during construction.

2. Electrical tests:

a. Exercise dimming components of the lighting fixtures over full range of dimming capability by operating the control devices(s) in the presence of the //Resident Engineer// //COTR//. Observe for visually detectable flicker over full dimming range and replace defective components at no cost to the Government.

b. Burn-in all lamps that require specific aging period to operate properly, prior to occupancy by Government. Burn-in period to be 40 hours minimum, unless specifically recommended otherwise by the lamp manufacturer. Burn-in dimmed fluorescent and compact fluorescent lamps for at least 100 hours at full voltage, unless specifically recommended otherwise by the lamp manufacturer. Replace any lamps and ballasts which fail during burn-in.

3.3 FOLLOW-UP VERIFICATION

A. Upon completion of acceptance checks and tests, the Contractor shall show by demonstration in service that the lighting systems are in good operating condition and properly performing the intended function.

END OF SECTION

PART 1 - GENERAL

1.1 DESCRIPTION

A. This section specifies the furnishing, installation, and connection of exterior fixtures, poles, and supports. The terms "lighting fixtures", "fixture" and "luminaire" are used interchangeably.

1.2 RELATED WORK

A. Section 033000, CAST-IN-PLACE CONCRETE.

B. Section 090600, SCHEDULE FOR FINISHES:
Finishes for exterior light poles and luminaires.

C. Section 260511, REQUIREMENTS FOR ELECTRICAL INSTALLATIONS:
General electrical requirements and items that are common to more than one section of Division 26.

D. Section 260519, LOW-VOLTAGE ELECTRICAL POWER CONDUCTORS AND CABLES (600 VOLTS AND BELOW):
Low voltage power and lighting wiring.

E. Section 260526, GROUNDING AND BONDING FOR ELECTRICAL SYSTEMS:
Requirements for personnel safety and to provide a low impedance path for possible ground fault currents.

F. Section 260533, RACEWAY AND BOXES FOR ELECTRICAL SYSTEMS:
Conduits, fittings, and boxes for raceway systems.

G. Section 260541, UNDERGROUND ELECTRICAL CONSTRUCTION: Underground handholes and conduits.

H. Section 260923, LIGHTING CONTROLS: Controls for exterior lighting.

1.3 QUALITY ASSURANCE

A. Quality Assurance shall be in accordance with Paragraph, QUALIFICATIONS (PRODUCTS AND SERVICES) in Section 26 05 11, REQUIREMENTS FOR ELECTRICAL INSTALLATIONS.

1.4 SUBMITTALS

A. Submit in accordance with Paragraph, SUBMITTALS in Section 260511, REQUIREMENTS FOR ELECTRICAL INSTALLATIONS, and the following requirements:

1. Shop Drawings:

a. Submit the following information for each type of lighting fixture designated on the LIGHTING FIXTURE SCHEDULE, arranged in order of lighting fixture designation.

b. Material and construction details include information on housing and optics system.

c. Physical dimensions and description.

d. Wiring schematic and connection diagram.

e. Installation details.

f. Energy efficiency data.

g. Photometric data based on laboratory tests complying with IES Lighting Measurements testing and calculation guides.

h. Lamp data including lumen output (initial and mean), color rendition index (CRI), rated life (hours), and color temperature (degrees Kelvin).

i. Ballast data including ballast type, starting method, ambient temperature, ballast factor, sound rating, system watts, and total harmonic distortion (THD).

j. For LED lighting fixtures, submit US DOE LED Lighting Facts label, and IES L70 rated life.

k. Submit site plan showing all exterior lighting fixtures with fixture tags consistent with Lighting Fixture Schedule as shown on drawings. Site plan shall show computer generated point–by-point illumination calculations. Include lamp lumen and light loss factors used in calculations.

2. Manuals:

a. Submit, simultaneously with the shop drawings, complete maintenance and operating manuals, including technical data sheets, wiring diagrams, and information for ordering replacement parts.

b. If changes have been made to the maintenance and operating manuals originally submitted, submit updated maintenance and operating manuals two weeks prior to the final inspection.

3. Certifications:

4. Two weeks prior to final inspection, submit the following.

a. Certification by the Contractor that the exterior lighting systems have been properly installed and tested.

1.5 APPLICABLE PUBLICATIONS

A. Publications listed below (including amendments, addenda, revisions, supplements, and errata) form a part of this specification to the extent referenced. Publications are referenced in the text by designation only.

B. American Concrete Institute (ACI): 318-14 Building Code Requirements for Structural Concrete

C. American National Standards Institute (ANSI):
H35.1/H35 1M-17 American National Standard Alloy and Temper Designation Systems for Aluminum

D. American Society for Testing and Materials (ASTM):
A123/A123M-17 Zinc (Hot-Dip Galvanized) Coatings on Iron and Steel Products
A153/A153M-16 Zinc Coating (Hot-Dip) on Iron and Steel Hardware
B108/B108M-15 Aluminum-Alloy Permanent Mold Castings
C1089-13 Spun Cast Prestressed Concrete Poles

E. Illuminating Engineering Society of North America (IESNA):
HB-9-00 Lighting Handbook
RP-8-14 Roadway Lighting
LM-72-97(R2010) Directional Positioning of Photometric Data
LM-79-08 Approved Method for the Electrical and Photometric Measurements of Solid-State Lighting Products

LM-80-15 Approved Method for Measuring Luminous Flux and Color Maintenance of LED Packages, Arrays and Modules

TM-15-11 Luminaire Classification System for Outdoor Luminaires

F. National Electrical Manufacturers Association (NEMA):
C81.61-17 Electrical Lamp Bases – Specifications for Bases (Caps) for Electric Lamps

C136.3-14 For Roadway and Area Lighting Equipment – Luminaire Attachments
ICS 2-00(R2005) Controllers, Contactors and Overload Relays Rated 600 Volts
ICS 6-93(R2016) Enclosures

G. National Fire Protection Association (NFPA):
70-17 National Electrical Code (NEC)
101-18 Life Safety Code

H. Underwriters Laboratories, Inc. (UL):
496-17 Lamp holders
773-16 Plug-In, Locking Type Photocontrols for Use with Area Lighting
773A-16 Nonindustrial Photoelectric Switches for Lighting Control
1598-08 Luminaires
8750-15..... Light Emitting Diode (LED) Equipment for Use in Lighting Products

1.6 DELIVERY, STORAGE, AND HANDLING

A. Provide manufacturer's standard provisions for protecting pole finishes during transport, storage, and installation. Do not store poles on ground. Store poles so they are at least 305 mm (12 inches) above ground level and growing vegetation. Do not remove factory-applied pole wrappings until just before installing pole.

PART 2 - PRODUCTS

2.1 GENERAL REQUIREMENTS

A. Luminaires, materials and equipment shall be in accordance with NEC, UL, ANSI, and as shown on the drawings and specified.

2.2 LUMINAIRES

A. Luminaires shall be weatherproof, heavy duty, outdoor types designed for efficient light utilization, adequate dissipation of lamp and ballast heat, and safe cleaning and re-lamping.

B. Illumination distribution patterns, BUG ratings and cutoff types as defined by the IESNA shall be as shown on the drawings.

C. Incorporate ballasts in the luminaire housing, except where otherwise shown on the drawings.

D. Lenses shall be frame-mounted, heat-resistant, borosilicate glass, with prismatic refractors, unless otherwise shown on the drawings. Attach the frame to the luminaire housing by hinges or chain. Use heat and aging-resistant, resilient gaskets to seal and cushion lenses and refractors in luminaire doors.

E. Pre-wire internal components to terminal strips at the factory.

F. Bracket-mounted luminaires shall have leveling provisions and clamp-type adjustable slip-fitters with locking screws.

G. Materials shall be rustproof. Latches and fittings shall be non-ferrous metal.

H. Provide manufacturer's standard finish, as scheduled on the drawings. Where indicated on drawings, match finish process and color of pole or support materials. Where indicated on drawings, provide finishes as indicated in Section 090600, SCHEDULE FOR FINISHES.

I. Luminaires shall carry factory labels, showing complete, specific lamp and ballast information.

2.3 LAMPS

A. Install the proper lamps in every luminaire installed as shown on the drawings.

B. Lamps shall be general-service, LED outdoor lighting types.

C. LED sources shall meet the following requirements:

1. Operating temperature rating shall be up to 65 degrees C (150 degrees F).

2. Correlated Color Temperature (CCT): 5700K

3. Color Rendering Index (CRI): ≥ 85.

4. The manufacturer shall have performed reliability tests on the LEDs luminaires complying with Illuminating Engineering Society (IES) LM79 for photometric performance and LM80 for lumen maintenance and L70 life.

D. Mercury vapor lamps shall not be used.

2.4 LED DRIVERS

A. LED drivers shall meet the following requirements:

1. Drivers shall have a minimum efficiency of 85%.

2. Input Voltage: 120 to 480 (±10%) volt.

3. Power Supplies: Class I or II output.

4. Surge Protection:
The system must survive 250 repetitive strikes of "C Low" (C Low: 6kV/1.2 x 50 µs, 10kA/8 x 20 µs) waveforms at 1-minute intervals with less than 10% degradation in clamping voltage. "C Low" waveforms are as defined in IEEE/ASNI C62.41.2-2002, Scenario 1 Location Category C.

5. Power Factor (PF): ≥ 0.90.

6. Total Harmonic Distortion (THD): ≤ 20%.

7. Comply with FCC Title 47 CFR Part 18 Non-consumer RFI/EMI Standards.

8. Drivers shall be reduction of hazardous substances (ROHS)-compliant.

2.5 EXISTING LIGHTING SYSTEMS

A. For modifications or additions to existing lighting systems, the new components shall be compatible with the existing systems.

PART 3 - EXECUTION

3.1 INSTALLATION

A. Install lighting in accordance with the NEC, as shown on the drawings, and in accordance with manufacturer's recommendations.

B. Install lamps in each luminaire.

C. Adjust luminaires that require field adjustment or aiming.

3.2 GROUNDING

A. Ground noncurrent-carrying parts of equipment, including metal poles, luminaires, mounting arms, brackets, and metallic enclosures, as specified in Section 260526, GROUNDING AND BONDING FOR ELECTRICAL SYSTEMS. Where copper grounding conductor is connected to a metal other than copper, provide specially treated or lined connectors suitable and listed for this purpose.

3.3 ACCEPTANCE CHECKS AND TESTS

A. Verify operation after installing luminaires and energizing circuits.

END OF SECTION

PART 1 GENERAL

1.1 INTRODUCTION

A. The United States Virgin Islands Telecommunications Specifications, hereinafter referred to as VITS, shall be used by Virgin Islands Agencies, Architects, Design Engineers and Low Voltage Telecommunications Contractors (LVLTC) for the design and construction of all Information Transport Systems installed in Territory facilities. VITS is based upon the most current available literature, codes, standards and industry accepted practices available at the time of publication.

B. The VITS establishes a strategic direction for the physical connection of communications devices in US Virgin Islands facilities. A properly designed and constructed telecommunications system shall be adaptable to change over the life of the building.

C. The design and construction of the telecommunications system shall:

a. Provide telecommunications architecture based on recognized standards to support efficient, long-lasting, cost-effective operations.

b. Reduce the amount of time required to install new networks or to reconfigure existing local area networks.

c. Provide the flexibility to operate multiple high bandwidth technologies on a single structured cabling system.

d. Eliminate the cost of installing non-standard, proprietary, vendor-specific cabling by providing standards-based cabling systems that will support a wide variety of equipment.

e. Improve network manageability and facilitate automated cabling system management through the use of uniform and industry standard identification and numbering schemes.

f. Allow for the growth of high speed, high bandwidth Local Area Networks (LANs) and Wide Area Networks (WANs) that may be required by future specialized applications.

1.2 STANDARDS:

A. Effective telecommunications and networking can only be accomplished by adherence to standards. Additionally, cabling infrastructure costs cannot be contained without adherence to sound installation and management practices. To ensure that the future telecommunications and connectivity needs of agencies are met in a cost-effective manner, the VITS confirms the US Virgin Island's support for ANSI/TIA/EIA and IEEE standards for telecommunications.

B. American National Standards Institute (ANSI) approves standards as having been properly developed.

C. ANSI/TIA/EIA-526, Optical Fiber Systems Test Procedures.

D. ANSI/TIA/EIA-568, Commercial Building Telecommunications Cabling Standard.

E. ANSI/EIA/TIA-569, Commercial Building Standard for Telecommunications Pathways and Spaces.

F. ANSI/TIA/EIA-606A, Administration Standard for the Telecommunications Infrastructure of Commercial Buildings.

G. ANSI/TIA/EIA-607, Commercial Building Grounding and Bonding Requirements for Telecommunications.

H. IEEE 802.3, Local Area Network Ethernet Standard.

I. Building Industry Consulting Service International, Inc. (BICSI) Telecommunications Distribution Methods Manual (TDMM).

J. NFPA 70, National Electrical Code, Article 250, Grounding; Article 645, Information Technology Equipment; Article 770, Optical Fiber Cables and Raceways; Chapter 8, Communications Systems.

K. The VITS provides the minimum recommendations for telecommunications in Territory facilities. The VITS addresses the physical pathways, media and cable administration practices.

1.3 STRUCTURED CABLING SYSTEM (SCS):

A. The US Virgin Islands requires following the general cabling industry practice of using an SCS. Other cabling systems may be installed in addition to the SCS, but <u>as a minimum</u> the Territory requires that a SCS be installed. A properly designed SCS allows the designer and LVLTC to fulfill the telecommunications needs without knowing specifically what electronic equipment will be utilized. The SCS is geared for long-term stability and flexibility and is based on the idea of cabling buildings once. The SCS approach allows the cable and telecommunications outlets to remain unchanged as connections and services vary.

B. There are typically eight major components of the SCS as follows:

1. Service Entrance Facilities

2. Main Equipment Room

3. Telecommunications Room

4. Backbone Cabling

5. Horizontal Cabling

6. Work Area Outlets

7. Grounding and Bonding

8. Administration and Labeling.

1.4 SCOPE:

A. The US Virgin Islands requires a uniform cabling plan in each building for voice, data, image, and video distribution to allow for flexible changes, office renovations, equipment migrations and constant upgrades. This cabling system shall be based on industry standard SCS's that are not proprietary and conform to current ANSI/TIA/EIA Commercial Cabling Standards.

1.5 QUALIFICATIONS:

A. Telecommunications Installer:

1. The telecommunications installation contractor shall be licensed in the US Virgin Islands as a Telecommunications Class or Unrestricted Class Low-Voltage Licensed (LVL) Contractor.

2. The Low-Voltage Licensed Telecommunications Contractor (LVLTC) shall be based in the US Virgin Islands.

3. The installation of cable, equipment, terminations and associated services shall be performed by a company that is currently a Manufacturer's Certified Structured Cabling System installer in good standing with minimum of (5) years of experience on similar systems.

4. The installation company shall have a Regional Communications Distribution Designer (RCDD) on staff performing the role of Project Manager, be available for consultation and attend project meetings.

5. A LVLTC and BICSI certified installer shall be contracted directly by the General Contractor and be on-site as the installation manager. **The electrical contractor shall not perform or share the telecommunications work or subcontract the work to a LVLTC.**

6. The LVLTC Project Manager shall act as a single point of contact for activities regarding this project. The Project Manager shall be required to make on-site decisions regarding the scope of the work and changes required by the work. The Project Manager shall be the jobsite whenever work is being performed or workers are present.

7. The Project Manager shall notify the appropriate BIT/RCDD, telecommunications system designer and the Agency's Inspector of change requests and inspections. Final approval for change requests must be obtained prior to commencement of work. Scheduling and coordinating inspections between the LVLTC, the BIT/RCDD and the Agency's Inspector is critical.

8. The selected LVLTC shall be fully capable and experienced in the installation of telecommunications distribution systems and have a minimum of five (5) years of experience installing SCS's. To ensure the system has continued support, the Territory/BIT/Agency will contract only with a LVLTC having a successful history of SCS installations.

9. The LVLTC shall have an RCDD on staff that will ultimately be responsible for this project. The RCDD shall have enough experience in this type project and be able to lend adequate technical support to the field forces during installation, during the warranty period and extended warranty periods or maintenance contracts. The credentials (current BICSI certification stamp) of the responsible RCDD must be attached to the Specifications response for evaluation by the Territory/Agency/BIT. The Territory/Agency/BIT reserves the right to require the LVLTC to assign another RCDD whom, in the Territory/Agency/BIT's opinion, possesses the necessary skills and experience required.

10. The Territory may, with full cooperation of the LVLTC, visit installations to observe equipment operations and consult with references. Specified visits and discussion shall be arranged through the LVLTC; however, the LVLTC personnel shall not be present during discussions with references. The LVLTC must provide a minimum of three (3) reference accounts at which similar work, both in scope and design, have been completed by the LVLTC within the last two (2) years.

11. In the event multiple Vendors submit a joint response, a single Vendor shall be identified as the Prime Vendor. Prime Vendor responsibilities shall include performing overall project administration and serving as a focal point for the Territory to coordinate and monitor plans, schedules status information and administer changes required. The Prime Vendor shall remain responsible for performing tasks associated with installation and implementation of the entire telecommunications project.

1.6 QUALITY ASSURANCE:

A. The LVLTC shall install work in accordance with the latest VITS and the latest BICSI Cabling Installation Manual.

B. The Owner's Representative is responsible for coordinating the required inspections found in the VITS.

1.7 SUBMITTALS:

A. The LVLTC shall submit shop drawings and product data to the BIT/RCDD and designer for review and approval prior to commencement of work.

B. The LVLTC shall indicate installation details, cable routing, system configuration, and outlet numbering on shop drawings.

C. The LVLTC shall submit appropriate product data for each component to be supplied.

D. The LVLTC shall submit manufacturer's installation instructions.

E. The LVLTC shall submit three copies of a complete, bound, project record manual consisting of the following:

1. Product cut sheets for products supplied.
2. Test reports for horizontal cabling.
3. Test reports for backbone cabling.
4. Manufacturer's warranties.
5. "D-size" As-built drawings.

D. The As-built drawings shall accurately record location of service entrance conduit, termination backboards, outlet boxes, cable raceways, cable trays, pull boxes, and equipment racks electronically using AutoCAD's latest version and on a minimum "D" size reproducible paper print.

E. The LVLTC shall prepare 11" x 17" as-built serving zone drawings for each TR. The drawings shall be laminated, framed and secured to the wall in the MER and TR.

1.8 WARRANTIES:

A. The LVLTC shall furnish a manufacturer's warranty of products, applications and workmanship for 15 years from the date of acceptance by the Territory. Products and workmanship shall carry warranties equal to or greater than the warranty from the date of acceptance by the Territory.

B. Materials and workmanship shall be fully guaranteed by the LVLTC for 15 years from transfer of title against defects. The defects which may occur, as the result of faulty materials or workmanship within 15 years after installation and acceptance by the Agency shall be corrected by the LVLTC at no additional cost to the Agency.

C. The LVLTC shall promptly, at no cost to the Agency, correct or re-perform (including modifications or additions as necessary) nonconforming or defective work within 25 years after completion of the project.

D. The LVLTC shall procure equipment and materials that carry warranties against defects and workmanship whenever available. The LVLTC shall transfer to the Agency Owner additional warranties offered by the manufacturers, at no additional costs to the Agency.

E. The LVLTC's obligation under its warranty is limited to the cost of repair of the warranted item or replacement thereof, at the LVLTC's option. Insurance covering said equipment from damage or loss is to be borne by the LVLTC until full acceptance of equipment and services.

1.9 VIRGIN ISLANDS BUREAU OF TECHNOLOGY (BIT):

A. The US Virgin Islands is the owner of property and completed projects, unless otherwise specified in the project.

B. The BIT is responsible for telecommunications systems in Territory owned or leased buildings.

C. BIT is represented by regional BIT/Registered Communications Distribution Designers (BIT/RCDD) during the design and construction of facilities for the Territory. The RCDD will assist the design team and the other trade representatives throughout the design and construction process.

D. BIT reserves the right to send their RCDD as representative to attend construction meetings.

E. The BIT/RCDD shall help resolve issues concerning the telecommunications infrastructure during design and construction.

F. BIT reserves the right to send its BIT/RCDD as a representative to inspect the job site during construction to ensure compliance with the VITS and associated telecommunications codes and standards.

G. The BIT/RCDD shall be included in phases of the project from the first preliminary meeting to the final walk-through, including each architectural, engineering, and construction phase.

H. The BIT/RCDD shall provide input to the design and implementation of the telecommunications infrastructure.

I. The BIT/RCDD shall provide final approval of the details of the Specifications and Drawings for the voice, data, and video cabling recommendations at each phase and milestone of the project.

J. The BIT/RCDD shall serve as a single point of contact for coordinating and provisioning of telecommunications service entrances for each facility and for other associated tasks required for service and support provided through BIT.

1.10 REGULATORY CODES AND STANDARDS

A. Regulatory Agencies
Currently, the following agencies and their codes, standards and regulations shall govern all telecommunications work performed for the US Virgin Islands.

Acronym	Organization	Web Site
ANSI	American National Standards Institute	www.ansi.org
ASTM	American Society for Testing Materials	www.astm.org
BICSI	Building Industry Consulting Service International	www.bicsi.org
BOCA	Building Officials and Code Administrators International, Inc.	www.bocai.org
EIA	Electronic Industries Alliance	www.eia.org

EPA	Environmental Protection Agency	www.epa.gov
FCC	Federal Communications Commission	www.fcc.org
ICEA	Insulated Cable Engineers Association, Inc.	www.icea.net
IEEE	Institute of Electrical and Electronic Engineers, Inc	www.ieee.org
IEC	International Electro-technical Commission	www.iec.ch
ISO	International Organization for Standardization	www.iso.ch
NEMA	National Electrical Manufacturers Association	www.nema.org
NFPA	National Fire Protection Association	www.nfpa.org
NEC (NFPA 70)	National Electrical Code	www.nfpa.org
OSHA	Occupational Safety and Hazard Administration	www.osha.gov
SCTE	Society of Cable Telecommunications Engineers	www.scte.org
RUS	Rural Utilities Services	www.rurdev.usda.gov/rus/
TIA	Telecommunications Industry Association	www.tiaonline.org
UL	Underwriters Laboratories	www.ul.com

B. National Electrical Code, NFPA 70

12. The National Fire Protection Association has acted as the sponsor of the National Electrical Code (NEC) since 1911. The original Code was developed in 1897 as a result of the united efforts of various insurance, electrical, architectural, and allied interests. The purpose of the NEC is the practical safeguarding of persons and property from hazards arising from the use of electricity. The NEC provides the minimum code requirements for electrical safety. In telecommunications distribution design, the NEC must be used in concert with the ANSI/EIA/TIA standards, which are intended to insure the performance of the telecommunications infrastructure.

13. The National Electrical Code is available from**:** National Fire Protection Association, 1 Batterymarch Park, PO Box 9101, Quincy, MA 02269-9904

C. ANSI/TIA/EIA Standards

1. The Telecommunications Industry Association/Electronics Industry Association (ANSI/TIA/EIA) engineering standards and publications are designed to serve the public interest by eliminating misunderstandings between manufacturers and purchasers. The standards facilitate interchangeability and improvement of products and assist the purchaser in selecting and obtaining the proper product for his need.

2. ANSI/TIA/EIA Standards are updated every 5 years. Due to the rapid changes in the telecommunications and electronics industries, ANSI/TIA/EIA publishes periodic Telecommunications System Bulletins (TSB) which provides additional guidance on technical issues that must be addressed prior to the next scheduled revision of the Standards. The information contained in TSBs is usually incorporated into the applicable Standard during the next Standard revision.

D. ANSI/TIA/EIA Standards are available from: Global Engineering Documents, 15 Inverness Way East Englewood, CO 80112-5704, 1-800-624-3974

E. Optical Fiber Systems Test Procedures, ANSI/TIA/EIA-526 (series)
ANSI/TIA/EIA-526 contains a series of test procedures developed to provide uniform procedures for testing all or part of optical fiber systems or subsystems intended for optical communications or data transmission use. The base document is ANSI/TIA/EIA-526.

F. Cabling Standard, ANSI/TIA/EIA-568 (series)

1. The ANSI/TIA/EIA-568 (series) is the Commercial Building Telecommunications Cabling Standard. This standard defines a generic telecommunications cabling system for commercial buildings that will support a multi-product, multi-vendor environment. It also provides direction for the design of telecommunications products for commercial enterprise.

2. The purpose of the standard is to enable planning and installation of building cabling with little knowledge of the telecommunications products that subsequently will be installed. Installation of cabling systems during building construction or renovation is significantly less expensive and less disruptive than after the building is occupied. ANSI/TIA/EIA-568 establishes performance and technical criteria for various cabling system configurations for interfacing and connecting their respective elements.

G. Pathways and Spaces, ANSI/EIA/TIA-569 (series)

1. The ANSI/EIA/TIA-569 (series) is the Commercial Building Standard for Telecommunications Pathways and Spaces. This standard recognizes three fundamental concepts related to telecommunications and buildings

a. Buildings are dynamic.

i. Over the life of a building, or campus, remodeling is more the rule than the exception. The standard recognizes that changes will take place.

a. Building telecommunications systems and media are dynamic.

i. Over the life of a building, or campus, both telecommunications equipment and cabling requirements change dramatically. The standard recognizes this fact by being as independent as possible from specific vendor equipment and media.

b. Telecommunications is more than just voice and data connectivity.

3. Telecommunications also encompasses many other building systems including environmental controls, security, audio, television, sensing, alarms and paging.

4. Telecommunications includes all low voltage signal systems that convey information within or between buildings.

5. In order to have a building, or campus, successfully designed, constructed, and provisioned for telecommunications, it is imperative that the telecommunications design be incorporated during the preliminary architectural design phase. To accomplish this, the architect must work closely with the designated GVI/RCDD; and the Agency's Facilities Coordinator.

H. Administration Standard, ANSI/TIA/EIA-606 (series)
The ANSI/TIA/EIA-606 (series) is the Administration Standard for the Telecommunications Infrastructure of Commercial Buildings. Administration of the telecommunications infrastructure includes documentation of cables, termination hardware, patching and cross-connection facilities, conduits, other cable pathways, telecommunications rooms, and other telecommunications spaces. The purpose of this standard is to provide a uniform administration scheme that is independent of applications, which may change several times throughout the life of a building. This standard establishes guidelines for owners, end users, manufacturers, installers, and facilities administrators involved in the administration of the telecommunications infrastructure.

I. Grounding and Bonding, ANSI/J-STD-607 (series)
The ANSI/J-STD-607 (series) is the Commercial Building Grounding and Bonding Requirements for Telecommunications. The National Electrical Code (NEC) provides grounding, bonding, and electrical protection requirements to ensure life safety. Modern telecommunications systems require an effective grounding infrastructure to ensure optimum performance of the wide variety of electronic information transport systems that may be used throughout the life of a building. The grounding and bonding requirements of this standard are additional technical requirements for telecommunications that are beyond the scope of the NEC. These standards are intended to work in concert with the cabling topology specified in ANSI/TIA/EIA-568 and installed in the pathways and spaces designed in accordance with ANSI/TIA/EIA-569.

1.11 LOCAL AREA NETWORK ETHERNET STANDARD, IEEE 802.3 (SERIES)

The US Virgin Islands typically utilizes the Ethernet LAN protocol at all facilities. All US Virgin Islands telecommunications infrastructure must be designed to support the Institute of Electrical and Electronic Engineers (IEEE) Ethernet 802.3 standards. Most State organizations are in the process of migrating to the 1000Base-X Gigabit Ethernet protocol based on the IEEE 802.3z standard. All newly installed cabling shall support this protocol. Careful consideration must be given to the multimode optical fiber distance limitations and signal loss limitations (less than 2.5 dB end-to-end) necessary to support the IEEE 802.3z protocol.

1.12 BICSI TELECOMMUNICATIONS DISTRIBUTION METHODS MANUAL

BICSI is an ITS Association whose mission is to provide state-of-the-art telecommunications knowledge to the industry, resulting in good service to the end user. BICSI develops and publishes the Telecommunications Distribution Methods Manual (TDMM). The TDMM is not a code or standard. The TDMM is an extensive volume of information on the various aspects of telecommunications systems and telecommunications distribution. The TDMM provides discussions and examples of various engineering methods and design solutions that can be selected and employed in order to meet the requirements of the NEC and ANSI/TIA/EIA standards.

A. Additional BICSI Publications:

1. BICSI -- Cabling Installation Manual

2. BICSI -- LAN Design Manual

3. BICSI – Customer-Owned OSP Design Manual

1.13 BICSI PUBLICATIONS ARE AVAILABLE FROM:

BICSI, 8610 Hidden River Parkway, Tampa, FL 33637-1000 1-800-242-7405

PART 2 PRODUCTS (NOT APPLICABLE)

PART 3 EXECUTION (NOT APPLICABLE)

END OF SECTION

PART 1 - GENERAL

1.1 SUMMARY

A. Section Includes:

1. Communications equipment coordination and installation.
2. Sleeves for pathways and cables.
3. Sleeve seals.
4. Grout.
5. Common communications installation requirements.

1.2 DEFINITIONS

A. EPDM: Ethylene-propylene-diene terpolymer rubber.

B. NBR: Acrylonitrile-butadiene rubber.

1.3 SUBMITTALS

A. Product Data: For sleeve seals.

1.4 COORDINATION

A. Coordinate arrangement, mounting, and support of communications equipment:

1. To allow maximum possible headroom unless specific mounting heights that reduce headroom are indicated.
2. To provide for ease of disconnecting the equipment with minimum interference to other installations.
3. To allow right of way for pathways installed at required slope.
4. Ensure connecting pathways, cables, wireways, cable trays, and busways will be clear of obstructions and of the working and access space of other equipment.

A. Coordinate installation of required supporting devices in cast-in-place concrete, masonry walls, and other structural components as they are constructed.

B. Coordinate location of access panels and doors for communications items that are behind finished surfaces or otherwise concealed.

C. Coordinate selection and application of Firestopping specified in Division 07 Section "Through-Penetration Firestop Systems."

PART 2 - PRODUCTS

2.1 SLEEVES FOR PATHWAYS AND CABLES

A. Steel Pipe Sleeves: ASTM A 53/A 53M, Type E, Grade B, Schedule 40, galvanized steel, plain ends.

B. Cast-Iron Pipe Sleeves:
Cast or fabricated "wall pipe," equivalent to ductile-iron pressure pipe, with plain ends and integral waterstop, unless otherwise indicated.

C. Sleeves for Rectangular Openings: Galvanized sheet steel.

1. Minimum Metal Thickness:

a. For sleeve cross-section rectangle perimeter less than 50 inches (1270 mm) and no side more than 16 inches (400 mm), thickness shall be 0.052 inch (1.3 mm).

b. For sleeve cross-section rectangle perimeter equal to, or more than, 50 inches (1270 mm) and 1 or more sides equal to, or more than, 16 inches (400 mm), thickness shall be 0.138 inch (3.5 mm).

2.2 SLEEVE SEALS

A. Description:
Modular sealing device, designed for field assembly, to fill annular space between sleeve and pathway or cable.

1. Basis of Design Product:
Subject to compliance with requirements, provide or/a comparable product by one of the following:

a. Advance Products & Systems, Inc.

b. Calpico, Inc.

c. Metraflex Co.

d. Pipeline Seal and Insulator, Inc.

2. Sealing Elements:
EPDM interlocking links shaped to fit surface of cable or conduit. Include type and number required for material and size of pathway or cable.

3. Pressure Plates: Stainless steel. Include two for each sealing element.

4. Connecting Bolts and Nuts:
Stainless steel of length required to secure pressure plates to sealing elements. Include one for each sealing element.

2.3 GROUT

A. Nonmetallic, Shrinkage Resistant Grout:
ASTM C 1107, factory packaged, nonmetallic aggregate grout, noncorrosive, non-staining, mixed with water to consistency suitable for application and a 30-minute working time.

PART 3 - EXECUTION

3.1 COMMON REQUIREMENTS FOR COMMUNICATIONS INSTALLATION

A. Comply with NECA 1.

B. Measure indicated mounting heights to bottom of unit for suspended items and to center of unit for wall mounting items.

C. Headroom Maintenance: If mounting heights or other location criteria are not indicated, arrange and install components and equipment to provide maximum possible headroom consistent with these requirements.

D. Equipment:
Install to facilitate service, maintenance, and repair or replacement of components of both communications equipment and other nearby installations. Connect in such a way as to facilitate future disconnecting with minimum interference with other items in the vicinity.

E. Right of Way: Give to piping systems installed at a required slope.

3.2 SLEEVE INSTALLATION FOR COMMUNICATIONS PENETRATIONS

A. Communications penetrations occur when pathways, cables, wireways, or cable trays penetrate concrete slabs, concrete or masonry walls, or fire-rated floor and wall assemblies.

B. Concrete Slabs and Walls:

C. Install sleeves for penetrations unless core drilled holes or formed openings are used. Install sleeves during erection of slabs and walls.

D. Use pipe sleeves unless penetration arrangement requires rectangular sleeved opening.

E. Fire Rated Assemblies:

F. Install sleeves for penetrations of fire rated floor and wall assemblies unless openings compatible with fire stop system used are fabricated during construction of floor or wall.

G. Cut sleeves to length for mounting flush with both surfaces of walls.

H. Extend sleeves installed in floors 2 inches (50 mm) above finished floor level.

I. Size pipe sleeves to provide 1/4-inch (6.4-mm) annular clear space between sleeve and pathway or cable, unless indicated otherwise.

J. Seal space outside of sleeves with grout for penetrations of concrete and masomy

1. Promptly pack grout solidly between sleeve and wall so no voids remain. Tool exposed surfaces smooth; protect grout while curing.

K. Interior Penetrations of Non-Fire Rated Walls and Floors:
Seal annular space between sleeve and pathway or cable, using joint sealant appropriate for size, depth, and location of joint. Comply with requirements in Division 07 Section "Joint Sealants.".

L. Fire Rated Assembly Penetrations:
Maintain indicated fire rating of walls, partitions, ceilings, and floors at pathway and cable penetrations. Install sleeves and seal pathway and cable penetration sleeves with fire stop materials. Comply with requirements in Division 07 Section "Penetration Firestopping."

M. Roof-Penetration Sleeves:
Seal penetration of individual pathways and cables with flexible boot-type flashing units applied in coordination with roofing work.

N. Above ground, Exterior Wall Penetrations:
Seal penetrations using steel pipe sleeves and mechanical sleeve seals. Select sleeve size to allow for l-inch (25-mm) annular clear space between pipe and sleeve for installing mechanical sleeve seals.

O. Underground, Exterior Wall Penetrations:
Install cast iron pipe sleeves. Size sleeves to allow for l-inch (25-mm) annular clear space between pathway or cable and sleeve for installing mechanical sleeve seals.

3.3 SLEEVE-SEAL INSTALLATION

A. Install to seal exterior wall penetrations.

B. Use type and number of sealing elements recommended by manufacturer for pathway or cable material and size. Position pathway or cable in center of sleeve. Assemble mechanical sleeve seals and install in annular space between pathway or cable and sleeve. Tighten bolts against pressure plates that cause sealing elements to expand and make watertight seal.

3.4 FIRE STOPPING

A. Apply fire stopping to penetrations of fire rated floor and wall assemblies for communications installations to restore original fire resistance rating of assembly. Firestopping materials and installation requirements are specified in Division 07 Section "Penetration Fire Stopping."

END OF SECTION

PART 1 GENERAL

1.1 TELECOMMUNICATIONS SERVICE ENTRANCE FACILITIES

A. Access to the telecommunications grounding system specified by ANSI/TIA/EIA-607-A is mandatory.

B. Main Telecommunications Equipment Rooms

C. Access shall be made available to the telecommunications grounding system specified by ANSI/TIA/EIA – 607 - Commercial Building Grounding and Bonding Requirements for Telecommunications.

D. Telecommunications Rooms

E. Access shall be made available to the telecommunications grounding system specified by ANSI/TIA/EIA – 607 - Commercial Building Grounding and Bonding Requirements for Telecommunications.

1.2 GROUNDING AND BONDING

A. The National Electrical Code (NEC) provides grounding, bonding, and electrical protection requirements to ensure life safety. Modern telecommunications systems require an effective grounding infrastructure to ensure optimum performance of the wide variety of electronic information transport systems that may be used throughout the life of a building. The grounding and bonding requirements of ANSI/TIA/EIA-607 are intended to work in concert with the cabling topology specified in ANSI/TIA/EIA-568 and installed in pathways and spaces as specified in ANSI/TIA/EIA-569. The requirements of these standards, and of this manual, are in addition to the requirements of the NEC.

B. Conduits for Backbone and Horizontal Cabling Pathways shall be bonded to the grounding electrode system per the NEC.

C. All conduits shall be bonded to the grounding system as per NEC.

D. Telecommunications grounding, bonding, and electrical protection at Territory facilities shall comply with the requirement of the NEC, ANSI/TIA/EIA-607, and the additional requirements stated herein.

E. Telecommunications Main Grounding Busbar (TMGB)

1. The TMGB shall be installed at an accessible and convenient location in each Entrance Facility.

2. The TMGB shall be a pre-drilled copper busbar with standard NEMA bolt hole sizing and spacing. The busbar shall be ¼-inch thick x 4-inch wide, with length sized to accommodate ground connection of telecommunications racks, equipment, and shielded cables in the room, plus provision for 30% growth.

3. The TMGB shall be bonded to the building main electrical service-grounding electrode. No other grounding point for the TMGB shall be allowed. The TMGB shall not be bonded independently to water pipe, structural steel or electrical conduit.

F. Telecommunications Ground Busbar (TGB)

1. The Telecommunications Grounding Busbar (TGB) shall be a pre-drilled copper busbar with standard NEMA bolt hole sizing and spacing. The busbar shall be ¼-inch thick x 2-inch wide, with length sized to accommodate ground connection of all telecommunications racks, equipment, and shielded cables in the room, plus provision for 30% growth. The TGB shall be installed in each of the Telecommunications Rooms.

2. The TGB's shall be bonded together. Refer to the Telecommunications Riser Diagram.

G. Equipment Racks, Equipment Cabinets and Cable Ladder Racks

1. Equipment racks, equipment cabinets, cable ladder racks and exposed non-current carrying metal parts of the telecommunications Structured Cabling System shall bonded to the TMGB or TGB.

2. Each section of a cable ladder rack or tray, shall be bonded together by one of three ways:

   a. Remove paint down to bear metal at the point where the rack section interconnection hardware is mounted. Bond the rack assembly to the TMGB or TGB with a #6 AWG ground wire unless noted otherwise.

   b. Bond individual rack sections together using braided metal bonding straps or #6 AWG ground wires. The straps or ground wire shall be attached with bolts through holes drilled in the cable rack sections. The bolts must contact bear metal on the rack sections. Bond the rack assembly to the TMGB or TGB with a #6 AWG ground wire unless noted otherwise.

   c. Bond individual rack sections to a #6 AWG ground cable unless noted otherwise run throughout the entire length of rack. The ground cable shall be bonded to the TMGB or TGB.

H. Grounding and Bonding of Backbone Cables

   a. OSP copper backbone cables shall have the metallic cable shields bonded to the ground lug of the primary protector block at the entrance to each building.

   b. Optical fiber cables that contain metallic shielding or metallic strength members must have those metallic components bonded to the TMGB at each end of the cable.

   c. Inside plant copper or optical fiber backbone cables that contain metallic shielding shall have their shields bonded to the TMGB at each end.

d. The metallic shield of splices made to backbone cables shall be bonded together to maintain shield continuity.

PART 2 PRODUCTS

2.1 TELECOMMUNICATIONS SERVICE ENTRANCE FACILITIES

A. GROUNDING AND BONDING

1. Service Entrance TMGB

a. Provide a bond with a minimum of a # 6 AWG unless noted otherwise, green insulated ground wire from the TMGB to the main electrical service building ground.

b. Label grounding and bonding hardware and connections per ANSI/TIA/EIA 606-A.

c. The ground busbar assembly shall be copper, 1/4” x 4” x 23” with insulators and support bracket. Provide lugs for each Bonding Conductor (BC) and the Telecommunications Bonding Backbone (TBB). Hardware (bolts) shall be silicone bronze and lugs shall be copper alloy sized for connecting the BC and TBB to the TMGB and TGB.

d. Rack mounted equipment ground busbar shall be 3/16” x ¾” x 18 5/16” for attachment to 19” mounting rails of equipment racks and cabinets. Provide splice plates for attachment to multiple equipment racks and cabinets, #6-32 silicon bronze screws, ground lugs and mounting hardware.

2.2 MAIN TELECOMMUNICATIONS EQUIPMENT ROOMS

A. GROUNDING AND BONDING

1. The TGB shall be bonded to the Main Electrical service building ground by means of a # 6 AWG unless noted otherwise, green insulated ground wire.

2. Label grounding and bonding hardware and connections per ANSI/TIA/EIA 606A.

3. The ground busbar assembly shall be copper, 1/4” x 4” x 13.5” with insulators and support bracket. Provide lugs for each BC and the TBB. Hardware (bolts) shall be silicone bronze and lugs shall be copper alloy sized for connecting the BC and TBB to the TMGB and TGB.

4. Rack mounted equipment ground busbar shall be 3/16” x ¾” x 18 5/16” for attachment to 19” mounting rails of equipment racks and cabinets. Provide splice plates for attachment to multiple equipment racks and cabinets, #6-32 silicon bronze screws, ground lugs and mounting hardware.

2.3 ADMINISTRATION AND LABELING

A. The BC shall be provided with a self-adhesive, self-laminating, mechanically printed label with a clear protective laminating over wrap or mechanically printed heat shrink tubing. The label shall be approved by the BIT/RCDD prior to application.

B. The TGB and TMGB shall be provided with a copper, brass or 1/16" mechanically stamped tag, 3" square surface area minimum, legible and permanently affixed. The tag shall be approved by the BIT/RCDD prior to application.

2.4 GROUNDING

A. Comply with requirements in Division 16 Section 16450 for grounding conductors and connectors.

B. Telecommunications Main Bus Bar:

1. Connectors: Mechanical type, cast silicon bronze, solderless compression-type wire terminals, and long-barrel, two-bolt copper alloy lugs for connection to ground bus bar.

2. Ground Bus Bar: Copper, minimum 1/4 inch thick by 4 inches wide with 9/32-inch holes spaced 1-1/8 inches apart.

3. Stand-Off Insulators: Comply with UL 891 for use in switchboards, 600 V. Lexan or PVC, impulse tested at 5000 V.

C. Comply with ANSI-J-STD-607-A.

D. Label grounding and bonding hardware and connections per ANSI/TIA/EIA-606-A.

PART 3 EXECUTION

3.1 TELECOMMUNICATIONS SERVICE ENTRANCE FACILITIES

A. GROUNDING AND BONDING

1. The LVLTC shall install the grounding busbar as required by ANSI/TIA/EIA 607-A and the NEC.

2. Equipment racks, conduits, cable trays, ladder racks, etc. shall be bonded to the grounding busbar.

3. Bonding connectors and clamps shall be mechanical type made of silicon bronze.

4. Terminals shall be solderless compression type, copper long-barrel NEMA two bolts.

5. The LVLTC shall bond the shield of shielded cables to the grounding busbar per applicable code and manufacturers recommended practices.

6. Grounding and bonding shall be in accordance with ANSI/TIA/EIA-607-A and the NEC.

7. Labeling shall be in accordance with ANSI/TIA/EIA 606-A.

3.2 GROUNDING

A. Install grounding according to the BICSI TDMM, "Grounding, Bonding, and Electrical Protection" Chapter.

B. Comply with ANSI-J-STD-607-A.

C. Locate grounding bus bar to minimize the length of bonding conductors. Fasten to wall allowing at least 2-inch clearance behind the grounding bus bar. Connect grounding bus bar with a minimum No. 3/0 AWG grounding electrode conductor from grounding bus bar to suitable electrical building ground.

D. Bond metallic equipment to the grounding bus bar, using not smaller than No. 6 AWG equipment grounding conductor.

   1. Bond the shield of shielded cable to the grounding bus bar in communications rooms and spaces.

3.3 ADMINISTRATION AND LABELING

A. The LVLTC shall permanently secure the label within six (6) inches from both ends of the BC.

B. The LVLTC shall permanently secure the tag within six (6) inches from the TMGB and TGB.

END OF SECTION

PART 1 - GENERAL

1.1 RELATED DOCUMENTS

A. Drawings and general provisions of the Contract, including General and Supplementary Conditions and Division 01 Specification Sections, apply to this Section.

1.2 SUMMARY

A. Section Includes:

1. Metal conduits and fittings.
2. Nonmetallic conduits and fittings.
3. Optical-fiber-cable pathways and fittings.
4. Metal wire ways and auxiliary gutters.
5. Nonmetallic wire ways and auxiliary gutters.
6. Surface pathways.
7. Boxes, enclosures, and cabinets.
8. Hand holes and boxes for exterior underground cabling.

B. Related Requirements:

1. Section 260543 "Underground Ducts and Raceways for Electrical Systems" for exterior duct banks, manholes, and underground utility construction.
2. Section 260533 "Raceways and Boxes for Electrical Systems" for conduits, wire ways, surface raceways, boxes, enclosures, cabinets, hand holes, and faceplate adapters serving electrical systems.
3. Section 280528 "Pathways for Electronic Safety and Security" for conduits, surface pathways, inner duct, boxes, and faceplate adapters serving electronic safety and security.
4. Rooms used for telecommunications, including Service Entrance Facilities (SEF), the Main Equipment Rooms (MER), and Telecommunication Rooms (TR) shall be dedicated to the sole use of Telecommunications. No other building facility equipment shall be housed in rooms used for telecommunications including, but not limited to, fire alarm systems, monitoring systems, security systems, janitorial services, supply storage, departmental storage, etc.

1.3 DEFINITIONS

A. ARC: Aluminum rigid conduit

B. GRC: Galvanized rigid steel conduit

C. IMC: Intermediate metal conduit

1.4 ACTION SUBMITTALS

A. Product Data: For surface pathways, wireways and fittings, floor boxes, hinged-cover enclosures, and cabinets

B. LEED Submittals

1.5 INFORMATIONAL SUBMITTALS

A. Coordination Drawings:

B. Pathway routing plans, drawn to scale, on which the following items are shown and coordinated with each other, using input from installers of items involved:

1. Structural members in paths of pathway groups with common supports

2. HVAC and plumbing items and architectural features in paths of conduit groups with common supports

C. Qualification Data: For professional engineer.

D. Source quality-control reports.

1.6 MAIN TELECOMMUNICATIONS EQUIPMENT ROOMS

A. The Equipment Room shall be connected to the backbone pathway for cabling to the Telecommunications Entrance Facility and the Telecommunications Rooms.

1.7 BACKBONE PATHWAYS

A. The TRs shall have vertical 4" ID minimum conduit sleeved holes to the TR above provided by Division 26. Each TR shall have 4" sleeves provided by Division 26 between them. If the TRs are offset, multiple 4" conduits between them shall be provided by Division 26. An extra minimum 1-inch metallic sleeve shall be provided by Division 26 for the vertical riser ground system.

B. Sleeves provided by Division 26 will extend below the ceiling and above the floor 4" with a 2" clearance from the finished wall.

C. Firestop material shall be installed in sleeves.

PART 2 - PRODUCTS

2.1 METAL CONDUITS AND FITTINGS

A. Manufacturers:
Subject to compliance with requirements, available manufacturers offering products that may be incorporated into the Work include, but are not limited to, the following:

1. AFC Cable Systems, Inc.
2. Allied Tube & Conduit; a Tyco International Ltd. Co.
3. Alpha Wire Company
4. Anamet Electrical, Inc.
5. Electri-Flex Company
6. 0-ZJGedney; a brand of EGS Electrical Group
7. Republic Conduit
8. Southwire Company
9. Thomas & Betts Corporation
10. Western Tube and Conduit Corporation
11. Wheatland Tube Company; a division of John Maneely Company

B. General Requirements for Metal Conduits and Fittings:

1. Listed and labeled as defined in NFPA 70, by a qualified testing agency, and marked for intended location and application.
2. Comply with TIA-569-B.

C. GRC: Comply with ANSI C80.1 and UL 6.

D. ARC: Comply with ANSI C80.5 and UL 6A.

E. IMC: Comply with ANSI C80.6 and UL 1242.

F. PVC-Coated Steel Conduit: PVC-coated rigid steel conduit

1. Comply with NEMA RN 1.
2. Coating Thickness: 0.040 inch (l mm), minimum

G. EMT: Comply with ANSI C80.3 and UL 797.

H. Fittings for Metal Conduit: Comply with NEMA FB I and UL 514B.

1. Conduit Fittings for Hazardous (Classified) Locations: Comply with UL 886 and NFPA 70.
2. Fittings for EMT:

a. Material: Steel

b. Type: Setscrew or compression

3. Expansion Fittings:
PVC or steel to match conduit type, complying with UL-467, rated for environmental conditions where installed, and including flexible external bonding jumper.

4. Coating for Fittings for PVC-Coated Conduit:Minimum thickness of 0.040 inch (1 mm), width

I. Joint Compound for IMC, GRC, or ARC:
Approved, as defined in NFPA 70, by authorities having jurisdiction for use in conduit assemblies, and compounded for use to lubricate and protect threaded conduit joints from corrosion and to enhance their conductivity.

2.2 NONMETALLIC CONDUITS AND FITTINGS

A. Manufacturers:
Subject to compliance with requirements, available manufacturers offering products that may be incorporated into the Work include, but are not limited to, the following:

1. AFC Cable Systems, Inc.

2. Allied Tube & Conduit; a Tyco International Ltd. Co.

3. Anamet Electrical, Inc.

4. Arnco Corporation

5. CANTEX Inc.

6. CertainTeed Corp.

7. Condux International, Inc.

8. Electri-Flex Company

9. Kraloy

10. Lamson & Sessions; Carlon Electrical Products

11. Niedax-Kleinhuis USA, Inc.

12. RACO; a Hubbell company

13. Thomas & Betts Corporation

B. General Requirements for Nonmetallic Conduits and Fittings:

1. Listed and labeled as defined in NFPA 70, by a qualified testing agency, and marked for intended location and application.

2. Comply with TIA-569-B.

C. RNC: Type EPC-40-PVC, complying with NEMA TC 2 and UL 651 unless otherwise indicated.

D. Rigid HDPE: Comply with UL 651A.

E. RTRC: Comply with UL 1684A and NEMA TC 14.

F. Fittings for RNC: Comply with NEMA TC 3; match to conduit or tubing type and material.

G. Solvent cements and adhesive primers shall have a VOC content of 510 and 550 g/L or less, respectively, when calculated according to 40 CFR 59, Subpart D (EPA Method 24).

H. Solvent cements and adhesive primers shall comply with the testing and product requirements of the California Department of Health Services' "Standard Practice for the Testing of Volatile Organic Emissions from Various Sources Using Small Scale Environmental Chambers."

2.3 OPTICAL-FIBER-CABLE PATHWAYS AND FITTINGS

A. Manufacturers:
Subject to compliance with requirements, available manufacturers offering products that may be incorporated into the Work include, but are not limited to, the following:

1. Alpha Wire Company.

2. Arnco Corporation.

3. Endot Industries Inc.

4. IPEX.

B. Description:
Comply with UL 2024; flexible type pathway, approved for plenum installation unless otherwise indicated.

1. Listed and labeled as defined in NFPA 70, by a qualified testing agency, and marked for intended location and application.

2. Comply with TIA-569-B.

2.4 METAL WIREWAYS AND AUXILIARY GUTTERS

A. Manufacturers:
Subject to compliance with requirements, available manufacturers offering products that may be incorporated into the Work include, but are not limited to, the following:

1. Cooper B-Line, Inc.

2. Hoffman; a Pentair company

3. Mono-Systems, Inc.

4. Square D; a brand of Schneider Electric

B. Description:
Sheet metal, complying with UL 870 and NEMA 250, Type 1 unless otherwise indicated, and sized according to NFPA 70.

1. Metal wire ways installed outdoors shall be listed and labeled as defined in NFPA 70, by a qualified testing agency, and marked for intended location and application.

2. Comply with TIA-569-B.

C. Fittings and Accessories:
Include covers, couplings, offsets, elbows, expansion joints, adapters, hold down straps, end caps, and other fittings to match and mate with wire ways as required for complete system.

D. Wire way Covers: Hinged type unless otherwise indicated

E. Finish: Manufacturer's standard enamel finish.

2.5 NONMETALLIC WIREWAYS AND AUXILIARY GUTTERS

A. Manufacturers:
Subject to compliance with requirements, available manufacturers offering products that may be incorporated into the Work include, but are not limited to, the following:

1. Allied Moulded Products, Inc.

2. Hoffman; a Pentair company

3. Lamson & Sessions; Carlon Electrical Products

4. Niedax-Kieinhuis USA, Inc.

B. General Requirements for Nonmetallic Wireways and Auxiliary Gutters:

1. Listed and labeled as defined in NFPA 70, by a qualified testing agency, and marked for intended location and application.

2. Comply with TIA-569-B.

C. Description:
Fiberglass polyester extruded and fabricated to required size and shape, without holes or knockouts. Cover shall be gasketed with oil resistant gasket material and fastened with captive screws treated for corrosion resistance. Connections shall be flanged and have stainless steel screws and oil-resistant gaskets.

D. Description:
PVC, extruded and fabricated to required size and shape, and having snap-on cover, mechanically coupled connections, and plastic fasteners.

E. Fittings and Accessories:

Couplings, offsets, elbows, expansion joints, adapters, hold-down straps, end caps, and other fittings shall match and mate with wireways as required for complete system.

F. Solvent cements and adhesive primers shall have a VOC content of 510 and 550 g/L or less, respectively, when calculated according to 40 CFR 59, Subpart D (EPA Method 24).

G. Solvent cements and adhesive primers shall comply with the testing and product requirements of the California Department of Health Services' "Standard Practice for the Testing of Volatile Organic Emissions from Various Sources Using Small Scale Environmental Chambers."

2.6 SURFACE PATHWAYS

A. General Requirements for Surface Pathways:

1. Listed and labeled as defined in NFPA 70, by a qualified testing agency, and marked for intended location and application.

2. Comply with TIA-569-B.

B. Surface Metal Pathways:
Galvanized steel with snap-on covers complying with UL 5. Prime coated, ready for field painting.

1. Manufacturers:
Subject to compliance with requirements, available manufacturers offering products that may be incorporated into the Work include, but are not limited to, the following:

a. Mono-Systems, Inc.

b. Niedax-Kleinhuis USA, Inc.

c. Panduit Corp

d. Wiremold *I* Legrand

C. Surface Nonmetallic Pathways:
Two- or three-piece construction, complying with UL 5A, and manufactured of rigid PVC with texture and color selected by Owner’s Representative from manufacturer's standard colors. Product shall comply with UL-94 V-0 requirements for self-extinguishing characteristics.

1. Manufacturers:
Subject to compliance with requirements, available manufacturers offering products that may be incorporated into the Work include, but are not limited to, the following:

a. Hubbell Incorporated; Wiring Device-Kellems Division

b. Lamson & Sessions; Carlon Electrical Products

c. Mono-Systems, Inc.

d. Panduit Corp.

e. Wiremold / Legrand

2.7 BOXES, ENCLOSURES, AND CABINETS

A. Manufacturers:
Subject to compliance with requirements, available manufacturers offering products that may be incorporated into the Work include, but are not limited to, the following:

1. Adalet
2. Cooper Technologies Company; Cooper Crouse-Hinds
3. EGSI Appleton Electric
4. Erickson Electrical Equipment Company
5. Hoffman; a Pentair company
6. Hubbell Incorporated; Killark Division
7. Lamson & Sessions; Carlon Electrical Products
8. Milbank Manufacturing Co.
9. Molex; Woodhead Brand
10. Mono-Systems, Inc.
11. 0-ZJGedney; a brand of EGS Electrical Group
12. RACO; a Hubbell company
13. Robroy Industries
14. Spring City Electrical Manufacturing Company
15. Stahlin Non-Metallic Enclosures; a division of Robroy Industries
16. Thomas & Betts Corporation
17. Wiremold / Legrand

B. General Requirements for Boxes, Enclosures, and Cabinets:

1. Comply with TIA-569-B.
2. Boxes, enclosures and cabinets installed in wet locations shall be listed for use in wet locations.

C. Sheet Metal Outlet and Device Boxes: Comply with NEMA OS 1 and UL 514A.

D. Cast Metal Outlet and Device Boxes: Comply with NEMA FB 1, aluminum, Type FD, with gasketed cover.

E. Box extensions used to accommodate new building finishes shall be of same material as recessed box.

F. Metal Floor Boxes:

1. Material: Cast metal

5. Type: Fully adjustable

6. Shape: Rectangular

7. Listing and Labeling:
Metal floor boxes shall be listed and labeled as defined in NFPA 70, by a qualified testing agency, and marked for intended location and application.

G. Nonmetallic Floor Boxes: Nonadjustable, rectangular

1. Listing and Labeling:
Nonmetallic floor boxes shall be listed and labeled as defined in NFPA 70, by a qualified testing agency, and marked for intended location and application.

H. Small Sheet Metal Pull and Junction Boxes: NEMA OS 1

I. Cast-Metal Access, Pull, and Junction Boxes:
Comply with NEMA FB 1 and UL 1773, cast aluminum with gasketed cover.

J. Device Box Dimensions: 4 inches square by 2-1/8 inches deep (100 mm square by 60 mm deep)

K. Gangable boxes are prohibited.

L. Nonmetallic Outlet and Device Boxes: Comply with NEMA OS 2 and UL 514C.

M. Hinged Cover Enclosures:
Comply with UL 50 and NEMA 250, Type 1 with continuous hinge cover with flush latch unless otherwise indicated.

1. Metal Enclosures: Steel, finished inside and out with manufacturer's standard enamel

2. Nonmetallic Enclosures:

a. Material: Fiberglass

b. Finished inside with radio-frequency-resistant paint.

8. Interior Panels: Steel; all sides finished with manufacturer's standard enamel.

N. Cabinets:

1. NEMA 250, Type 1, galvanized-steel box with removable interior panel and removable front, finished inside and out with manufacturer's standard enamel.

2. Hinged door in front cover with flush latch and concealed hinge

3. Key latch to match panelboards.

4. Metal barriers to separate wiring of different systems and voltage.

5. Accessory feet where required for freestanding equipment

6. Nonmetallic cabinets shall be listed and labeled as defined in NFPA 70, by a qualified testing agency, and marked for intended location and application.

2.8 LADDER RACK

A. Provide ladder rack and stand-offs for support of backbone cables passing vertically through TRs.

B. Include connecting hardware and support hardware for a complete installation including, but not limited to, equipment rack to runway mounting plates, wall angle support brackets, butt splice swivels, junction splice connections and grounding kits.

C. Ladder Rack:

1. Manufacturers: Subject to compliance with requirements, available manufacturers offering products that may be incorporated into the Work include, but are not limited to, the following:

   a. Cooper B-Line, Inc.

   b. Ortronics, Inc.

   c. Siemon Co.

   d. Panduit Corp.

   e. Hubbell

   f. CommScope, Inc

   g. Leviton

2. Ladder Rack Materials: Types 304 and 316 stainless steel. Ladder rack shall be a tubular side bar type nominally 3/8" thick by 1-1/2" high (Minimum) with 1/2" x 1" welded rings spaced 9" on center.

   a. Ladder Racks: Nominally 18 inches wide, and a rung spacing of 9 inches.

2.9 STRUCTURED CABLING (HORIZONTAL) SUPPORTS

A. Metallic J-hooks may be used for this project.

B. Cable Support: NRTL labeled. Cable support brackets shall be designed to prevent degradation of cable performance and pinch points that could damage cable. Cable ties are not allowed.

1. Comply with NFPA 70 and UL 2043 for fire-resistant and low-smoke-producing characteristics.

2. Adjustable cable supports, plenum rated.

PART 3 - EXECUTION

3.1 PATHWAY APPLICATION

A. Indoors: Apply pathway products as specified below unless otherwise indicated:

1. Exposed, Not Subject to Physical Damage: EMT

2. Exposed, Not Subject to Severe Physical Damage: EMT

3. Exposed and Subject to Severe Physical Damage: GRC. Pathway locations include the following:

   a. Mechanical rooms

4. Concealed in Ceilings and Interior Walls and Partitions: EMT

5. Damp or Wet Locations: GRC

6. Pathways for Optical Fiber or Communications Cable in Spaces Used for Environmental Air: EMT

7. Pathways for Optical-Fiber or Communications-Cable Risers in Vertical Shafts: EMT

8. Pathways for Concealed General-Purpose Distribution of Optical-Fiber or Communications Cable: EMT

9. Boxes and Enclosures:
NEMA 250 Type I.

B. Minimum Pathway Size: l-inch (27-mm) trade size. Minimum size for optical fiber cables is 1 inch (27 mm).

C. Pathway Fittings: Compatible with pathways and suitable for use and location

1. Rigid and Intermediate Steel Conduit:
Use threaded rigid steel conduit fittings unless otherwise indicated. Comply with NEMA FB 2.10.

2. PVC Externally Coated, Rigid Steel Conduits:

Use only fittings listed for use with this type of conduit. Patch and seal all joints, nicks, and scrapes in PVC coating after installing conduits and fittings. Use sealant recommended by fitting manufacturer and apply in thickness and number of coats recommended by manufacturer.

3. EMT: Use setscrew or compression, steel fittings. Comply with NEMA FB 2.10.

D. Do not install aluminum conduits, boxes, or fittings in contact with concrete or earth.

E. Install surface pathways only where indicated on Drawings.

F. Do not install nonmetallic-conduit where ambient temperature exceeds 120°F (49°C).

3.2 INSTALLATION

A. Comply with NECA 1, NECA 101, and TIA-569-B for installation requirements except where requirements on Drawings or in this article are stricter. Comply with NECA 102 for aluminum pathways. Comply with NFPA 70 limitations for types of pathways allowed in specific occupancies and number of floors.

B. Keep pathways at least 6 inches (150 mm) away from parallel runs of flues and steam or hot-water pipes. Install horizontal pathway runs above water and steam piping.

C. Complete pathway installation before starting conductor installation.

D. Comply with requirements in Section 260529 "Hangers and Supports for Electrical Systems" for hangers and supports.

E. Arrange stub-ups so curved portions of bends are not visible above finished slab.

F. Install no more than the equivalent of two 90-degree bends in any pathway run. Support within 12 inches (300 mm) of changes in direction. Utilize long radius ells for all optical fiber cables.

G. Conceal conduit and EMT within finished walls and ceilings unless otherwise indicated. Install conduits parallel or perpendicular to building lines.

H. Support conduit within 12 inches (300 mm) of enclosures to which attached.

I. Stub-ups to Above Recessed Ceilings:

1. Use EMT, IMC, or RMC for pathways.

2. Use a conduit bushing or insulated fitting to terminate stub-ups not terminated in hubs or in an enclosure.

J. Coat field cut threads on PVC coated pathway with a corrosion preventing conductive compound prior to assembly.

K. Terminate threaded conduits into threaded hubs or with locknuts on inside and outside of boxes or cabinets. Install insulated bushings on conduits terminated with locknuts.

L. Install pathways square to the enclosure and terminate at enclosures with locknuts. Install locknuts hand tight plus 1/4 turn more.

M. Do not rely on locknuts to penetrate nonconductive coatings on enclosures. Remove coatings in the locknut area prior to assembling conduit to enclosure to assure a continuous ground path.

N. Cut conduit perpendicular to the length. For conduits of 2-inch (53-mm) trade size and larger, use roll cutter or a guide to ensure cut is straight and perpendicular to the length.

O. Install pull wires in empty pathways. Use polypropylene or monofilament plastic line with not less than 200-lb (90-kg) tensile strength. Leave at least 12 inches (300 mm) of slack at each end of pull wire. Cap underground pathways designated as spare above grade alongside pathways in use.

P. Surface Pathways:

1. Install surface pathway for surface telecommunications outlet boxes only where shown on Drawings.

2. Install surface pathway with a minimum 2-inch (50-mm) radius control at bend points.

3. Secure surface pathway with screws or other anchor-type devices at intervals not exceeding 48 inches (1200 mm) and with no less than two supports per straight pathway section. Support surface pathway according to manufacturer's written instructions. Tape and glue are not acceptable support methods.

Q. Pathways for Optical Fiber and Communications Cable: Install pathways, metal and nonmetallic, rigid and flexible, as follows:

1. 3/4-Inch (21-mm) Trade Size and Smaller: Install pathways in maximum lengths of 50 feet (15m).

4. l-Inch (27-mm) Trade Size and Larger: Install pathways in maximum lengths of 75 feet (23m).

5. Install with a maximum of two 90-degree bends or equivalent for each length of pathway unless Drawings show stricter requirements. Separate lengths with pull or junction boxes or terminations at distribution frames or cabinets where necessary to comply with these requirements.

R. Install pathway sealing fittings at accessible locations according to NFPA 70 and fill them with listed sealing compound. For concealed pathways, install each fitting in a flush steel box with a blank cover plate having a finish like that of adjacent plates or surfaces. Install pathway sealing fittings according to NFPA 70.

S. Install devices to seal pathway interiors at accessible locations. Locate seals so no fittings or boxes are between the seal and the following changes of environments. Seal the interior of all pathways at the following points:

1. Where conduits pass from warm to cold locations, such as boundaries of refrigerated spaces.

2. Where an underground service pathway enters a building or structure.

3. Where otherwise required by NFPA 70.

T. Comply with manufacturer's written instructions for solvent welding PVC conduit and fittings.

U. Mount boxes at heights shown on Drawings. If mounting heights of boxes are not individually indicated, give priority to ADA requirements. Install boxes with height measured to top of box unless otherwise indicated.

V. Recessed Boxes in Masonry Walls:
Saw-cut opening for box in center of cell of masonry block and install box flush with surface of wall. Prepare block surface to provide a flat surface for a raintight connection between box and cover plate or supported equipment and box.

W. Horizontally separate boxes mounted on opposite sides of walls, so they are not in the same vertical channel.

X. Support boxes of three gangs or more from more than one side by spanning two framing members or mounting on brackets specifically designed for the purpose.

Y. Fasten junction and pull boxes to or support from building structure. Do not support boxes by conduits.

Z. Set metal floor boxes level and flush with finished floor surface.

AA. Set nonmetallic floor boxes level. Trim after installation to fit flush with finished floor surface.

3.3 SLEEVE AND SLEEVE-SEAL INSTALLATION FOR COMMUNICATIONS PENETRATIONS

A. Install sleeves and sleeve seals at penetrations of exterior floor and wall assemblies. Comply with requirements in Section 270544 "Sleeves and Sleeve Seals for Communications Pathways and Cabling."

3.4 PROTECTION

A. Protect coatings, finishes, and cabinets from damage or deterioration.

1. Repair damage to galvanized finishes with zinc-rich paint recommended by manufacturer.

2. Repair damage to PVC coatings or paint finishes with matching touchup coating recommended by manufacturer.

3.5 LADDER RACK

A. Install at 84" AFF per manufacturer's recommendations and secured to the top of equipment racks.

B. The ladder rack shall be supported at three-foot intervals with triangular support brackets from the walls and securely attached to the equipment.

C. Cable radius waterfalls shall be attached to the ladder rack to maintain cable bending radius where cables enter and exit the ladder rack.

D. Cable shall be secured to the ladder rack using reusable Velcro type cable ties to arrange cables in logical bundles.

E. Telecommunications grounding and bonding shall be in accordance with applicable codes and regulations. Comply with ANSI/TIA/EIA-607-A and the NEC.

F. Comply with requirements for demarcation point, pathways, cabinets, and racks specified in Division 27 Section "Communications Equipment Room Fittings." Drawings indicate general arrangement of pathways and fittings.

G. Ladder racks shall comply with NEMA VE2 and ANSI/TIA/EIA 569-B.

3.6 VERTICAL LADDER RACKS

A. Vertical ladder rack shall be installed by the LVLTC.

B. The vertical ladder rack shall be installed on the wall above/below sleeves from the floor to the ceiling above. Stand offs shall be installed as necessary to support the required ladder rack. The anchoring system provided shall be suitable for the type of wall and the weight to be supported by the ladder rack.

3.7 STRUCTURED CABLING (HORIZONTAL) SUPPORTS

A. Metallic J-hooks may be used for this project.

B. Provide adjustable cable supports for the structured cabling on 30-inch centers maximum.

C. Provide Velcro type tie wraps for the structured cabling.

D. The adjustable cable supports shall be rated to carry Category 6 cabling and sized not to exceed the manufacturer's recommended quantity of cables.

END OF SECTION

PART 1 - GENERAL

1.1 RELATED DOCUMENTS

A. Drawings and general provisions of the Contract, including General and Supplementary Conditions and Division 01 Specification Sections, apply to this Section.

1.2 SUMMARY

A. Section Includes:

1. Telecommunications mounting elements
2. Backboards
3. Grounding

B. Related Sections:

1. Division 27 Section "Communications Backbone Cabling" for Structural Cabling associated with system panels and devices.
2. Division 27 Section "Communications Horizontal Cabling" for Structural Cabling associated with system panels and devices.

1.3 DEFINITIONS

A. A BICSI: Building Industry Consulting Service International

B. LAN: Local area network

C. RCDD: Registered Communications Distribution Designer

D. Ladder Rack: A fabricated structure consisting of two longitudinal side rails connected by individual transverse members (rungs).

1.4 ACTION SUBMITTALS

A. Product Data: For each type of product.

1. Include construction details, material descriptions, dimensions of individual components and profiles, and finishes for equipment racks and cabinets.
2. Include rated capacities, operating characteristics, electrical characteristics, and furnished specialties and accessories.

B. Shop Drawings:
For communications equipment room fittings. Include plans, elevations, sections, details, and attachments to other work.

1. Detail equipment assemblies and indicate dimensions, weights, loads, required clearances, method of field assembly, components, and location and size of each field connection.

2. Equipment Racks and Cabinets: Include workspace requirements and access for cable connections.

3. Grounding: Indicate location of grounding bus bar and its mounting detail showing standoff insulators and wall mounting brackets.

1.5 QUALITY ASSURANCE

A. Installer Qualifications: Cabling Installer must have personnel certified by BICSI on staff.

1. Layout Responsibility: Preparation of Shop Drawings shall be under the direct supervision of RCDD.

2. Installation Supervision:
Installation shall be under the direct supervision of Registered Technician, who shall always be present when Work of this Section is performed at Project site.

3. Field Inspector: Currently registered by BICSI as RCDD to perform the on-site inspection.

C. Electrical Components, Devices, and Accessories: Listed and labeled as defined in NFPA 70, by a qualified testing agency, and marked for intended location and application.

D. Telecommunications Pathways and Spaces: Comply with ANSI/TIA/EIA-569-B.

E. Grounding: Comply with ANSI-J-STD-607-A.

1.6 PROJECT CONDITIONS

A. Environmental Limitations: Do not deliver or install equipment frames and ladder racks until spaces are enclosed and weather-tight, wet work in spaces is complete and dry, and work above ceilings is complete. Floor tile shall be in place prior to mounting systems to the floor.

1.7 COORDINATION

A. Coordinate layout and installation of communications equipment with Owner's telecommunications and LAN equipment and service suppliers. Coordinate service entrance arrangement with BIT.

1. Meet jointly with BIT/RCDD, Telco representatives, and Owner to exchange information and agree on details of equipment arrangements and installation interfaces.

2. Record agreements reached in meetings and distribute them to other participants.

B. Coordinate location of power raceways and receptacles with locations of communications equipment requiring electrical power to operate.

PART 2 - PRODUCTS

2.1 BACKBOARDS

A. Backboards:
Plywood, fire-retardant treated, 3/4 by 48 by 96 inches (19 by 1220 by 2440 mm). Comply with requirements for plywood backing panels specified in Section 061000 "Rough Carpentry."

2.2 EQUIPMENT FRAMES

A. Manufacturers:
Subject to compliance with requirements, available manufacturers offering products that may be incorporated into the Work include, but are not limited to, the following:

1. ADC

2. Belden Inc.

3. Cooper B-Line

4. Emerson Network Power Connectivity Solutions

5. Hubbell Premise Wiring

6. Leviton Commercial Networks Division

7. Middle Atlantic Products, Inc.

8. Ortronics, Inc.

9. Panduit Corp.

10. Siemon Co. (The).

11. Tyco Electronics Corporation; AMP Products.

B. General Frame Requirements:

1. Distribution Frames:
Freestanding and wall-mounting, modular-steel units designed for telecommunications terminal support and coordinated with dimensions of units to be supported.

4. Module Dimension:
Width compatible with EIA 31 0-D standard, 19-inch (480-mm) panel mounting.

5. Finish: Manufacturer’s standard, baked-polyester powder coat.

C. Floor-Mounted Racks:

1. Vertical and horizontal cable management channels, top and bottom cable troughs, grounding lug.

2. Baked-polyester powder coat black finish.

D. Modular Freestanding Cabinets:

1. Removable and lockable side panels.

2. Hinged and lockable front and rear doors.

3. Adjustable feet for leveling.

4. Screened ventilation openings in the front and rear doors.

5. Cable access provisions in the roof and base.

6. Grounding bus bar.

7. Roof or door mounted, 550-cfm fan with filter.

8. Power strip.

9. Baked-polyester powder coat black finish.

10. Cabinets keyed alike.

E. Cable Management for Equipment Frames:

1. Metal, with integral wire retaining fingers

2. Baked polyester powder coat finish

3. Vertical cable management panels shall have front and rear channels, with covers

4. Provide horizontal crossover cable manager at the top of each relay rack, with a minimum height of two rack units each.

5. Horizontal cable managers shall have extended covers to hide patch cables lacing into vertical cable managers.

2.3 GROUNDING

A. Comply with requirements in Section 260526 "Grounding and Bonding for Electrical Systems" for grounding conductors and connectors.

B. Telecommunications Main Bus Bar:

1. Connectors:
Mechanical type cast silicon bronze, solderless compression-type wire terminals, and long barrel, two bolt connection to ground bus bar.

6. Ground Bus Bar:
Copper, minimum 1/4-inch-thick by 4 inches wide (6 mm thick by 100 mm wide) with 9/32-inch (7.14-mm) holes spaced 1-1/8 inches (28 mm) apart.

7. Stand-Off Insulators:
Comply with UL 891 for use in switchboards, 600 V. Lexan or PVC, impulse tested at 5000 V.

C. Comply with J-STD-607-A.

2.4 LABELING

A. Comply with TINEIA-606-A and UL 969 for a system of labeling materials, including label stocks, laminating adhesives, and inks used by label printers.

PART 3 - EXECUTION

3.1 ENTRANCE FACILITIES

A. Contact telecommunications service provider and BIT to arrange for installation of demarcation point, protected entrance terminals, and a housing when so directed by service provider.

B. Comply with requirements in Section 270528 "Pathways for Communications Systems" for materials and installation requirements for underground pathways.

3.2 INSTALLATION

A. Comply with NECA l.

B. Comply with BICSI TDMM for layout and installation of communications equipment rooms.

C. Bundle, lace, and train conductors and cables to terminal points without exceeding manufacturer's limitations on bending radii. Install lacing bars and distribution spools.

D. Coordinate layout and installation of communications equipment with Owner's telecommunications and LAN equipment and service suppliers. Coordinate service entrance arrangement with local exchange carrier.

1. Meet jointly with telecommunications and LAN equipment suppliers, local exchange carrier representatives, and Owner to exchange information and agree on details of equipment arrangements and installation interfaces.

2. Record agreements reached in meetings and distribute them to other participants.

3. Adjust arrangements and locations of distribution frames, cross-connects, and patch panels in equipment rooms to accommodate and optimize arrangement and space requirements of telephone switch and LAN equipment.

4. Adjust arrangements and locations of equipment with distribution frames, cross-connects, and patch panels of cabling systems of other communications, electronic safety and security, and related systems that share space in the equipment room.

E. Coordinate location of power raceways and receptacles with locations of communications equipment requiring electrical power to operate.

3.3 SLEEVE AND SLEEVE SEAL INSTALLATION FOR ELECTRICAL PENETRATIONS

A. Install sleeves and sleeve seals at penetrations of exterior floor and wall assemblies. Follow requirements in Section 270544 "Sleeves and Sleeve Seals for Communications Pathways and Cabling."

3.4 FIRE STOPPING

A. Comply with requirements in Section 078413 "Penetration Fire Stopping."

B. Comply with TIA-569-B, Annex A, "Fire stopping."

C. Comply with BICSI TDMM, "Fire stopping Systems" Article.

3.5 GROUNDING

A. Install grounding according to BICSI TDMM, "Grounding, Bonding, and Electrical Protection" Chapter.

B. Comply with J-STD-607-A

C. Locate grounding bus bar to minimize the length of bonding conductors. Fasten to wall allowing at least 2-inch (50-mm) clearance behind the grounding bus bar. Connect grounding bus bar with a minimum No. 4 AWG grounding electrode conductor from grounding bus bar to suitable electrical building ground.

D. Bond metallic equipment to the grounding bus bar, using not smaller than No. 6 AWG equipment grounding conductor.

1. Bond the shield of shielded cable to the grounding bus bar in communications rooms and spaces.

3.6 IDENTIFICATION

A. Identify system components, cabling, and cabling complying with ANSI/TIA/EIA-606-A. Comply with requirements in Division 26 Section 26010. Comply with requirements in Division 09 Section 09900 Painting for painting backboards. For fire-resistant plywood, do not paint over manufacturer's label. For paint additive coats on AC grade plywood, provide label on backboard.

B. See Division 27 Section "Communications Horizontal Cabling" for additional identification requirements. See Evaluations for discussion of TIA/EIA standard as it applies to this Section. Paint and label colors for equipment identification shall comply with ANSI/TIA/EIA-606-A.

C. Labels shall be preprinted or computer-printed type.

END OF SECTION

PART 1 GENERAL

1.1 RELATED DOCUMENTS

A. General provisions of the Contract, including General and Supplementary Conditions and Division 01 Specification Sections, apply to this Section.

1.2 SUMMARY

A. Section Includes:

1. Pathways.
2. UTP cable.
3. 50/125-micrometer, multimode optical fiber cabling.
4. Cable connecting hardware, patch panels, and cross-connects.
5. Cabling identification products.
6. 8.3/125-micrometer, single mode optical fiber cabling.

1.3 DEFINITIONS

A. BICSI: Building Industry Consulting Service International.

B. Cross-Connect: A facility enabling the termination of cable elements and their interconnection or cross-connection.

C. EMI: Electromagnetic interference.

D. IDC: Insulation displacement connector.

E. LAN: Local area network.

F. RCDD: Registered Communications Distribution Designer.

G. UTP: Unshielded twisted pair.

1.4 BACKBONE CABLING DESCRIPTION

A. Backbone cabling system shall provide interconnections between Telecommunications rooms in the telecommunications cabling system structures. Cabling system consists of backbone cables, intermediate and main cross-connects mechanical terminations, and patch cables or jumpers used for backbone-to-backbone cross-connection.

B. Backbone cabling cross-connects shall be located in Telecommunications rooms. Bridged taps and splitters shall not be used as part of backbone cabling.

1.5 PERFORMANCE REQUIREMENTS

A. General Performance: Backbone cabling system shall comply with transmission standards in ANSI/TIA/EIA-568-B.1, when tested according to test procedures of this standard.

1.6 SUBMITTALS

A. Product Data: For each type of product indicated.

B. Shop Drawings:

1. System Labeling Schedules: Electronic copy of labeling schedules, in software and format selected by Owner.

2. Cabling administration drawings and printouts.

3. Cabling diagrams to show typical cabling schematics including the following:

a. Cross-connects.

b. Patch panels.

c. Patch cables.

4. Cross-connects and patch panels. Detail mounting assemblies and show elevations and physical relationship between the installed components.

5. Ladder rack layout, showing ladder rack route to scale, with relationship between the rack and adjacent structural, electrical, and mechanical elements. Include the following:

a. Vertical and horizontal offsets and transitions.

b. Clearances for access above and to side of ladder racks.

c. Vertical elevation of ladder racks above the floor or bottom of ceiling structure.

d. Load calculations to show dead and live loads as not exceeding manufacturer's rating for rack and its support elements.

C. Qualification Data: For Installer, qualified layout technician, installation supervisor, and field inspector.

D. Source quality-control reports.

E. Field quality-control reports.

F. Maintenance Data: For splices and connectors to include in maintenance manuals.

G. Software and Firmware Operational Documentation:

1. Software operating and upgrade manuals.

2. Program Software Backup: On magnetic media or compact disk, complete with data files.

3. Device address list.

4. Printout of software application and graphic screens.

1.7 QUALITY ASSURANCE

A. Testing Agency Qualifications: An NRTL.

1. Testing Agency's Field Supervisor: Currently certified by BICSI as an RCDD to supervise on-site testing.

B. Surface-Burning Characteristics: As determined by testing identical products according to ASTM E-84 by a qualified testing agency. Identify products with appropriate markings of applicable testing agency.

1. Flame-Spread Index: 25 or less.

2. Smoke-Developed Index: 50 or less.

C. Electrical Components, Devices, and Accessories: Listed and labeled as defined in NFPA 70, by a qualified testing agency, and marked for intended location and application.

1.8 DELIVERY, STORAGE, AND HANDLING

A. Test cables upon receipt at Project site.

1. Test optical fiber cable to determine the continuity of the strand end to end. Use optical loss test set.

2. Retain test data and include the record in maintenance data.

3. Test each pair of UTP cable for open and short circuits.

1.9 PROJECT CONDITIONS

A. Environmental Limitations: Do not deliver or install cables and connecting materials until wet work in spaces is complete and dry, and temporary HVAC system is operating and maintaining ambient temperature and humidity conditions at occupancy levels during the remainder of the construction period. Floor tile shall be in place prior to mounting systems to the floor.

1.10 COORDINATION

A. Coordinate layout and installation of telecommunications pathways and cabling with Owner's Representatives and BIT/RCDD.

1.11 SOFTWARE SERVICE AGREEMENT

A. Technical Support: Beginning with Substantial Completion, provide software support for two years.

B. Upgrade Service: Update software to latest version at Project completion. Install and program software upgrades that become available within two years from date of Substantial Completion. Upgrading software shall include operating system. Upgrade shall include new or revised licenses for use of software.

1. Provide 30 days' notice to Owner to allow scheduling and access to system and to allow Owner to upgrade computer equipment if necessary.

1.12 EXTRA MATERIALS

A. Furnish extra materials that match products installed and that are packaged with protective covering for storage and identified with labels describing contents.

1. Patch-Panel Units: 10% of each type.

2. Connectors and covers: 10% of each type.

PART 2 PRODUCTS

2.1 EQUIPMENT FRAMES

A. Manufacturers: Subject to compliance with requirements, provide products by one of the following:

1. Cooper B-Line, Inc.

2. Leviton

3. Chatsworth (CPI)

4. CommScope, Inc

5. Siemon Co.

6. Panduit Corp.

7. Hubbell

B. General Frame Requirements:

1. Equipment Frames: Freestanding, modular units designed for telecommunications terminal support and coordinated with dimensions of units to be supported.

2. Module Dimension: Width compatible with EIA 310 standard, 19-inch panel mounting.

3. Finish: Manufacturer's standard, baked-polyester black powder coat.

C. Floor-Mounted Racks: Modular-type, construction.

1. Vertical and horizontal cable management channels, top and bottom cable troughs, grounding lug.

2. Baked-polyester black powder coat finish.

D. Modular Freestanding Cabinets:

1. Removable and lockable side panels.

2. Hinged and lockable front and rear doors.

3. Adjustable feet for leveling.

4. Screened ventilation openings in the front and rear door.

5. Cable access provisions in the roof and base.

6. Grounding bus bar.

7. Roof or door mounted, 550-cfm fan with filter.

8. Power strip.

9. Baked-polyester black powder coat finish.

10. Cabinets keyed alike.

E. Cable Management for Equipment Frames:

1. Metal, with integral wire retaining fingers.

2. Baked-polyester black powder coat finish.

3. Vertical cable management panels shall have front and rear channels, with covers.

4. Provide horizontal crossover cable manager at the top of each relay rack, with a minimum height of two rack units each.

5. Horizontal cable managers shall have extended covers to hide patch cables lacing into vertical cable managers.

2.2 UTP FEEDER CABLE

A. Manufacturers: Subject to compliance with requirements, provide products by one of the following:

1. Berk-Tek; a Nexans Company

2. Ortronics, Inc.

3. CommScope, Inc

4. Leviton

5. General Cable

6. Siemon Co.

7. Mohawk

8. ADC

B. Description: 100-ohm, see Drawings for number of pairs formed into 25-pair binder groups covered with a thermoplastic jacket.

1. Comply with ICEA S-90-661 for mechanical properties.

2. Comply with ANSI/TIA/EIA-568-B.1 for performance specifications.

3. Comply with ANSI/TIA/EIA-568-B.2.

4. Listed and labeled by an NRTL acceptable to authorities having jurisdiction as complying with UL 444 and NFPA 70 for the following types:

a. Communications Riser Rated: Type CMR or CMP, complying with UL 1666.

2.3 UTP FEEDER CABLE HARDWARE

A. Manufacturers: Subject to compliance with requirements, provide products by one of the following:

1. Ortronics
2. CommScope, Inc
3. Leviton
4. Siemon
5. Hubbell
6. Panduit
7. ADC

B. General Requirements for Cable Connecting Hardware: Comply with TIA/EIA-568-B.2, IDC type, with modules designed for punch-down caps or tools. Cables shall be terminated with connecting hardware of same category or higher. Connectivity solution shall be manufactured by the same company for an end-to-end solution.

C. Connecting Blocks (voice feeder only): 110-style IDC for Category 3. Provide blocks for the number of cables terminated on the block, plus 20 percent spare. Integral with connector bodies, including plugs and jacks where indicated.

D. Cross-Connect: Modular array of connecting blocks arranged to terminate building feeder cables and permit interconnection between cables.

1. Number of Terminals per Field: One for each conductor in assigned cables.

2.4 OPTICAL FIBER CABLE

A. Manufacturers: Subject to compliance with requirements, provide products by one of the following:

1. Berk-Tek; a Nexans Company.
2. Corning Cable Systems.
3. Mohawk, a division of Belden CDT.

4. Siemon Co.

5. CommScope, Inc

6. General Cable

B. Description: Multimode, 50/125-micrometer, number of strands as required, nonconductive dielectric, 900 UM tight buffered, optical fiber cable.

1. Comply with ICEA S-83-596 for mechanical properties.

2. Comply with ANSI/TIA/EIA-568-B.3 for performance specifications.

3. Comply with ANSI/TIA/EIA-492AAAA for detailed specifications.

4. Listed and labeled by an NRTL acceptable to authorities having jurisdiction as complying with UL 444, UL 1651, and NFPA 70 for the following types:

a. Riser Rated, Nonconductive: Type OFNR or OFNP, complying with UL 1666.

6. Maximum Attenuation: 3.50 dB/km at 850 nm; 1.5 dB/km at 1300 nm. Attenuation shall be measured in accordance with ANSI/EIA/TIA-455-46, 53 or 61.

7. Minimum Modal Bandwidth: 160 MHz-km at 850 nm; 500 MHz-km at 1300 nm.

8. Information transmission capacity shall be measured in accordance with ANSI/EIA/TIA-455-51 or 30, performed at 23 degrees Celsius $\pm$ 5 degrees.

9. Bandwidth: 200 MHZ – km @ 850 nm; 800 MHZ – km @ 1300 nm.

C. Description: Single mode, 8.3/125-micrometer, number of strands as shown on drawings, nonconductive dielectric, 900 UM tight buffered, optical fiber cable.

1. Comply with ICEA S-83-596 for mechanical properties.

2. Comply with ANSI/TIA/EIA-568-B.3 for performance specifications.

3. Comply with ANSI/TIA/EIA-492BAAA for detailed specifications.

4. Listed and labeled by an NRTL acceptable to authorities having jurisdiction as complying with UL 444, UL 1651, and NFPA 70 for the following types:

a. Riser Rated, Nonconductive: Type OFNR or OFNP, complying with UL 1666.

10. Maximum Attenuation: 0.5 dB/km at 1310 nm and 0.5 dB/km at 1550 nm.

11. Mode Field Diameter: Between 8 and 10 microns, ± 10%.

12. Dispersion: Zero dispersion wavelengths, 1310 nm ± 10 nm, ANSI/TIA/EIA-455-169 or ANSI/TIA/EIA-455-175.

13. Cut-off wavelength shall be less than 1279 nm measured in accordance with ANSI/TIA/EIA-455-170.

14. Individual fiber tube colors per ANSI/TIA/EIA-606-A.

D. Jacket:

1. Jacket Color: Orange for multimode 50/125-micrometer cable and Yellow for single mode 8.3/125 micrometer cable.

2. Cable cordage jacket, fiber, unit, and group color shall be according to ANSI/TIA/EIA-598-B.

3. Imprinted with fiber count, fiber type, and aggregate length at regular intervals not to exceed 40 inches.

2.5 OPTICAL FIBER CABLE HARDWARE

A. Manufacturers: Subject to compliance with requirements, provide products by one of the following:

1. Hubbell

2. Ortronics, Inc.

3. 3M

4. ADC

5. Siemon Co.

6. Leviton

7. Panduit

8. CommScope, Inc

B. Cross-Connects and Patch Panels: Fiber panels shall be available in 1RU, 2RU and 4RU versions. Multi-mode and single mode fibers shall be terminated in separate enclosures.

C. Coordinate subparagraph below with Drawings for quantity of fields.

1. Number of Connectors per Field: One for each fiber of cable or cables assigned to field, plus spares and blank positions adequate to suit specified expansion criteria.

2. Patch Cables: Factory-made, dual-fiber patch cables in 1-, 3- and 5-meter lengths.

D. Cable Connecting Hardware:

1. Comply with Optical Fiber Connector Intermate ability Standards (FOCIS) specifications of ANSI/TIA/EIA-604-2, ANSI/TIA/EIA-604-3-A, and ANSI/TIA/EIA-604-12. Comply with ANSI/TIA/EIA-568-B.3.

2. Quick-connect, simplex and duplex, Type SC connectors. Insertion loss not more than 0.75 dB. Minimum return loss of 20 dB.

3. Type SFF connectors may be used in termination racks, panels, and equipment packages.

4. The connector shall have optical axial pull strength at 2.2N at 0-degree angle and 2.2N at 90-degree angle, with a maximum 0.5 dB increase in attenuation in accordance with ANSI/TIA/EIA-455-6B.

2.6 IDENTIFICATION PRODUCTS

A. Comply with TIA/EIA-606-A and UL 969 for a system of labeling materials, including label stocks, laminating adhesives, and inks used by label printers.

2.7 SOURCE QUALITY CONTROL

A. Factory test cables on reels according to ANSI/TIA/EIA-568-B.1.

B. Factory test UTP cables according to ANSI/TIA/EIA-568-B.2.

C. Factory test optical fiber cables according to ANSI/TIA/EIA-526-14-A and ANSI/TIA/EIA-568-B.3.

D. Cable will be considered defective if it does not pass tests and inspections.

E. Prepare test and inspection reports.

F. Optical fiber cable strands shall be tested using an OTDR. Test results shall conform to ANSI/TIA/EIA-526-7 for single mode and ANSI/TIA/EIA-526-14A for multimode.

PART 3 EXECUTION

3.1 ENTRANCE FACILITIES

A. Coordinate backbone cabling with the protectors and demarcation point provided by communications service entrance facilities provider with BIT/RCDD.

3.2 CABLING METHODS

A. Cabling Method: Install cables in raceways and ladder racks except within equipment racks and cabinets. Conceal raceway and cables except in unfinished spaces.

1. Comply with requirements for raceways and boxes specified in Division 26 Section 26050.

B. Cabling Method: Conceal conductors and cables in accessible ceilings, walls, and floors where possible.

C. Cabling within Enclosures: Bundle, lace, and train cables within enclosures. Connect to terminal points with no excess and without exceeding manufacturer's limitations on bending radii. Provide and use lacing bars and distribution spools.

3.3 INSTALLATION OF CABLES

A. Comply with NECA 1.

B. General Requirements for Cabling:

1. Comply with ANSI/TIA/EIA-568-B.1.

2. Comply with BICSI ITSIM, Ch. 6, "Cable Termination Practices."

3. Install 110-style IDC termination hardware unless otherwise indicated.

4. Terminate all conductors; no cable shall contain un-terminated elements. Make terminations only at indicated outlets, terminals, cross-connects, and patch panels.

5. Cables shall not be spliced. Secure and support cables at intervals not exceeding 30 inches and not more than 6 inches from cabinets, boxes, fittings, outlets, racks, frames, and terminals.

6. Install lacing bars to restrain cables, to prevent straining connections, and to prevent bending cables to smaller radii than minimums recommended by manufacturer.

7. Bundle, lace, and train conductors to terminal points without exceeding manufacturer's limitations on bending radii, but not less than radii specified in BICSI ITSIM, "Cabling Termination Practices" Chapter. Use lacing bars and distribution spools.

15. Do not install bruised, kinked, scored, deformed, or abraded cable. Do not splice cable between termination, tap, or junction points. Remove and discard cable if damaged during installation and replace it with new cable.

16. In the communications equipment room, install a 25-foot- long service loop on each end of cable.

17. Pulling Cable: Comply with BICSI ITSIM, Ch. 4, "Pulling Cable." Monitor cable pull tensions.

C. UTP Cable Installation:

1. Comply with ANSI/TIA/EIA-568-B.2.

2. Do not untwist UTP cables more than 1/2 inch from the point of termination to maintain cable geometry.

3. Do not remove more than 1/2 inch of the outer jacket.

D. Optical Fiber Cable Installation:

1. Comply with ANSI/TIA/EIA-568-B.3.

2. Cable may be terminated on connecting hardware that is rack or cabinet mounted.

E. Open-Cable Installation:

1. Install cabling with horizontal and vertical cable guides in telecommunications spaces with terminating hardware and interconnection equipment.

2. Cable shall not be run through structural members or in contact with pipes, ducts, or other potentially damaging items.

F. Group connecting hardware for cables into separate logical fields.

G. Separation from EMI Sources:

1. Comply with BICSI TDMM and ANSI/TIA/EIA-569-B recommendations for separating unshielded copper voice and data communication cable from potential EMI sources, including electrical power lines and equipment.

2. Separation between open communications cables or cables in nonmetallic raceways and unshielded power conductors and electrical equipment shall be as follows:

   a. Electrical Equipment Rating Less Than 2 kVA: A minimum of 5 inches.

   b. Electrical Equipment Rating between 2 and 5 kVA: A minimum of 12 inches.

   c. Electrical Equipment Rating More Than 5 kVA: A minimum of 24 inches.

3. Separation between communications cables in grounded metallic raceways and unshielded power lines or electrical equipment shall be as follows:

   a. Electrical Equipment Rating Less Than 2 kVA: A minimum of 2-1/2 inches.

   b. Electrical Equipment Rating between 2 and 5 kVA: A minimum of 6 inches.

   c. Electrical Equipment Rating More Than 5 kVA: A minimum of 12 inches.

4. Separation between communications cables in grounded metallic raceways and power lines and electrical equipment located in grounded metallic conduits or enclosures shall be as follows:

   a. Electrical Equipment Rating Less Than 2 kVA: No requirement.

   b. Electrical Equipment Rating between 2 and 5 kVA: A minimum of 3 inches.

   c. Electrical Equipment Rating More Than 5 kVA: A minimum of 6 inches.

5. Separation between Communications Cables and Electrical Motors and Transformers, 5 kVA or HP and Larger: A minimum of 48 inches.

6. Separation between Communications Cables and Fluorescent Fixtures: A minimum of 12 inches.

3.4 IDENTIFICATION

A. Identify system components, cabling, and cabling complying with ANSI/TIA/EIA-606-A. Comply with requirements for identification specified.

B. See Division 27 Section "Communications Horizontal Cabling" for additional identification requirements. See Evaluations for discussion about ANSI/TIA/EIA standard as it applies to this Section. Paint and label colors for equipment identification shall comply with ANSI/TIA/EIA-606-A.

C. Comply with requirements in Division 27 Section "Communications Horizontal Cabling" for cable and asset management software.

D. Cable Schedule: Install in a prominent location in each equipment room and cabling closet. List incoming and outgoing cables and their designations, origins, and destinations. Protect with rigid frame and clear plastic cover. Furnish an electronic copy of final comprehensive schedules for Project.

E. Cabling Administration Drawings: Show building floor plans with cabling administration-point labeling. Identify labeling convention and show labels for telecommunications closets, backbone pathways and cables, terminal hardware and positions, horizontal cables, work areas and workstation terminal positions, grounding buses and pathways, and equipment grounding conductors.

F. Cable and Wire Identification:

1. Label each cable within 6 inches of each termination and tap, where it is accessible in a cabinet or junction or outlet box, and elsewhere as indicated.

2. Each wire connected to building-mounted devices is not required to be numbered at device if color of wire is consistent with associated wire connected and numbered within panel or cabinet.

3. Label each terminal strip and screw terminal in each cabinet, rack, or panel.

   a. Individually number cabling conductors connected to terminal strips and identify each cable or cabling group being extended from a panel or cabinet to a building-mounted device with name and number of particular device as shown.

   b. Label each unit and field within distribution racks and frames.

4. Identification within Connector Fields in Equipment Rooms and Cabling Closets: Label each connector and each discrete unit of cable-terminating and connecting hardware.

G. Labels shall be preprinted or computer-printed type with printing area and font color that contrasts with cable jacket color but still complies with requirements in ANSI/TIA/EIA 606-A, for the following:

1. Cables use flexible vinyl or polyester that flexes as cables are bent.

3.5 FIELD QUALITY CONTROL

A. Perform tests and inspections.

B. Tests and Inspections:

1. Visually inspect UTP and optical fiber jacket materials for NRTL certification markings. Inspect cabling terminations in communications equipment rooms for compliance with color-coding for pin assignments and inspect cabling connections for compliance with ANSI/TIA/EIA-568-B.1.

2. Visually inspect cable placement, cable termination, grounding and bonding, equipment and patch cables, and labeling of components.

3. Test UTP copper cabling for DC loop resistance, shorts, opens, intermittent faults, and polarity between conductors. Test operation of shorting bars in connection blocks. Test cables after termination but not cross-connection.

a. Test instruments shall meet or exceed applicable requirements in ANSI/TIA/EIA-568-B.2. Perform tests with a tester that complies with performance requirements in "Test Instruments (Normative)" Annex, complying with measurement accuracy specified in "Measurement Accuracy (Informative)" Annex. Use only test cables and adapters that are qualified by test equipment manufacturer for channel or link test configuration.

4. Optical Fiber Cable Tests:

a. Test instruments shall meet or exceed applicable requirements in ANSI/TIA/EIA-568-B.1. Use only test cables and adapters that are qualified by test equipment manufacturer for channel or link test configuration.

b. Link End-to-End Attenuation Tests:

i. Horizontal and multimode backbone link measurements: Test at 850 or 1300 nm in 1 direction according to ANSI/TIA/EIA-526-14-A, Method B, One Reference Jumper.

ii. Attenuation test results for backbone links shall be less than 2.0 dB. Attenuation test results shall be less than that calculated according to equation in ANSI/TIA/EIA-568-B.1.

C. Data for each measurement shall be documented. Data for submittals shall be printed in a summary report that is formatted similar to Table 10.1 in BICSI TDMM, or transferred from the instrument to the computer, saved as text files, and printed and submitted.

D. Remove and replace cabling where test results indicate that they do not comply with specified requirements.

E. End-to-end cabling will be considered defective if it does not pass tests and inspections.

F. Prepare test and inspection reports.

3.6 WARRANTY

A. The Structured Cabling System shall carry a manufacturer's 25-year product, labor and applications assurance warranty. Manufacturer and BIT/RCDD shall perform an end-to-end audit on infrastructure prior to releasing warranty.

END OF SECTION

PART 1 GENERAL

1.1 RELATED DOCUMENTS

A. Drawings and general provisions of the Contract, including General and Supplementary Conditions and Division 01 Specification Sections, apply to this Section.

1.2 SUBMITTALS

A. Product Data:

1. For coaxial cable, include the following installation data:

a. Nominal OD.

b. Minimum bending radius.

a. Maximum pulling tension.

1.3 QUALITY ASSURANCE

A. Testing Agency Qualifications: An NRTL.

1. Testing Agency's Field Supervisor: Currently certified by BICSI as an RCDD to supervise on-site testing.

B. Surface-Burning Characteristics: As determined by testing identical products according to ASTM E 84 by a qualified testing agency. Identify products with appropriate markings of applicable testing agency.

1. Flame-Spread Index: 25 or less.

2. Smoke-Developed Index: 50 or less.

C. Electrical Components, Devices, and Accessories: Listed and labeled as defined in NFPA 70, by a qualified testing agency, and marked for intended location and application.

1.4 COAXIAL BACKBONE CABLING

A. Coaxial Backbone Cabling

1. Provide 2 GHz 75-ohm coaxial cable for Video and Broadband (CATV) applications.

PART 2 PRODUCTS

2.1 COAXIAL BACKBONE CABLING

A. Manufacturers: Subject to compliance with requirements, provide products by one of the following:

1. Alpha Wire Company.

2. Belden CDT Inc.; Electronics Division.

3. Coleman Cable, Inc.

4. Siemon Company.

5. General Cable

6. CommScope, Inc

B. General Coaxial Cable Requirements: Broadband type, recommended by cable manufacturer specifically for broadband data transmission applications. Coaxial cable and accessories shall have 75-ohm nominal impedance with a return loss of 20 dB maximum from 7 to 806 MHz.

C. RG-11/U: NFPA 70, Type CATV.

1. No. 14 AWG, solid, copper-covered steel conductor.

2. Gas-injected, foam-PE insulation.

3. Double shielded with 100 percent aluminum polyester tape and 60 percent aluminum braid.

4. Jacketed with sunlight-resistant, black PVC or PE.

5. Suitable for outdoor installations in ambient temperatures ranging from minus 40 to plus 85 deg C.

D. NFPA and UL compliance listed and labeled by an NRTL acceptable to authorities having jurisdiction as complying with UL 1655 and with NFPA 70, "Radio and Television Equipment" and "Community Antenna Television and Radio Distribution" Articles. Types are as follows:

1. CATV Riser Rated: Type CATVR or CATVP, complying with UL 1666.

E. Cables shall be 100 percent sweep tested for attenuation and signal return loss (SRL) throughout the entire frequency spectrum.

PART 3 EXECUTION

3.1 COAXIAL BACKBONE CABLING

A. Coaxial backbone cables shall be installed by the LVLTC per the manufacturer's installation recommendations.

B. Coaxial backbone cables shall have no physical defects such as cuts, tears or bulges in the outer jacket. Coaxial backbone cables with defects shall be replaced.

C. The LVLTC shall install coaxial backbone cables in a neat and workmanlike manner per the BICSI Installation Manual. The LVLTC shall maintain the following clearances from EMI sources:

1. Power – 12 inches
2. Fluorescent Lights – 12 inches
3. Transformers – 36 inches

3.2 FIELD QUALITY CONTROL

A. Installed cables shall pass the testing requirements of ANSI/TIA/EIA-568-B.

B. Test and Inspections:

1. Visually inspect coaxial cable jacket materials for NRTL certification markings.
2. Visually inspect cable placement, cable termination, grounding and bonding, equipment, and labeling of components.

D. Remove and replace cabling where test results indicate that they do not comply with specified requirements.

E. End-to-end cabling will be considered defective if it does not pass tests and inspections.

F. Prepare test and inspection reports.

END OF SECTION

PART 1 GENERAL

1.1 RELATED DOCUMENTS

A. Drawings and general provisions of the Contract, including General and Supplementary Conditions and Division 01 Specification Sections, apply to this Section.

1.2 EXTRA MATERIALS

A. Furnish extra materials that match products installed and that are packaged with protective covering for storage and identified with labels describing contents.

1. Patch-Panel Units: 10% of each type.

2. Work Area outlets including covers and jacks: 10% of each type.

PART 2 PRODUCTS

2.1 COAXIAL CABLE HARDWARE

A. Manufacturers: Subject to compliance with requirements, provide products by one of the following:

1. Aim Electronics

2. Leviton

3. Siemon

4. General Cable

5. CommScope, Inc

B. Coaxial-Cable Connectors: Type F connectors, 75 ohms.

C. Connectors shall be sized to fit the appropriate cable being installed.

D. Patch panels shall support F type connectors.

E. F type connectors shall meet or exceed the requirements of ANSI/SCTE 02 1997.

PART 3 EXECUTION

3.1 TERMINATIONS

A. Splitter and tap ports shall be capped with 75-ohm terminators or a video display terminal as applicable.

END OF SECTION

PART 1 GENERAL

1.1 RELATED DOCUMENTS

A. General provisions of the Contract, including General and Supplementary Conditions and Division 01 Specification Sections, apply to this Section.

1.2 SUMMARY

A. Section Includes:

1. Pathways.
2. UTP cabling.
3. Cable connecting hardware, patch panels, and cross-connects.
4. Telecommunications outlet/connectors.
5. Cabling system identification products.
6. Cable management system.

B. Related Sections:

1. Division 27 Section "Communications Backbone Cabling" for voice and data cabling associated with system panels and devices.

1.3 DEFINITIONS

A. BICSI: Building Industry Consulting Service International.

B. Cross-Connect: A facility enabling the termination of cable elements and their interconnection or cross-connection.

C. EMI: Electromagnetic interference.

D. IDC: Insulation displacement connector.

E. LAN: Local area network.

F. Outlet/Connectors: A connecting device in the work area on which horizontal cable or outlet cable terminates.

G. RCDD: Registered Communications Distribution Designer.

H. UTP: Unshielded twisted pair.

1.4 HORIZONTAL CABLING DESCRIPTION

A. Horizontal cable and its connecting hardware provide the means of transporting signals between the telecommunications outlet/connector and the horizontal cross-connect located in the communications equipment room. This cabling and its connecting hardware are called "permanent link," a term that is used in the testing protocols.

1. ANSI/TIA/EIA-568-B.1 requires that a minimum of two telecommunications outlet/connectors be installed for each work area.

2. Horizontal cabling shall contain no more that one transition point or consolidation point between the horizontal cross-connect and the telecommunications outlet/connector.

3. Bridged taps and splices shall not be installed in the horizontal cabling.

4. Splitters shall not be installed as part of the optical fiber cabling.

B. A work area is approximately 100 sq. ft. and includes the components that extend from the telecommunications outlet/connectors to the station equipment.

C. The maximum allowable horizontal cable length is 250 feet. This maximum allowable length does not include an allowance for the length of 16 feet to the workstation equipment. The maximum allowable length does not include an allowance for the length of 16 feet in the horizontal cross-connect.

1.5 PERFORMANCE REQUIREMENTS

A. General Performance: Horizontal cabling system shall comply with transmission standards in ANSI/TIA/EIA-568-B.1, when tested according to test procedures of this standard.

1.6 SUBMITTALS

A. Product Data: For each type of product indicated.

1. For UTP cable, include the following installation data for each type used:

a. Nominal OD.

b. Minimum bending radius.

b. Maximum pulling tension.

B. Shop Drawings:

1. System Labeling Schedules: Electronic copy of labeling schedules, in software and format selected by Owner.

2. System Labeling Schedules: Electronic copy of labeling schedules that are part of the cabling and asset identification system of the software.

3. Cabling administration drawings and printouts.

4. Cabling diagrams to show typical cabling schematics, including the following:

   a. Cross-connects.

   b. Patch panels.

   c. Patch cables.

5. Cross-connects and patch panels. Detail mounting assemblies and show elevations and physical relationship between the installed components.

C. Samples: For workstation outlets, jacks, jack assemblies, in specified finish, one for each size and outlet configuration and faceplates for color selection and evaluation of technical features.

D. Qualification Data: For Installer, layout technician, installation supervisor, and field inspector.

E. Source quality-control reports.

F. Field quality-control reports.

G. Maintenance Data: For splices and connectors to include in maintenance manuals.

H. Software and Firmware Operational Documentation:

1. Software operating and upgrade manuals.

2. Program Software Backup: On magnetic media or compact disk, complete with data files.

3. Device address list.

4. Printout of software application and graphic screens.

1.7 QUALITY ASSURANCE

A. Testing Agency Qualifications: An NRTL.

1. Testing Agency's Field Supervisor: Currently certified by BICSI as an RCDD to supervise on-site testing.

B. Surface-Burning Characteristics: As determined by testing identical products according to ASTM E 84 by a qualified testing agency. Identify products with appropriate markings of applicable testing agency.

1. Flame-Spread Index: 25 or less.

2. Smoke-Developed Index: 50 or less.

C. Electrical Components, Devices, and Accessories: Listed and labeled as defined in NFPA 70, by a qualified testing agency, and marked for intended location and application.

1.8 DELIVERY, STORAGE, AND HANDLING

A. Test cables upon receipt at Project site.

1. Test each pair of UTP cable for open and short circuits.

1.9 PROJECT CONDITIONS

A. Environmental Limitations: Do not deliver or install cables and connecting materials until wet work in spaces is complete and dry, and temporary HVAC system is operating and maintaining ambient temperature and humidity conditions at occupancy levels during the remainder of the construction period.

1.10 COORDINATION

A. Coordinate layout and installation of telecommunications pathways and cabling with BIT/RCDD and the Agency Representative.

B. Coordinate telecommunications outlet/connector locations with location of power receptacles at each work area.

1.11 SOFTWARE SERVICE AGREEMENT

A. Technical Support: Beginning with Substantial Completion, provide software support for two years.

B. Upgrade Service: Update software to latest version at Project completion. Install and program software upgrades that become available within two years from date of Substantial Completion. Upgrading software shall include operating system. Upgrade shall include new or revised licenses for use of software.

1. Provide 30 days' notice to Owner to allow scheduling and access to system and to allow Owner to upgrade computer equipment if necessary.

1.12 EXTRA MATERIALS

A. Furnish extra materials that match products installed and that are packaged with protective covering for storage and identified with labels describing contents.

1. Patch-Panel Units: 10% of each type.

2. Connecting Jacks: 10% of each type.

3. Device Plates: 10% of each type.

PART 2 PRODUCTS

2.1 UTP CABLE

A. Manufacturers: Subject to compliance with requirements, provide products by one of the following:

1. Berk-Tek; a Nexans company.
2. ADC
3. Siemon Co.
4. Mohawk
5. Belden
6. CommScope, Inc

B. Description: 100-ohm, 4-pair UTP, 250 MHz certified cable, covered with a **Blue** thermoplastic jacket or as directed by the US Virgin Islands RCDD.

1. Comply with ICEA S-90-661 for mechanical properties.
2. Comply with ANSI/TIA/EIA-568-B.1 for performance specifications.
3. Comply with ANSI/TIA/EIA-568-B.2, Category 6.
4. Listed and labeled by an NRTL acceptable to authorities having jurisdiction as complying with UL 444 and NFPA 70 for the following types:
   a. Communications, Plenum Rated: Type CMP.

2.2 UTP CABLE HARDWARE

A. Manufacturers: Subject to compliance with requirements, provide products by one of the following:

1. Hubbell
2. Siemon Co.
3. ADC
4. Ortronics, Inc.
5. Panduit
6. Leviton
7. CommScope, Inc

B. General Requirements for Cable Connecting Hardware: Comply with ANSI/TIA/EIA-568-B.2, IDC type, with modules designed for punch-down caps or tools. Cables shall be terminated with connecting hardware of same category or higher.

C. Connecting Jack: 110-style IDC rated for Category 6. Integral with connector bodies, including plugs and jacks where indicated.

D. Cross-Connect: Modular array of connecting blocks arranged to terminate building cables and permit interconnection between cables.

1. Number of Terminals per Field: One for each conductor in assigned cables.

E. Patch Panel: Modular panels housing multiple-numbered jack units with IDC-type connectors at each jack for permanent termination of pair groups of installed cables. Patch panels shall support labels and colored icons. Patch panels must have rear management bar for strain relief of horizontal cables. Coordinate subparagraph below with Drawings for quantity of fields.

1. Number of Jacks per Field: One for each four-pair UTP cable indicated.

F. Jacks and Jack Assemblies: Modular, color-coded, eight-position modular receptacle units with integral IDC S310-type terminals. Jacks shall be universally wired, angled, have a rear strain relief cap, and protective color-matching rubber door.

G. Patch Cables:

1. Patch cables shall be 100% factory-made and tested four-pair cables available in 10 feet lengths not to exceed 33 feet, white in color. Patch cables shall be made by the same manufacturer as the installed system to ensure a full channel warranty. Work area patch cables shall have bend-relief-compliant boots to ensure Category 6 performance. Patch cables shall have latch guards to protect against snagging and terminated with an eight-position modular plug at each end. Work area patch cables shall be provided for 100% of horizontal cables terminated.

2.3 TELECOMMUNICATIONS OUTLET/CONNECTORS

A. Jacks: 100-ohm, balanced, twisted-pair connector; four-pair, eight-position modular. Comply with ANSI/TIA/EIA-568-B.1.

B. Workstation Outlets: Four port-connector assemblies mounted in single faceplate.

1. Plastic Faceplate: High-impact plastic. Coordinate color with Division 26 Section 26050 and Interior Designer.

2. For use with snap-in jacks accommodating any combination of UTP, optical fiber, and coaxial work area cables.

a. Flush mounting jacks, positioning the cable at a 45-degree angle.

3. Legend: Snap-in, clear-label covers and machine-printed paper inserts.

2.4 IDENTIFICATION PRODUCTS

A. Comply with ANSI/TIA/EIA-606-A and UL 969 for labeling materials, including label stocks, laminating adhesives, and inks used by label printers.

B. Comply with requirements in Division 26 Section 26010.

2.5 CABLE MANAGEMENT SYSTEM

A. Manufacturers: Subject to compliance with requirements, provide products by the following:

B. Description: Computer-based cable management system, with integrated database and graphic capabilities.

C. Document physical characteristics by recording the network, TIA/EIA details, and connections between equipment and cable.

D. Information shall be presented in database view, schematic plans, or technical drawings.

1. Microsoft Visio Professional or AutoCAD drawing software shall be used as drawing and schematic plans software.

E. System shall interface with the following testing and recording devices:

1. Direct upload tests from circuit testing instrument into the personal computer.

2. Direct download circuit labeling into labeling printer.

2.6 SOURCE QUALITY CONTROL

A. Testing Agency: Engage a qualified testing agency to evaluate cables.

B. Factory test UTP and optical fiber cables on reels according to ANSI/TIA/EIA-568-B.1.

C. Factory test UTP cables according to ANSI/TIA/EIA-568-B.2.

D. Cable will be considered defective if it does not pass tests and inspections.

E. Prepare test and inspection reports.

PART 3 EXECUTION

3.1 CABLING METHODS

A. Cabling Method: Install cables in raceways provided by Division 26 and adjustable cable straps except within cabinets, desks, and counters. Conceal cables except in unfinished spaces.

1. Install plenum cable in environmental air spaces, including plenum ceilings.

2. Comply with requirements for raceways and boxes specified in Division 26 Section 26050.

B. Cabling Method: Conceal conductors and cables in accessible ceilings, walls, and floors where possible.

C. Cabling within Enclosures: Bundle, lace, and train cables to terminal points with no excess and without exceeding manufacturer's limitations on bending radii. Provide and use lacing bars and distribution spools.

3.2 INSTALLATION OF CABLES

A. Comply with NECA 1.

B. General Requirements for Cabling:

1. Comply with ANSI/TIA/EIA-568-B.1.

2. Comply with BICSI ITSIM, Ch. 6, "Cable Termination Practices."

3. Install 110-style IDC termination hardware unless otherwise indicated.

4. Comply with the US Virgin Islands Telecommunications Distribution Manual.

5. Terminate conductors; no cable shall contain un-terminated elements. Make terminations only at indicated outlets, terminals, cross-connects, and patch panels.

6. Cables may not be spliced. Secure and support cables at intervals not exceeding 30 inches and not more than 6 inches from cabinets, boxes, fittings, outlets, racks, frames, and terminals.

7. Install lacing bars to restrain cables, to prevent straining connections, and to prevent bending cables to smaller radii than minimums recommended by manufacturer.

8. Bundle, lace, and train conductors to terminal points without exceeding manufacturer's limitations on bending radii, but not less than radii specified in BICSI ITSIM, "Cabling Termination Practices" Chapter. Install lacing bars and distribution spools.

9. Do not install bruised, kinked, scored, deformed, or abraded cable. Do not splice cable between termination, tap, or junction points. Remove and discard cable if damaged during installation and replace it with new cable.

10. In the communications equipment room, install a 10-foot- long service loop on each end of cable.

11. Pulling Cable: Comply with BICSI ITSIM, Ch. 4, "Pulling Cable." Monitor cable pull tensions.

C. UTP Cable Installation:

1. Comply with ANSI/TIA/EIA-568-B.2.

2. Do not untwist UTP cables more than 1/2 inch from the point of termination to maintain cable geometry.

3. Do not remove more than ½ inch of jacket material.

D. Open-Cable Installation:

1. Install cabling with horizontal and vertical cable guides in telecommunications spaces with terminating hardware and interconnection equipment.

2. Suspend UTP cable not in a wire way or pathway a minimum of 8 inches above ceilings by cable supports not more than 60 inches apart.

3. Cable shall not be run through structural members or in contact with pipes, ducts, or other potentially damaging items.

E. Group connecting hardware for cables into separate logical fields.

F. Separation from EMI Sources:

1. Comply with BICSI TDMM and ANSI/TIA/EIA-569-A for separating structural cable from potential EMI sources, including electrical power lines and equipment.

2. Separation between open communications cables or cables in nonmetallic raceways and unshielded power conductors and electrical equipment shall be as follows:

   a. Electrical Equipment Rating Less Than 2 kVA: A minimum of 5 inches.

   b. Electrical Equipment Rating between 2 and 5 kVA: A minimum of 12 inches.

   c. Electrical Equipment Rating More Than 5 kVA: A minimum of 24 inches.

4. Separation between communications cables in grounded metallic raceways and unshielded power lines or electrical equipment shall be as follows:

   a. Electrical Equipment Rating Less Than 2 kVA: A minimum of 2-1/2 inches.

   b. Electrical Equipment Rating between 2 and 5 kVA: A minimum of 6 inches.

   c. Electrical Equipment Rating More Than 5 kVA: A minimum of 12 inches.

5. Separation between communications cables in grounded metallic raceways and power lines and electrical equipment located in grounded metallic conduits or enclosures shall be as follows:

   a. Electrical Equipment Rating Less Than 2 kVA: No requirement.

   b. Electrical Equipment Rating between 2 and 5 kVA: A minimum of 3 inches.

   c. Electrical Equipment Rating More Than 5 kVA: A minimum of 6 inches.

6. Separation between Communications Cables and Electrical Motors and Transformers, 5 kVA or HP and Larger: A minimum of 48 inches.

7. Separation between Communications Cables and Fluorescent Fixtures: A minimum of 12 inches.

3.3 FIRESTOPPING

A. Comply with requirements in Division 07 Section "Through-Penetration Firestop Systems."

B. Comply with ANSI/TIA/EIA-569-B, Annex A, "Firestopping."

C. Comply with BICSI TDMM, "Firestopping Systems" Article.

3.4 IDENTIFICATION

A. Identify system components, cabling, and cabling complying with ANSI/TIA/EIA-606-A. Comply with requirements for identification specified in Division 26 Section 26010.

1. Color-code cross-connect fields. Apply colors to telecommunications terminal backboards, connections, covers, and labels.

B. Using cable management system software specified in Part 2, develop Cabling Administration Drawings for system identification, testing, and management. Use unique, alphanumeric designation for each cable and label cable, jacks, connectors, and terminals to which it connects with same designation. At completion, cable and asset management software shall reflect as-built conditions.

C. Comply with requirements in Division 09 Section "Interior Painting" for painting backboards. For fire-resistant plywood, do not paint over manufacturer's label.

D. Paint and label colors for equipment identity shall comply with ANSI/TIA/EIA-606-A.

E. Cable Schedule: Post in prominent location in each equipment room. List incoming and outgoing cables and their designations, origins, and destinations. Protect with rigid frame and clear plastic cover. Furnish an electronic copy of final comprehensive schedules for Project.

F. Cabling Administration Drawings: Show building floor plans with cabling administration-point labeling. Identify labeling convention and show labels for telecommunications rooms, backbone pathways and cables, terminal hardware and positions, horizontal cables, work areas and workstation terminal positions, grounding buses and pathways, and equipment grounding conductors. Follow convention of ANSI/TIA/EIA-606-A. Furnish electronic record of all drawings, in the latest version of AutoCad.

G. Cable and Wire Identification:

1. Label each cable within 6 inches of each termination and tap, where it is accessible in a cabinet or junction or outlet box, and elsewhere as indicated.

2. Each wire connected to building-mounted devices is not required to be numbered at device if color of wire is consistent with associated wire connected and numbered within panel or cabinet.

3. Exposed Cables and Cables in Ladder Rack: Label each cable at intervals not exceeding 15 feet.

4. Label each terminal strip and screw terminal in each cabinet, rack, or panel.

a. Individually number cabling conductors connected to terminal strips, and identify each cable or cabling group being extended from a panel or cabinet to a building-mounted device shall be identified with name and number of particular device as shown.

b. Label each unit and field within distribution racks and frames.

5. Identification within Connector Fields in Equipment Rooms and Cabling Closets: Label each connector and each discrete unit of cable-terminating and connecting hardware.

H. Labels shall be preprinted or computer-printed type with printing area and font color that contrasts with cable jacket color but still complies with requirements in ANSI/TIA/EIA-606-A.

1. Cables use flexible vinyl or polyester that flex as cables are bent.

3.5 FIELD QUALITY CONTROL

A. Perform tests and inspections.

B. Tests and Inspections:

1. Visually inspect UTP cable jacket materials for NRTL certification markings. Inspect cabling terminations in communications equipment rooms for compliance with color-coding for pin assignments and inspect cabling connections for compliance with ANSI/TIA/EIA-568-B.1.

2. Visually confirm Category 6, marking of outlets, cover plates, outlet/connectors, and patch panels.

3. Visually inspect cable placement, cable termination, grounding and bonding, equipment and patch cables, and labeling of all components.

4. UTP Performance Tests:

a. Perform the following tests according to ANSI/TIA/EIA-568-B.1 and ANSI/TIA/EIA-568-B.2:

i. Wire map.

ii. Length (physical vs. electrical, and length requirements).

iii. Insertion loss.

iv. Near-end crosstalk (NEXT) loss.

v. Power sum near-end crosstalk (PSNEXT) loss.

vi. Equal-level far-end crosstalk (ELFEXT).

vii. Power sum equal-level far-end crosstalk (PSELFEXT).

viii. Return loss.

ix. Propagation delay.

x. Delay skew.

5. Final Verification Tests: Perform verification tests for UTP systems after the complete communications cabling and workstation outlet/connectors are installed.

C. Document data for each measurement. Data for submittals shall be printed in a summary report that is formatted similar to Table 10.1 in BICSI TDMM, or transferred from the instrument to the computer, saved as text files, and printed and submitted.

D. End-to-end cabling will be considered defective if it does not pass tests and inspections.

E. Prepare test and inspection reports.

3.6 DEMONSTRATION

A. Engage a factory-authorized service representative to train Owner's maintenance personnel in cable-plant management operations, including changing signal pathways for different workstations, rerouting signals in failed cables, and keeping records of cabling assignments and revisions when extending cabling to establish new workstation outlets. Include training in cabling administration software.

3.7 WARRANTY

A. The Structured Cabling System shall carry a manufacturer's 25-year product, labor and applications assurance warranty. Manufacturer and BIT/RCDD shall perform an end-to-end audit on infrastructure prior to releasing warranty

END OF SECTION

PART 1 GENERAL

1.1 SECTION INCLUDES

A. Panels, enclosures, and covers.

B. Modules.

C. Patch panels.

D. Jacks.

E. Faceplates.

F. Accessories.

1. Couplers and adapters.
2. Fiber accessories.
3. Inline xDSL filters.
4. Modular plugs.
5. Patch cords.
6. Wall mount xDSL filters.

G. Contractor panel kits.

1.2 RELATED SECTIONS

A. Section 26 05 00 - Common Work Results for Electrical.

B. Section 26 05 48 - Vibration and Seismic Controls for Electrical Systems.

C. Section 26 27 16 - Electrical Cabinets and Enclosures.

1.3 REFERENCES

A. American Council for Terminal Attachments (ACTA).

B. American National Standards Institute (ANSI):

1. ANSI T1.421 - In-Line Filter for Use with Voiceband Terminal Equipment Operating on the Same Wire Pair with High Frequency (up to 12 MHz) Devices.

C. Electronic Industries Alliance (EIA).

D. Federal Communications Commission (FCC):

1. Part 68 of the FCC rules (47 C.F.R. Part 68) - Governs the direct connection of Terminal Equipment (TE) to the Public Switched Telephone Network (PSTN), and to wireline carrier-owned facilities used to provide private line services.

E. National Electrical Manufacturer Association (NEMA):

F. Society of Cable Engineers (SCTE):

1. ANSI/SCTE 02 - Specification for "F" Port, Female, Indoor.

G. Telecommunications General Requirements (GR):

1. GR-3123-CORE - Generic Requirements for Indoor Fiber Distribution Hubs.

2. GR-3125-CORE - Outdoor Fiber Distribution Hubs - new GR for FTTP.

H. Telecommunications Industry Association (TIA):

1. TIA 1096 - Telecommunications Telephone Terminal Equipment Connector Requirements for Connection of Terminal Equipment to the Telephone Network.

2. TIA/EIA 568-C.2 - Balanced Twisted-Pair Telecommunication Cabling and Components Standard.

I. Underwriters Laboratories (UL):

1. UL-94-V0 - Standard for Tests for Flammability of Plastic Materials for Parts in Devices and Appliances; burning stops within 10 seconds on a vertical specimen; drips of particles allowed if they are not inflamed.

2. UL 1863 - Standard for Communications-Circuit Accessories.
UL 2416 - Standard for Audio/Video, Information and Communication Technology Equipment Cabinet, Enclosure and Rack Systems.

J. Underwriters Laboratories Canada (ULc):

1.4 SUBMITTALS

A. Submit under provisions of Section 01 30 00 - Administrative Requirements.

B. Product Data:

1. Manufacturer's data sheets on each product to be used.

2. Preparation instructions and recommendations.

3. Storage and handling requirements and recommendations.

4. Installation methods.

C. Verification Samples: Submit two full size glass block units of each type, size, pattern and color.

D. Manufacturer's Certificates and Test Reports: Certify products meet or exceed specified requirements. Test reports should be within 12 months of bid date.

1.5 QUALITY ASSURANCE

A. Manufacturer Qualifications: Company specializing in manufacturing products specified in this section with a minimum ten years documented experience.

B. Products: Listed and classified by Underwriters Laboratories, Inc. as suitable for the purpose specified and indicated.

C. Mock-Up: Prior to starting work assemble sample panels for Architect's inspection and acceptance. Build in locations acceptable to the Architect. Construct sample panels with required accessories. Provide special features as directed.

1. Build sample panels for each different situation.

2. Retain sample panels during construction as a standard for judging completed work. Do not alter, move, or destroy sample panels until work is completed or removal is authorized.

1.6 DELIVERY, STORAGE, AND HANDLING

A. Store products in manufacturer's unopened packaging until ready for installation.

B. Store and handle in strict compliance with manufacturer's written instructions and recommendations.

C. Protect from damage due to weather, excessive temperature, and construction operations.

1.7 SEQUENCING

A. Ensure that products of this section are supplied to affected trades in time to prevent interruption of construction progress.

1.8 PROJECT CONDITIONS

A. Maintain environmental conditions (temperature, humidity, and ventilation) within limits recommended by manufacturer for optimum results. Do not install products under environmental conditions outside manufacturer's recommended limits.

1.9 WARRANTY

A. Provide manufacturers 10 Year limited Warranty.

PART 2 PRODUCTS

2.1 MANUFACTURERS

A. Acceptable Manufacturer: Suttle, which is located at: 1001 E. Highway 212; Hector, MN 55342; Toll Free Tel: 800-852-8662; Tel: 320-848-6711; Fax: 320-848-6218; Email:request info (suttle.sales@suttlesolutions.com); Web:https://www.suttlesolutions.com/designers_specifiers

3. Requests for substitutions will be considered in accordance with provisions of Section 01 60 00 - Product Requirements.

2.2 PANELS ENCLOSURES WITH COVERS

A. Basis of Design: MediaMAX Panels as manufactured and supplied by Suttle. For enhanced CAT6 and wireless connectivity and house ONT and residential gateways. Utilizes plastic components wherever possible to minimize wireless interference. Enclosure venting for heat dissipation. For greenfield and brownfield applications providing added space to secure gateways and next generation ONT and battery backup systems within new or existing media panels. Compatible with SOHO Access modules. Deep lid covers allow use of space in front of and above wiring panels.

1. Part Number: MXE-15P-1G2. 15 in (381 mm) MediaMAX panel (empty).

2. Part Number: MXE-15C-1G2. 15 in (381 mm) MediaMAX panel hinged vented cover.

3. Part Number: MXE-15E-1G2. 15 in (381 mm) MediaMAX panel (empty) with hinged vented cover.

4. Part Number: MXE-15C-4G2. 15 in (381 mm) MediaMAX panel expanded hinged vented deep-lid cover, 4 in (102 mm) deep.

5. Part Number: MXE-30P-1G2. 30 in (762 mm) MediaMAX panel (empty).

6. Part Number: MXE-30C-1G2. 30 in (762 mm) MediaMAX panel hinged vented cover.

7. Part Number: MXE-30E-1G2. 30 in (762 mm) MediaMAX panel (empty) with hinged vented cover.

8. Part Number: MXE-30E-2G2. 30 in (762 mm) MediaMAX panel with hinged vented cover, equipment shelves, adjustable mounting brackets, cable tie-downs, mounting screws and installation instructions.

9. Part Number: MXE-30E-3G2. 30 in (762 mm) MediaMAX panel with hinged vented cover, MXM-521 Gateway Termination Module, equipment shelves, adjustable mounting brackets, cable tie-downs, mounting screws, and installation instructions.

10. Part Number: MXE-30C-4G2. 30 in (762 mm) MediaMAX panel expanded hinged vented deep-lid cover, 4 in (102 mm) deep.

11. Part Number: MXE-45P-1G2. 45 in (1143 mm) MediaMAX panel (empty).

12. Part Number: MXE-45C-1G2. 45 in (1143 mm) MediaMAX panel hinged vented cover.

13. Part Number: MXE-45E-1G2. 45 in (1143 mm) MediaMAX panel (empty) with hinged vented cover.

14. Part Number: MXE-45C-4G2. 45 in (1143 mm) MediaMAX panel expanded hinged vented deep-lid cover, 4 in (102 mm) deep.

    a. Color: White.

    b. Listed: UL 2416, Issue 2, and ULc.

    c. Material: High impact, flame retardant thermoplastic, UL 94-V0 (indoor) rated.

15. Dimensions MXE-15 Series:

    a. Enclosures (HxWxD): 15.36 x 14.25 x 4.0 in (390 x 362 x 102 mm).

    b. Standard Covers (HxWxD): 17.8 x 17.5 x 1.11 (454 x 444 x 28 mm).

    c. Deep Lid Covers (HxWxD): 17.8 x 17.5 x 4.21 (454 x 444 x 107 mm).

16. Dimensions MXE-30 Series:

    a. Enclosures (HxWxD): 30.08 x 14.25 x 4.0 in (764 x 362 x 102 mm).

    b. Standard Covers (HxWxD): 33.30 x 17.5 x 1.11 (846 x 444 x 28 mm).

    c. Deep Lid Covers (HxWxD): 33.30 x 17.5 x 4.21 (846 x 444 x 107 mm).

17. Dimensions MXE-45 Series:

    a. Enclosures (HxWxD): 46.36 x 14.25 x 4.0 in (1178 x 362 x 102 mm).

    b. Standard Covers (HxWxD): 48.8 x 17.5 x 1.11 (1240 x 444 x 28 mm).

    c. Deep Lid Covers (HxWxD): 48.8 x 17.5 x 4.21 (1240 x 444 x 107 mm).

18. Panel Accessories:

    a. Part Number: MXE-ACC-1. 1 equipment shelf, 2 equipment brackets, 2 cable spools, 2 tie brackets, 4 cable ties, 12 screws.

    b. Part Number: MXE-ACC-2. 2 equipment shelves, 4 equipment brackets, 1 hook & loop strap 30 in (762 mm), 4 cable ties, 16 screws.

    c. Part Number: MXE-CCK. Cable connector kit.

    d. Part Number: MXE-DMK. Door mounting kit.

e. Part Number: MXE-ESB. 1 equipment shelf, 1 tie bracket, 1 hook and loop strap, 30 in (762 mm), 6 screws, 6 push-pin fasteners.

f. Part Number: MXE-MDK. Microduct kit.

g. Part Number: SAE-CAN. AC outlet kit, non-surge protected.

h. Part Number: SAE-GMT8. 2.5 in (64 mm) rubber grommets for enclosure entry and exit holes; 8 rubber grommets.

i. Part Number: SAE-LOCK. Lock accessory kit.

j. Part Number: SAE-PS3. 3-outlet AC power-strip with 34 in (864 mm) cord.

19. Panel Features:

a. Housing:

ii. Mount ONTs, gateways, battery backups and wiring modules in a single enclosure

iii. Mounting bracket and shelf design acceptS wide variety of equipment dimensions.

iv. 180-degree hinged cover for easy access.

b. Optimize for wireless connectivity: Minimize electrical interference to wireless components.

c. Heat dissipation and fire resistance design:

i. Ventilation design provides airflow and heat dissipation.

ii. Material: High impact, flame retardant thermoplastic, UL 94-V0 (indoor) rated.

iii. Meets latest fire resistance criteria for in-wall installation (UL 2416, Issue 2, Section 12.5, Communications Equipment Racks, Cabinets and Enclosures).

iv. Meets applicable Telcordia Generic Requirements, GR-63, for indoor housings.

d. Modular design:

i. Multiple cable ports for fiber cable and micro-duct terminations and power outlet locations.

ii. Convenient cable-tie locations along cabinet sides.

iii. Door design to allow for physical separation and security of equipment and modules.

e. Flexible design and light weight plastic:

i. Designed to accommodate new GPON, G.hn and G.fast equipment.

ii. Accepts fiber, copper, coax cables and terminations.

f. Basis of Design: SOHO Access Home Networking Enclosures as manufactured and supplied by Suttle. Fast, flexible, and clean distribution management solution for voice, data, video, and audio connections. Feature-rich, rugged enclosures.

20. Part Number: SAE-28NY. 28 in (711 mm) high enclosure.

    a. Dimensions (HxWxD): 28 x 14.25 x 3.75 in (711 x 362 x 95 mm).

21. Part Number: SAE-28DCNY. 28 in (711 mm) high enclosure with door cover.

    a. Dimensions (HxWxD): 30.3 x 16.5 x 4.10 in (770 x 419 x 104 mm),

22. Part Number: SADC-28VZ. 28 in (711 x mm) high door cover.

    a. Dimensions (HxWxD): 30.3 x 16.5 x 0.35 in (770 x 419 x 9 mm).

23. Part Number: SAE-42NY. 42 in (1067 mm) high enclosure.

    a. Dimensions (HxWxD): 42 x 14.25 x 3.75 in (1067 x 362 x 95 mm).

24. Part Number: SAE-42DDCNY. 42 in (1067 mm) high enclosure and door cover.

    a. Dimensions (HxWxD): 44.3 x 16.5 x 4.10 in (1125 x 419 x 104 mm).

25. Part Number: SADDC-1428. 42 in (1067 mm) high dual door cover.

    a. Dimensions (HxWxD): 44.3 x 16.5 x 0.35 in (1067 x 419 x 9 mm).

26. Part Number: SAM-EPM Enclosure Partition Module

27. Panel Features:

    a. Material: Steel. 16 gauge, 0.0598 in (1.519 mm).

        i. Finish: Powder coat.

28. Mounting: Flush mounted between sixteen-inch centered studs or surface mounted via recessed mounting holes.

29. Numerous cable entry knockouts.

30. Vertical and horizontal mounting hole pattern

31. Multiple cable tie attachment points.

32. UL listed for security alarm and fire signaling applications.

33. Enclosures ship with necessary installation hardware.

34. Door covers provide a knock-out for a security lock.

35. Enclosures not to be installed in a fire rated wall.

2.3 MODULES

A. Basis of Design: MediaMAX Data Modules as manufactured and supplied by Suttle. Supports up to five CAT6 data outputs and four 2-line voice outputs. Cable terminations utilize tool-less IDCs for improved transmission. This module allows for changes in wiring to be made quickly and easily with no tools. The signal is simply patched from the voice or data source to the desired outlet.

1. Part Number: MXM-521. CAT6 Gateway Termination module.

   a. Listed: UL and ULc.

   b. Input:

      i. Six RJ45 jacks.

      ii. Two RJ14 jacks.

   c. Output: Eight 4-pair tool-less IDCs.

   d. Wiring: 568A and 568B.

   e. Dimensions (HxWxD): 3.5 x 6.5 x 1 in (89 x 165 x 25 mm).

B. Basis of Design: MediaMAX Video Modules as manufactured and supplied by Suttle. Video splitter modules provide high quality and reliable video distribution with industry approved, digital ready splitters that meet ANSI/SCTE standards. Angled mounting brackets maximize enclosure space, minimize cable strain, and facilitate better cable management and ease of installation.

1. Part Number: SAM-RFH8. 1 x 8 RF splitter - 3 GHz.

   a. Insertion Loss (Maximum): 15 dB.

   b. Isolation (Minimum): 20 dB.

   c. Return Loss In (Minimum): 13 dB.

   d. Return Loss Out ((Minimum): 12 dB.

2. Frequency Range: 5 to 2400 MHz.

3. RFI Shielding: 130 dB.

4. Operating Temperature: Minus 40 to 140 degrees F.

5. "F" Ports: Meet ANSI/SCTE 02.

6. Dimensions for SAM-RF3 (HxWxD): 3.0 x 6.5 x 2.0 in (76 x 165 x 51 mm).

7. Dimensions: (HxWxD): 2.75 x 6.5 x 2.8 in (70 x 165 x 71 mm).

C. Basis of Design: SOHO Access 8-port Universal Patch Module as manufactured and supplied by Suttle. For custom patch configurations for patching phone, data, video or even fiber using SpeedStar connectors. A great solution for accommodating CorroShield corrosion protection jacks, or CAT6 jacks that aren't available in a typical patch panel.

1. Part number: SAM-SP8. 8-port universal patch panel.
2. Listed UL and ULc.
3. For use with SOHO Access Enclosures.
4. Phone, Data, Video, or even fiber patching on a single panel.
5. Mix and Match SpeedStar jacks to get exactly what is needed.
6. CAT6 capable with STAR6000C6 jacks.
7. Accepts SpeedStar CorroShield jacks for added corrosion protection in humid environments.
8. Dimensions (HxWxD): 3.5 x 6.5 x 3 in (89 x 165 x 76 mm).

D. Basis of Design: 3 in (76 mm) Blank Mounting Plate as manufactured and supplied by Suttle.

1. Part number: SAM-B.
2. Blank mounting plate for MediaMAX Panels and SOHO Access enclosures.
3. Includes double-stick adhesive foam and mounting pins.
4. Dimensions (HxW): 3 x 5.5 in (76 x 140 mm) mounting surface.

E. Basis of design: Push-Pin Replacement Kit (10 pieces) as manufactured and supplied by Suttle.

1. Part Number: SAM-NYL.
2. Replacement pushpins, plungers and grommets.
3. One package of 10 pushpins.
4. Tool-less push-pin fasteners.
5. Plastic composition does not interfere with wireless devices.
6. Quickly secure modules, brackets, and equipment shelves into MediaMAX Panels.

2.4 PATCH PANELS

A. Basis of Design: Patch panel as manufactured and supplied by Suttle. Steel construction with rolled edges to eliminate flexing. Rear input connectors are 110 IDC, front output jacks are RJ-45. Connectors can be wired in either 568A or 568B configurations.

1. Part Number: STAR19110C6-24. 24-port, CAT6 patch panel, 568A/B wiring, 19 in (483 mm) rack-mountable - 1RU 19 in (483 mm) rack.

2. Part Number: STAR191RU-12B. 12-port blank patch panel accepts all SpeedStar Modular Jacks (Copper, Fiber and Coax) and includes an integrated cable management bracket.

   a. Accessories:

      i. Part Number: STAR6000C6T. MediaMAX Jack - Tool-less Category 6 Jack

      ii. Part Number: 2-7001. CAT5e Modular Data Jack

      iii. Part Number: 2-7005. CAT3 Modular Voice Jack

      iv. Part Number: STAR600V6-RC. CAT3 Modular Voice Jack with CorroShield gel.

      v. Part Number: STAR500F-C. 3GHz F81 Barrel Connector

      vi. Part Number: STAR500SCGR-T. SC Fiber Adapter with trap door kit

3. Listed: UL and ULc.

4. Exceeds TIA/EIA-568-B Cat 6 performance specifications.

5. Supports bandwidth beyond 250 MHz.

6. Write-on label and number designations provide easy identification.

7. Rear cable management bar provides cable strain relief.

8. Multiple cable tie locations facilitate cable dressing.

9. Wiring: T568A or T568B.

10. Insertion: greater than 750 cycles.

11. Jack Housing: High impact, flame retardant thermoplastic, UL 94-V0 (indoor) rated.

12. IDC Blocks: Tin lead plated connector accepts 22-26 AWG solid UTP cable.

13. Contact Pressure: Greater than 0.22 lbs (100 grams).

14. Insulation Resistance: 500 megohms.

15. Contact Resistance: Less than 10 millohms.

16. Voltage/Current: Less than 140 VDC at 1.5 amps.

17. Dielectric Withstand: greater than 1000 VAC RMS at 60Hz.

18. Safety: Complies with Part 68, FCC Rules.

2.5 JACKS

A. Basis of Design: SpeedStar CAT3 Modular Voice Jack as manufactured and supplied by Suttle. Provide a modular solution for delivering multiple lines of voice service. Jacks with CorroShield gel protects against corrosion that can lead to loss of service and costly service calls. For use with SpeedStar faceplates, bezels and surface mount housings. The jack terminates up to 3-pair of 22 to 26 AWG wire.

1. Part Number: 2-7005. 6-Position, 6-Conductor Jack, 110 IDC Block.

2. Part number: STAR600V6-RCB. 6-Position, 6-Conductor Jack with Corroshield gel, 110 IDC Block.

3. Color: Electrical ivory.

4. Color: Light almond.

5. Listed: UL and ULc.

6. Easy installation from rear of faceplate.

7. Compatible with SpeedStar products (bezels, faceplates, and surface mount housings.

8. Terminates with standard 110 termination tools.

9. Dust covers for IDC terminations.

10. CorroShield gel equipped jacks protects from dust, moisture, and other components.

    a. Gelguard gel in the CorroShield products, is a nonhazardous mixture per OSHA's Hazard Communications Standard (29 CFR 1910.1200). An MSDS is not required. A product safety bulletin is available upon request.

11. Wiring: USOC.

12. Insertion Life: 750 insertions.

13. Housing: High impact, flame retardant thermoplastic, UL 94-V0 rated.

14. Contacts: 50 micro-inch (0.00127 mm) hard gold plating minimum with 100 micro-inch (0.00254 mm) nickel.

15. IDC Blocks: Tin lead plated connector accepts 22-26 AWG solid and stranded UTP cable.

16. Wire Retention:

    a. Horizontal AWG: 8 lbs (3.63 kg).

b. Vertical pullout force: 2 lbs (0.91 kg).

17. Contact Pressure: Greater than 0.22 lbs (0.22 lbs (100 grams).

18. Contact Resistance: Less than 10 milliohms.

19. Insulation Resistance: Greater than 500 megohms.

20. Current/Voltage:

    a. 140 VDC at 1.5 amps (2-7005).

    b. 140 VDC at 2 amps (STAR600V6 and 8).

21. Dielectric Withstand: 1000 VAC RMS at 60Hz minimum.

B. Basis of Design: MediaMAX Jack - Tool-less Category 6 Jack as manufactured and supplied by Suttle. Performance exceeding TIA/EIA-568-C.2 channel/link and component standards. Provides consistent, reliable, and easier wire termination. IDC with tool-less toggle connections aid in maintaining maximum Category 6 performance, providing a gas tight connection and improved cable retention.

1. Part Number: STAR6000C6T. Category 6 jack, 8-position, 8-conductor module, tool-less IDC with 8 color-coded bezels.

2. Color: Electrical ivory.

3. Color: Light almond.

4. Listed to UL and ULc.

5. Allows mounting to both SpeedStar and generic keystone wall plates.

6. Tool-less toggle eliminates individual wire punch-down and provides consistent IDC termination.

7. Unique "dual-toggle" design helps preserve wire twist during assembly.

8. Jack installs easily from rear of wall plate.

9. Complies with TIA 1096 (formerly Part 68 of FCC Rules).

10. Material: High impact, flame retardant thermoplastic, UL 94-V0 (indoor) rated.

11. Individually packaged with assorted color-coded bezels.

12. No extra parts required for wire termination.

13. No excess wire trimming required.

14. Wiring: 568A or 568B color-coded labeling for easy wire identification.

15. Insertion Life: 750 insertions.

16. Contacts: 50 micro-inch nickel with minimum 50 micro-inch of gold.

17. IDC Blocks: Tool-less toggles.

18. Conductor size: 22 to 24 gauge.

19. Contact Pressure: Greater than 0.22 lbs (100 grams).

20. Contact Resistance: Less than 10 milliohms.

21. Insulation Resistance: Greater than 500 megohms.

22. Voltage/Current: 140 VDC at 2.0 amps.

23. Dielectric Withstand: 1000 VAC RMS at 60 Hz.

2.6 FACEPLATES

A. Downward Facing Plates:

1. Basis of Design: Downward Oriented Faceplates as manufactured and supplied by Suttle. Employs jacks mounted at a 90 degree downward allowing cables to be run down, and out, at a much lower risk to damage. Smooth, shatter-resistant faceplate protects installation from collateral damage.

   a. Part Number: 2-6500. Single gang plate with 4 insert styles.

   b. Part Number: 2-6501. Single gang plate with 2-port F81 insert, connectors not included.

   c. Part Number: 2-6502. Single gang plate with 2-port SpeedStar insert, connectors not included.

   d. Part Number: 2-6503. Single gang plate with CablePass feed-through insert.

   e. Part Number: 2-6504. Single gang plate with F81/SpeedStar insert, connectors not included.

   f. Part Number: 2-6522D. Double gang plate with 3-port SpeedStar insert, connectors not included.

   g. Part Number: 2-6523D. Double gang plate with CablePass feed-through

   h. Color: Electric ivory.

   i. Color: White.

   j. Listed: UL and ULc.

   k. Accommodates:

i. F81 barrel connectors.

ii. SpeedStar connectors.

iii. CablePass feed-through.

l. New construction or replacement of existing plates.

m. Material: High impact, flame retardant thermoplastic, UL 94-V0 (indoor) rated.

n. Dimensions:

i. Single Gang (HxWxD): 5.04 x 3.13 x 1 in (128 x 80 x 25 mm).

ii. Double Gang (HxWxD): 5.04 x 5 x 1 in (128 x 127 25 mm).

B. Basis of Design: Convergence Wall Plate as manufactured and supplied by Suttle. For managing multiple cable types within a facility. Direct surface mounting on a wall or over an existing single or double gang junction box, with versions for managing connections with twisted pair wire (voice and data), coax cable or fiber cable. Ideal for managing inputs and outputs for FTTH deployments using desktop ONTs. Compatible with SpeedStar connectors.

1. Part number: CON-2216. Configured for use with a coax splitter (1x2, 1x3, 2x2, 2x3) or ground block and an external SC/APC adapter port, internal fiber management spools, and blanks for two additional SpeedStar connectors (voice or data jacks).

2. Part number: CON-2221. Configured with 6 blank openings on bottom for use with SpeedStar connectors (voice and data jacks, SC/APC fiber adapter) and fiber management spools.

3. Color: Electrical Ivory.

4. Color: White.

5. Standards Compliance:

a. Listed: UL and ULc.

6. Distribution point for any combination of cabling (Fiber, Coax, Twisted Pair).

7. Configurations with slack management for up to 6 ft (1829 mm) of 900 im, 0.063 in (1.6 mm), 0.118 in (3 mm), and 0.189 in (4.8 mm) fiber optic cable.

8. Supports fiber adapters, voice jacks, data jacks and coax splitters or ground blocks together in a compact wall plate.

9. Convenient knockouts on cover and base.

10. Designed to use SpeedStar voice and data jacks.

11. Entry hole to allow a No. 10 AWG ground wire for coax devices (when configured for coax).

12. Slotted key mounting holes to prove easy installation onto a j-box.

13. Captive 3/8 in (9 mm) hex screw to secure the cover to the base with 216-tool.

14. Fiber Adapter: SC/APC.

15. Material: High impact, flame retardant thermoplastic, UL 94-V0 (indoor) rated.

16. Dimensions (HxWxD): 5.5 x 6.5 x 1.5 in (140 x 165 x 38 mm).

C. Basis of Design: SpeedStar Single and Double Gang Smooth Faceplates: as manufactured and supplied by Suttle. For use with SpeedStar modular multimedia connectors. Each housing provides simple snap-in connector installation. Mounts over standard J-box (mounting screws included).

1. Part Number: 2-2504. 4-port faceplate, single gang, smooth finish.

2. Part Number: 2-2504M. 4-port faceplate, oversized, single gang, smooth finish.

3. Color: Electrical Ivory.

4. Color: White.

5. Listed: UL and ULc

6. Material: High impact, flame retardant thermoplastic, UL 94-V0 (indoor) rated and 22 AWG stainless steel.

a. Dimensions (HxWxD):

i. Single Gang: 4.57 x 2.81 in (116 x 71 mm).

ii. Oversized: 4.875 x 3.125 x 0.2 in (124 x 79 x 5 mm).

iii. Single Gang (Stainless): 4.5 x 2.75 x 0.29 (114 x 70 x 7 mm).

D. Basis of Design: SpeedStar Mounting Frame, 2-Port as manufactured and supplied by Suttle. Fit standard floor and wall J-Box designs and utilize standard electrical faceplates. For use with Suttle's line of rear-loading snap-in multimedia modules and colored bezels.

1. Part Number: STAR1062. 2-port mounting frame.

2. Part Number: 860A. Duplex electrical style faceplate.

3. Color: Electrical Ivory.

4. Color: White.

5. Listed: UL and ULc.

6. Fits standard NEMA boxes and electrical faceplates.

7. Material: High impact, flame retardant thermoplastic, UL 94-V0 (indoor) rated.

8. Write on label designations for easy identification.

9. Available in 2 or 4-ports.

10. Modules snap-fit from the rear.

11. Inserts provide versatile module configuration options.

E. Basis of Design: SpeedStar Barrel Connector 3GHz F81 as manufactured and supplied by Suttle.

1. For SpeedStar faceplates and housings.

2. Type F connector.

3. Frequency Range: 5 to 3000 MHz.

F. Basis of Design: SpeedStar Blank Connector Insert as manufactured and supplied by Suttle.

1. Part Number: STAR500B.

2. Color: Electrical Ivory.

3. Color: White.

4. Fits SpeedStar faceplates, wall plates, and housings.

G. Basis of Design: Blank Faceplate, Single Gang as manufactured and supplied by Suttle. Flush mount design. Fits industry-standard J boxes. Includes color-matched mounting screws.

1. Part Number: 107. Single gang blank faceplate.

2. Part Number: 108. Double gang blank faceplate.

3. Color: Electrical Ivory.

4. Color: White.

5. Standards Compliance:

a. Listed: UL and ULc.

b. Conforms to NEMA and ANSI standards.

6. Material: High impact, flame retardant thermoplastic, UL 94-V0 (indoor) rated.

H. Basis of Design: Wall Jack Assembly as manufactured and supplied by Suttle. For use with wall mounted, 8-conductor modular telephone sets. The stainless-steel cover assembly has two lugs, which mate with the corresponding keyhole slots in the telephone base plate or adapter. Includes a STAR600B Channel Six Performance Jack Module wired 568B and matching bezel. Exceeds TIA/EIA-568-B.2 specifications for Category 5e component performance.

1. Part Number: STAR630B8. 8-Position, 8-Conductor, 568B, 110 IDC Block jack module, stainless steel faceplate.

2. Listed: UL and ULc.

3. Terminates with standard 110 termination tools.

4. Dust covers for IDC terminations.

5. Wiring: 568B pinout.

6. Insertion Life: 750 insertions.

7. Housing: High impact, flame retardant thermoplastic, UL 94-V0 (indoor) rated.

8. Contacts: 50 micro-inch (0.00127 mm) hard gold plating minimum with 100 micro-inch (0.00254 mm) nickel.

9. Connection: Binding screws.

10. Contact Pressure: Greater than 0.22 lbs (100 grams).

11. Insulation Resistance: Greater than 500 megohms.

12. Contact Resistance: Less than 10 milliohms.

13. Current/voltage: Less than 140 VDC at 2 amps.

2.7 SURFACE MOUNT FACEPLATES:

A. Basis of Design: SpeedStar Barrel Connector 3GHz F81 as manufactured and supplied by Suttle.

1. For SpeedStar faceplates and housings.

2. Type F connector.

3. Frequency Range: 5 to 3000 MHz.

B. Basis of Design: SpeedStar Surface Mount Housings as manufactured and supplied by Suttle. Available in several configurations for use with Suttle's line of SpeedStar modular multimedia connectors. Snap-in connector installation with the use of versatile insert plates. Mounted with screws or double-sided adhesive pad.

1. Part Number: STAR558. 1- or 2-port surface mount housing.

a. Dimensions (H x L x W): 1.17 x 2.70 x 2.50 in (30 x 69 x 64 mm).

2. Part Number: STAR107SM. Up to 3-port surface mount housing.

   a. Dimensions (H x L x W): 1.03 x 3.25 x 2.625 in (26 x 83 x 67 mm).

3. Part Number: STAR108SM. Up to 6-port surface mount housing.

   a. Dimensions (H x L x W): 1.03 x 6.17 x 2.625 in (26 x 157 x 67 mm).

4. Part Number: STARMMB. Up to 12-port surface mount housing.

   a. Dimensions (H x L x W): 1.20 x 5.60 x 6.75 in (30 x 142 x 171 mm).

5. Color: Electrical Ivory.

6. Color: Light almond.

7. Color: White.

8. Listed: UL and ULc.

9. Material: High impact, flame retardant thermoplastic, UL 94-V0 (indoor) rated.

C. Basis of design: Wall Mount Adaptort DSL Filter as manufactured and supplied by Suttle. Manage all connectivity in one plate. Smooth faceplate jacks visibly labeled "DATA" and "VIDEO" above each port respectively allowing user to distinguish between them.

1. Part Number: 2-5001-FC-C6. 2-port faceplate, single gang, one "Data" and one "Video" labeled port. Smooth finish.

2. Color: Electrical Ivory.

3. Color: White.

4. Listed: UL and ULc.

5. Attractive one piece design.

6. Smooth, non-textured surface and rounded corners with painted head screws to match the faceplate.

7. Data jacks rated up to CAT6.

8. Connections to jacks are 110 IDC.

9. F connector 3GHz SCTE compliant.

10. Data Inputs: 8 conductor, CAT6.

11. Data Outputs: 110 IDC.

12. Video Inputs and Outputs: F81 barrel connectors.

    a. Standards: SCTE 02 compliant.

    b. Materials: Nickel plated free spinning brass.

    c. Frequency: 5-3000 MHz.

13. Wiring Data: TS68A.

14. Dimensions (LxW): 4.57 x 2.81 in (116 x 71 mm).

D. Basis of Design: Surface Mount Connector Kits as manufactured and supplied by Suttle. Combine a housing with one or two voice grade, data, voice/data or gel filled, connectors with bezels. Configurable for SpeedStar modular connectors. Attach using screws or double-sided adhesive pad. Includes snap-in 1 or 2 port insert plates for a custom installation.

1. Part Number: STAR558-G1-52 Kit. 1-port faceplate with one gel filled STAR600V6-RCB voice grade connector. Electrical ivory.

2. Part Number: STAR558-G1-85 Kit. 1-port faceplate with one gel filled STAR600V6-RCB voice grade connector. White.

3. Part Number: STAR558-G2-52 Kit. 2-port faceplate with two gel filled STAR600V6-RCB voice grade connectors. Electrical ivory

4. Part Number: STAR558-G2-85 Kit. 2-port faceplate with two gel filled STAR600V6-RCB voce grade connectors. White.

5. Part Number: STAR558-V1-52 Kit. 1-port faceplate with one 2-7005 voice grade connector. Electrical ivory.

6. Part Number: STAR558-V1-85 Kit. 1-port faceplate with one 2-7005 voice grade connector. White.

7. Part Number: STAR558-V2-52 Kit. 2-port faceplate with two 2-7005 voice grade connectors. Electrical ivory.

8. Part Number: STAR558-V2-85 Kit. 2-port faceplate with two 2-7005 voice grade connectors. White.

9. Part Number: STAR558-D1-52 Kit. 1-port faceplate with one STAR6000C6T data connector. Electrical ivory.

10. Part Number: STAR558-D1-85 Kit. 1-port faceplate with one STAR6000C6T data connector. White.

11. Part Number: STAR558-D2-52 Kit. 2-port faceplate with two STAR6000C6T data connectors. Electrical ivory.

12. Part Number: STAR558-D2-85 Kit. 2-port faceplate with two STAR6000C6T data connectors. White.

13. Part Number: STAR558-DV-52 Kit. 2-port faceplate with one STAR6000C6T data and one 2-7005 voice grade connector. Electrical ivory.

14. Part Number: STAR558-DV-85 Kit. 2-port faceplate with one STAR6000C6T data and one 2-7005 voice grade connector. White.

2.8 ACCESSORLES

A. Couplers and Adapters:

1. Basis of Design: 2-line Split and Bridge Inline Adapter as manufactured and supplied by Suttle. Four-conductor to 2/2/4-conductor, designed for connecting two items to an existing 2-line modular jack separating each line out to the center pair on its own jack while allowing a third item access to both lines.

   a. Part Number: 173.

   b. Labeling: L1 / L2 / L1 and L2.

2. Basis of Design: Inline T Adapters - 267 Series as manufactured and supplied by Suttle. Connect two telephones or associated equipment items to an existing modular jack. Allow for quick connection of two devices at a single jack location without rewiring.

   a. Part Number: 267A4. 2 for 1 inline modular adapter, 4-conductor to 4/4-conductor.

   b. Part Number: 267A. 2 for 1 inline modular adapter, 4-conductor to 6/6-conductor.

   c. Part Number: 267B. Inline modular adapter, single 4-contact jack wired for termination of 2 lines.

   d. Part Number: 267C. Inline modular adapter, Voice labeled: PHONE, Data labeled: MODEM.

   e. Part Number: 267E. 2 for 1 inline modular adapter, 6-conductor to 6/6-conductor.

   f. Listed: UL and ULc.

   g. Allows multiple connections from a single modular jack.

   h. Material: High impact, flame retardant thermoplastic, UL 94-V0 (indoor) rated.

   i. Contact Pressure: Greater than 0.22 lbs (100 grams).

   j. Insulation Resistance: Greater than 500 megaohms.

   k. Contact Resistance: Less than 10 milliohms.

   l. Current/Voltage: 140 VDC at 2 Amps.

3. Basis of Design: 4-line Split Inline Adapter as manufactured and supplied by Suttle. Eight-conductor to 4/4-conductor, splits eight conductor premise wiring into two, four-conductor modular outputs.

   a. Part Number: 400E.

   b. Input: RJ61.

   c. Output: RJ14.

   d. Labeling: PAIR 1 and 2 / PAIR 3 and 4.

4. Basis of Design: 2 for 1, 8-conductor Inline Adapter as manufactured and supplied by Suttle. Eight-conductor plug to 8/8-conductor jacks, designed for connecting two items to an existing modular jack.

   a. Part Number: 400S-50.

   b. Input: RJ61.

   c. Output: RJ61.

5. Basis of Design: 4-line Split Coupling Adapter as manufactured and supplied by Suttle. Four-line split coupling modular adapter, 8-conductor to 4/4-conductor, designed for splitting 4-lines on an 8-position jack into 2-lines on two 6-position jacks.

   a. Part Number: 450A.

   b. 4 voice lines.

   c. Input: RJ61 jack.

   d. Output: RJ14 jack.

   e. Labeling: PAIR 1 and 2 / PAIR 3 and 4.

6. Basis of Design: Telephony Couplersas manufactured and supplied by Suttle.An in-line device for connecting and/or extending two modular plug-ended line cords. Extends modular circuits without the hassle and expense of hardwired connecting blocks.

   a. Part Number: 159MC-4. 4-conductor coupler, reverse wiring, ivory housing.

   b. Part Number: 159MC-6. 6-conductor coupler, reverse wiring, ivory housing.

   c. Part Number: 159MC-8A. 8-conductor coupler, straight wiring, gray housing.

   d. Part Number: 159MC-8B. 8-conductor coupler, reverse wiring, gray housing.

   e. Listed: UL and ULc.

f. Reverse or straight through wiring.

g. Material: High impact, flame retardant thermoplastic, UL 94-V0 (indoor) rated.

h. Contacts: Spring tempered phosphor-bronze 0.018-inch (0.46 mm) diameter 50 micro-inch (0.00127 mm) hard gold plating minimum 100 micro-inch (0.00254 mm) underplate with sulfamate nickel.

i. Contact Pressure: 0.22 lbs (0.22 lbs (100 grams) minimum.

j. Insulation Resistance: 500 megaohms.

k. Contact Resistance: 10 milliohms maximum.

l. Voltage/Current: 140 VDC at 2 amps.

B. Patch Cords:

1. Basis of Design: CAT6 Patch Cords as manufactured and supplied by Suttle. Suttle Category 6 rated patch cords offer the higher performance specifications needed for Gigabit Ethernet (1000-Base-T) applications. They feature connectors with improved strain relief and anti-snag latches and are available in a variety of lengths and colors.

a. Part Number: STAR661-04. CAT6, 200 Mhz Patch Cord; 4 ft (1.2 m) length.

b. Part Number: STAR661-08. CAT6, 200 Mhz Patch Cord; 4 ft (1.2 m) length.

c. Part Number: STAR661-12. CAT6, 200 Mhz Patch Cord; 4 ft (1.2 m) length.

d. Color: Red.

e. Color: Yellow.

f. Color: Blue.

g. Enhanced strain relief at connectors.

h. Anti-snag latches.

i. Supports broadband video and high-speed ATM applications.

j. Backwards compatible with Cat 5 legacy products.

k. Meets Cat 6 transmission requirements in EIA/TIA 568-C standard.

l. Mechanical, electrical and clearance specifications meet FCC Rules and Regulations, Part 68 Subpart F.

m. Listed: UL and ULc.

n. Dielectric Withstand: Greater than 1000 VAC RMS at 60 Hz.

o. Insulation Resistance: Greater than 500 megaohms.

p. Contact Resistance: Less than 20 millohms.

q. Contact Materials: 50 micro-inch (0.00127 mm) gold over 100 micro-inch (0.00254 mm) nickel.

r. Current Rating: 1.5 A at 68 degrees F (20 Degrees C).

i. Per IEC Publication 512-3, Test 5b.

s. Conductors: 4 twisted pair, 24 AWG stranded copper.

t. Insulation: Flame retardant polyethylene.

u. Jacket: PVC.

v. Plastic Plug: High impact, flame retardant thermoplastic, UL 94-V0 (indoor) rated.

2.9 CONTRACTOR PANEL KITS

A. Basis or Design: MediaMax Contractor Kits as manufactured and supplied by Suttle.

1. Standards Compliance: UL listed.

2. Plastic Enclosures: CAT6

B. Smart: CAT6 and COAX.

1. Kit Number: MXE-15FK-TC6. 15-inch () panel

a. Panel: MXE-15P-1G2.

b. Hinged Vented Cover: MXE-15C-1G2.

c. Mounting Kit: MXE-ACC-1. CPE. 1 equipment shelf, 2 equipment brackets, 2 cable spools, 2 tie brackets, 4 cable ties, 12 screws

d. Data:

i. STAR6000C6T: CAT6 Tool-less data jack, 1 Gig, 250MHz bandwidth, 8-position, 8-conductor, 568A/B, tool-less IDC, includes colored bezels. Quantity of ___.

ii. SAM-SP8: 8 - Port patch module

e. Video:

i. SAM-RFH4: 1 x 4 COAX RF splitter module, 3GHz

ii. STAR500F-C-85: F81 COAX connector, 3GHz. Quantity of ____.

f. Faceplates:

i. FD-12-SCR: 2 Port faceplates, screw-on. Quantity of 4.

2.10 METAL ENCLOSURES: CAT6

A. Smart: CAT6 and COAX.

1. Kit Number: SAE-28NMK-TC6

a. Panel: SAE-28.

b. Metal Door Cover: SADC-28.

c. Mounting Kit: SAE-ACC-1. CPE. 1 equipment shelf, 30" hook & loop strap, 2 cable spools, 2 tie brackets, 4 cable ties, 12 screws

d. Data:

i. STAR6000C6T: CAT6 Tool-less data jack, 1 Gig, 250MHz bandwidth, 8-position, 8-conductor, 568A/B, tool-less IDC, includes colored bezels. Quantity of ____.

ii. SAM-SP8: 8 - Port patch module

e. Video:

i. SAM-RFH8: 1 x 8 COAX RF splitter module, 3GHz

ii. STAR500F-C-85: F81 COAX connector, 3GHz. Quantity of ____

f. Faceplates:

i. FD-12-SCR: 2 Port faceplate, screw-on. Quantity of ____.

2.11 METAL ENCLOSURES: CAT6A

A. Smart: CAT6A and COAX.

1. Kit Number: SAE-28NMK-TC6A

a. Panel: SAE-28.

b. Metal Door Cover: SADC-28.

c. Mounting Kit: SAE-ACC-1. CPE. 1 equipment shelf, 30" hook & loop strap, 2 cable spools, 2 tie brackets, 4 cable ties, 12 screws

d. Data:

i. STAR6APDJ: CAT6A 10 Gig data jack, 10-Gig, 500MHz bandwidth, 8-position, 8-conductor, 568A/B wiring, standard 110 IDC, includes colored bezels. Quantity of ____.

ii. SAM-SP8: 8 - Port patch module

e. Video:

i. SAM-RFH8: 1 x 8 COAX RF splitter module, 3GHz

ii. STAR500F-C-85: F81 COAX connector, 3GHz. Quantity of ____

f. Faceplates:

i. FD-12-SNO: 2 Port faceplates, snap-on. Quantity of ____.

PART 3 EXECUTION

3.1 EXAMINATION

A. Do not begin installation until substrates have been properly constructed and prepared.

1. Verify structural framing, enclosures, weld plates, blocking, and size and location of pockets.

a. If substrate preparation is the responsibility of another installer, notify Owner's Representative in writing of unsatisfactory preparation before proceeding.

3.2 PREPARATION

A. Clean surfaces thoroughly prior to installation.

a. Prepare surfaces using the methods recommended by the manufacturer for achieving the best result for the substrate under the project conditions.

3.3 INSTALLATION

A. Install in accordance with manufacturer's instructions and approved submittals. Test for proper operation and adjust until satisfactory results are obtained.

B. The Work shall comply with applicable safety rules and regulations including OSHA. The Work shall comply with the requirements of the National Electrical Safety Code (NESC) and the NEC except where local codes or regulations are more stringent, in which case the local codes or regulations shall govern.

a. The Work shall comply with the requirements and recommendations of the product manufacturers. Where questions arise regarding which requirements and recommendations apply, the more stringent shall prevail.

b. Replace or repair to original (or better) condition any existing structures, materials, equipment, etc. inadvertently demolished or damaged by the Contractor during construction at no additional cost to the Owner.

3.4 FIELD QUALITY CONTROL

A. Field Inspection: Coordinate field inspection in accordance with appropriate sections in Division 01.

B. Manufacturer's Services: Coordinate manufacturer's services in accordance with appropriate sections in Division 01.

3.5 CLEANING AND PROTECTION

A. Upon completion of installation, remove surplus materials, rubbish, tools and equipment.

B. Clean products in accordance with the manufacturer's recommendations.

a. Protect installed products until completion of project.

b. Touch-up, repair or replace damaged products before Substantial Completion.

END OF SECTION

PART 1 – GENERAL

1.1 GENERAL REQUIREMENTS AND SCOPE

A. Furnish and install a completely new GPS or NTP Synchronized Clock system using the iSOLVED **Velocity 850 Time Clock** System. All Bids shall be based on product specification as contained herein.

B. Bidders wishing to submit alternative equipment must supply alternative specification documents which contain technical documentation to prove it's a technical and functional equivalent.

C. Final Approval of any alternative system shall be determined at the time of job completion. Failure to provide the "precise functional equivalent" shall result in the removal of the alternative system at the contractor's expense.

1.2 SUMMARY

A. GPS, NTP Wireless Transmission System

1. Transmitter with GPS Receiver or NTP (Network Time Protocol).

2. GPRS cellular

B. Wireless Receiving Devices

1. Digital Clocks – AC Powered

1.3 RELATED DIVISIONS AND SECTIONS

A. Division 26- Electrical 120V grounded outlet required for Transmitter, AC powered Digital Display Clocks.

1.4 REFERENCES

A. iSOLVE Operations Manual and Associated drawings.

B. National Fire Protection Agency (NFPA) – 70, National Electric Code 2005

1.5 DEFINITIONS

A. **GPS: Global Positioning System**, a worldwide system that employs 24 orbiting satellites in an integrated network to determine geographic location anywhere in the world, and which employs and transmits atomic time (UTC).

B. **NTP: Network Time Protocol,** an Internet standard protocol (built on top of TCP/IP) that assures accurate synchronization to the millisecond of computer clock times in a network of computers. Based on UTC, NTP synchronizes client workstation clocks to the U.S. Naval Observatory Master Clocks in Washington, DC and Colorado Springs CO. Running as a continuous background client program on a computer, NTP sends periodic time requests to servers, obtaining server time stamps and using them to adjust computers clocks.

1.6 SUBMITTALS

A. **System Product Data:** Submit all data for each component, describing its operational and physical characteristics along with the method of installation. Submit a brochure showing all available colors and dimensions of clocks.

B. **Operating License:** The system must operate in accordance with a "Radio Station Authorization" form FCC 601 granted by the Federal Communication Commission (FCC). Submit evidence of application for operating license prior to installing equipment. Furnish the license, or if the license has not been received, a copy of the application for the license, to the Owner prior to operating the equipment. Upon receipt of License, deliver original license to Owner.

C. **Manufacturer's Instructions:** Submit complete installation, set-up and maintenance instructions.

D. **Schematic** indicating the location of the transmitter(s) and all clocks must be submitted by owner prior to installation.

1.7 QUALITY ASSURANCE

A. Qualifications:

1. **Manufacturer:** Company specializing in manufacturing of timekeeping products with a minimum of 10 continuous years of documented experience.

2. **Installer:** Company with documented experience in the installation of commercial timekeeping systems.

B. **Permits:** Obtain FCC license for Transmitter authorization

1.8 SUBSTITUTIONS

A. Proposed substitutions, if considered, shall be manufactured of equivalent materials and meet or exceed all detailed operational features of the specified requirements of this section. Submission of an alternative shall contain an original draft point by point comparison of the submitted product relative to the requirements of this specification.

B. Any proposed substitutions must be identified not less than 10 days prior to bid date.

C. Other systems that are unlicensed or have the FCC license in the name of someone other than the building owner will not be accepted

D. Final Approval of any alternative system shall be determined at the time of job completion. Failure to provide the "precise functional equivalent" shall result in the removal of the alternative system at the contractor's expense.

1.9 REGULATORY REQUIREMENTS

A. Equipment and components furnished shall be manufacturer's latest model.

B. Master Transmitter and receiver shall comply with Part 90 of FCC rules, as follows:

C. This device must not cause harmful interference and must accept interference received, including interference that may result in undesirable operation.

1. Transmitter frequency shall be governed by FCC Part 90.35.

2. Transmitter output power shall be governed by FCC Parts 90 and 74.

D. System shall be installed in compliance with local and state authorities having jurisdiction.

C. The end user must acquire an operating license, or "Radio Station Authorization" that will be granted by the FCC. This permits the end user to legally operate this Wireless system.

1.10 DELIVERY, STORAGE AND HANDLING

A. Deliver all components to the site in the manufacturer's original packaging. Packaging shall contain manufacturer's name and address, product identification number, and other related information.

B. Store equipment in finished building, unopened containers until ready for installation.

1.11 PROJECT FIELD CONDITIONS

A. Clocks shall not be installed until painting and other finish work in each room is complete.

PART 2 – PRODUCTS

2.1 ACCEPTABLE MANUFACTURER

iSolve
324 South State Street, Suite 500
Salt Lake City, UT 84111
Sales: 1-800-733-8839
Support: 1-800-697-7010
Website: **https://www.isolvedtime.com/**

2.2 SYSTEM DESCRIPTION AND OPERATION

A. The iSOLVE timekeeping system consists of a Transmitter located on the inside the building, a NTP receiver box connected via an RJ45 Ethernet cable from an in-house computer network to the transmitter, along with clocks, and accessories. Once operational, the transmitter shall keep all system clocks synchronized to the second all day, each day, every day.

B. System shall synchronize all clocks to each other. System shall utilize NTP technology to provide atomic time to components.

C. The system has an internal clock that will continuously be updated by the NTP. If a NTP failure were to occur, the clocks would continue to be synchronized to the internal clock and would not deviate from one another. Once NTP time is restored, all clocks would once again be synchronized.

D. The system has a failsafe design so that if a power interruption were to occur, the clocks will continue to operate. Upon the restoration of power, the transmitter will once again communicate with the clocks and normal operation will resume.

E. System shall be 100% programmable from the front operation panel with lights that indicate power status, and NTP reception.

F. System programming for Time Zone, Frequency, and 12- or 24-hour operation must be programmable from the front of transmitter to avoid system movement.

2.3 EQUIPMENT

A. **Time Zones**: Display and programming must allow for the selection and display of Time zones for all North America: Atlantic, Eastern, Central, Mountain, Pacific, Alaska and Hawaii. It must also allow for all international time zone options.

B. **12hr or 24hr Operation:** System must allow for programming of desired method of operation on the face of the transmitter.

C. **Programming**: All programming of operating features must occur on the front of the Transmitter and all changes must be able to be viewed on the digital display as the changes are being made.

D. **Transmission Range**: Up to 2 miles radius (transmitter power dependent)

E. **Operating Range**: 32 degrees F to 158 degrees F (0 degrees C. to 70 degrees C.)

F. **Radio Technology**: Narrowband FM, 12.5 KHz bandwidth

G. **Antenna:** Shall be used for indoor applications and attached to the rear of the transmitter. No external antenna required.

H. **Power Supply**: (included with transmitter)

1. Input: 120-volt AC 50/60 Hz

2. Output: 12-volt DC, 3 Amps

I. Surge Protector/Battery Backup:

1. Input: 120-volt AC 60 Hz +/-1 Hz.

2. Output: 120-volt AC, 550VA, 300 watts

3. Surge Energy Rating: 365 joules

J. **Clock features**: Clocks shall automatically update from the transmitter 6 times a day. 2:00, 6:00, 10:00 AM/PM. Use manufacturers provided "D" cell batteries or AC power adapter.

1. Additional finishes and colors available.

2. Clocks will keep operating in synchronized mode if NTP signal is lost due to NTP failure. Once signal is re-acquired, clocks will resume NTP time synchronization.

3. Clocks will keep operating as quartz-based clocks if there is a transmitter malfunction.

a. **Digital Clocks** must be able to receive synchronized time signals from the Main Transmitte.

2.4 SYSTEM OPERATION AND STARTUP

A. **Transmission System** shall receive Atomic Time information every second from the NTP receiver connected to transmitter. Upon power up and receipt of NTP time, the Transmitter will then transmit NTP synchronized time to all receiving devices programmed to the system frequency. The transmitter and all receiving devices will monitor receipt of NTP time and remain synchronized.

B. Wireless Master Transmitter Operation

1. When power is first applied to the master transmitter, the power light will flash and it will search for a valid NTP signal and upon receipt, it will set the internal clock of the transmitter. The transmitter will update its internal clock whenever it receives a valid time signal from the NTP receiver. It shall transmit NTP time 3 times per minute to all receiving devices.

K. Digital Clock Operation

1. Connect the DC adapter (supplied with each digital clock) to the appropriate power source. The built-in receiver will search for a signal from the transmitter by scanning all frequencies. Upon receipt of signal confirmation, the digital clock will store the frequency in its non-volatile memory and synchronize to the exact time of transmitter.

PART 3 - EXECUTION

3.1 EXAMINATION

A. Verify that construction is complete in spaces to receive equipment and that rooms are clean and dry.

B. Verify that all 120-volt electrical outlets for the AC powered clocks are located at the exact installation point and the outlet is operational and properly grounded.

3.2 SYSTEM INSTALLATION

A. Install in accordance with manufacturer's installation manual furnished with system.

3.3 CLEANING

A. Prior to final acceptance, clean exposed surfaces of all system components, using cleaning methods recommended by the manufacturer. Remove any labels from the faces of the clocks.

3.4 MANUFACTURER SERVICES/DEMONSTRATION

A. Provide technical assistance to owner's representatives on functioning of the system and ongoing operation requirements. Use operations manual or call 1-888-559-5565.

3.5 FIELD INSPECTION

A. Prior to final acceptance, inspect entire system to ensure proper functioning and synchronization of components and replace any parts found defective. Contact **iSolved** at **1-800-697-7010.**

END OF SECTION

PART 1 - GENERAL

1.1 SUMMARY

A. Section Includes:

1. Sleeves for raceways and cables
2. Sleeve seals
3. Grout
4. Common electronic safety and security installation requirements

1.2 SUBMITTALS

A. Product Data:
For sleeve seals

PART 2 - PRODUCTS

2.1 SLEEVES FOR RACEWAYS AND CABLES

A. Steel Pipe Sleeves:
ASTM A 53/A 53M, Type E, Grade B, Schedule 40, galvanized steel, plain ends

B. Cast Iron Pipe Sleeves:
Cast or fabricated "wall pipe," equivalent to ductile-iron pressure pipe, with plain ends and integral water stop, unless otherwise indicated.

2.2 SLEEVE SEALS

A. Description:
Modular sealing device, designed for field assembly, to fill annular space between sleeve and raceway or cable.

1. Basis of Design Product:
Subject to compliance with requirements, provide or/a comparable product by one of the following:

a. Advance Products & Systems, Inc.

b. Calpico, Inc.

c. Metraflex Co.

d. Pipeline Seal and Insulator, Inc.

2. Sealing Elements:
EPDM interlocking links shaped to fit surface of cable or conduit. Include type and number required for material and size of raceway or cable.

3. Pressure Plates:
Stainless steel. Include two for each sealing element.

4. Connecting Bolts and Nuts:
Stainless steel of length required to secure pressure plates to sealing elements. Include one for each sealing element.

2.3 GROUT

A. Nonmetallic, Shrinkage Resistant Grout:
ASTM C 1107, factory packaged, nonmetallic aggregate grout, noncorrosive, non-staining, mixed with water to consistency suitable for application and a 30-minute working time.

PART 3 - EXECUTION

3.1 COMMON REQUIREMENTS FOR ELECTRONIC SAFETY AND SECURITY INSTALLATION

A. Comply with NECA 1

B. Measure indicated mounting heights to bottom of unit for suspended items and to center of unit for wall mounting items.

C. Headroom Maintenance:
If mounting heights or other location criteria are not indicated, arrange and install components and equipment to provide maximum possible headroom consistent with these requirements.

D. Equipment:
Install to facilitate service, maintenance, and repair or replacement of components of both electronic safety and security equipment and other nearby installations. Connect in such a way as to facilitate future disconnecting with minimum interference with other items in the vicinity.

E. Right of Way:
Give to piping systems installed at a required slope.

3.2 SLEEVE INSTALLATION FOR ELECTRONIC SAFETY AND SECURITY PENETRATIONS

A. Electronic safety and security penetrations occur when raceways, pathways, cables, wireways, or cable trays penetrate concrete slabs, concrete or masonry walls, or fire-rated floor and wall assemblies.

B. Concrete Slabs and Walls:

Install sleeves for penetrations unless core drilled holes or formed openings are used. Install sleeves during erection of slabs and walls.

C. Use pipe sleeves unless penetration arrangement requires rectangular sleeved opening.

D. Fire Rated Assemblies:
Install sleeves for penetrations of fire-rated floor and wall assemblies unless openings compatible with firestop system used are fabricated during construction of floor or wall.

E. Cut sleeves to length for mounting flush with both surfaces of walls.

F. Extend sleeves installed in floors 2 inches (50 mm) above finished floor level.

G. Size pipe sleeves to provide l/4-inch (6.4-mm) annular clear space between sleeve and raceway or cable, unless indicated otherwise.

H. Seal space outside of sleeves with grout for penetrations of concrete and masonry

1. Promptly pack grout solidly between sleeve and wall so no voids remain. Tool exposed surfaces smooth; protect grout while curing.

I. Interior Penetrations of Non-Fire Rated Walls and Floors:
Seal annular space between sleeve and raceway or cable, using joint sealant appropriate for size, depth, and location of joint. Comply with requirements in Division 07 Section "Joint Sealants."

J. Fire Rated Assembly Penetrations:
Maintain indicated fire rating of walls, partitions, ceilings, and floors at raceway and cable penetrations. Install sleeves and seal raceway and cable penetration sleeves with fire stop materials. Comply with requirements in Division 07 Section "Penetration Fire Stopping."

K. Roof Penetration Sleeves:
Seal penetration of individual raceways and cables with flexible boot-type flashing units applied in coordination with roofing work.

L. Aboveground, Exterior Wall Penetrations:
Seal penetrations using steel pipe sleeves and mechanical sleeve seals. Select sleeve size to allow for l-inch (25-mm) annular clear space between pipe and sleeve for installing mechanical sleeve seals.

3.3 SLEEVE-SEAL INSTALLATION

A. Install to seal exterior wall penetrations.

B. Use type and number of sealing elements recommended by manufacturer for raceway or cable material and size. Position raceway or cable in center of sleeve. Assemble mechanical sleeve seals and install in annular space between raceway or cable and sleeve. Tighten bolts against pressure plates that cause sealing elements to expand and make watertight seal.

3.4 FIRE STOPPING

A. Apply fire stopping to penetrations of fire rated floor and wall assemblies for electronic safety and security installations to restore original fire-resistance rating of assembly. Fire stopping materials and installation requirements are specified in Division 07 Section "Penetration Fire Stopping."

END OF SECTION

PART 1 - GENERAL

1.1 SUMMARY

A. Section Includes:

1. Low-voltage control cabling.
2. Control circuit conductors.
3. Fire alarm wire and cable.
4. Identification products.

1.2 DEFINITIONS

A. BICSI: Building Industry Consulting Service International

B. EMI: Electromagnetic interference

C. IDC: Insulation displacement connector

D. RCDD: Registered Communications Distribution Designer

E. NRTL: Nationally Recognized Testing Laboratory

1.3 SUBMITTALS

A. Product Data: For each type of product indicated

B. Shop Drawings:
Cable tray layout, showing cable tray route to scale, with relationship between the tray and adjacent structural, electrical, and mechanical elements.

C. Qualification Data: For qualified layout technician, installation supervisor, and field inspector

D. Source quality control reports

E. Field quality control reports

F. Operation and maintenance data

1.4 QUALITY ASSURANCE

A. Testing Agency Qualifications: An NRTL

1. Testing Agency's Field Supervisor: Currently certified by BICSI as an RCDD to supervise on-site testing.

B. Surface Burning Characteristics:

As determined by testing identical products according to ASTM E 84 by a qualified testing agency. Identify products with appropriate markings of applicable testing agency.

1. Flame-Spread Index: 25 or less

2. Smoke-Developed Index: 50 or less

1.5 PROJECT CONDITIONS

A. Do not install conductors and cables that are wet, moisture damaged, or mold damaged.

1. Indications that wire and cables are wet or moisture damaged include, but are not limited to, discoloration and sagging of factory packing materials.

PART 2 - PRODUCTS

2.1 PATHWAYS

A. Cable Trays:

1. Manufacturers:
Subject to compliance with requirements, provide products by one of the following available manufacturers offering products that may be incorporated into the Work include, but are not limited to, the following:

a. Allied Tube & Conduit; a business unit of Tyco Electrical & Metal Products

b. Cablofil

c. Cooper B-Line, Inc.

d. GS Metals Corp.

e. Snaketray; Cable Management Solutions, Inc.

2. Cable Tray Materials:
Metal, suitable for indoors, and protected against corrosion by hot dip galvanizing, complying with ASTM A 123/A 123M Grade 0.55, not less than 0.002165 inch (0.055 mm) thick.

a. Basket Cable Trays: 6 inches (150 mm) wide and 2 inches (50 mm) deep. Wire mesh spacing shall not exceed 2 by 4 inches (50 by 100 mm).

B. Conduit and Boxes: Comply with requirements in Division 26 Section "Raceway and Boxes for Electrical Systems."

1. Outlet boxes shall be no smaller than 2 inches (50 mm) wide, 3 inches (75 mm) high, and 2-l/2 inches (64 mm) deep.

2.2 BACKBOARDS

A. Backboards:
Plywood, fire retardant treated, 3/4 by 48 by 96 inches (19 by 1220 by 2440 mm). Comply with requirements for plywood backing panels in Division 06 Section "Rough Carpentry".

2.3 FIRE ALARM WIRE AND CABLE

A. Manufacturers:
Subject to compliance with requirements, provide products by one of the following available manufacturers offering products that may be incorporated into the Work include, but are not limited to, the following:

1. Comtran Corporation
2. Draka Cableteq USA
3. Genesis Cable Products; Honeywell International, Inc.
4. Rockbestos-Suprenant Cable Corp.
5. West Penn Wire; a brand of Belden Inc.

B. General Wire and Cable Requirements: NRTL listed and labeled as complying with NFPA 70, Article 760.

C. Signaling Line Circuits:
Twisted, shielded pair, not less than No. 18 AWG size as recommended by system manufacturer.

1. Circuit Integrity Cable:
Twisted shielded pair, NFPA 70, Article 760, Classification CI, for power limited fire alarm signal service Type FPL. NRTL listed and labeled as complying with UL 1424 and UL 2196 for a 2-hour rating.

D. Non-Power Limited Circuits: Solid copper conductors with 600-V rated, 75°C, color-coded insulation.

1. Low-Voltage Circuits: No. 16 AWG, minimum
2. Line-Voltage Circuits: No. 12 AWG, minimum
3. Multiconductor Armored Cable: NFPA 70, Type MC, copper conductors, Type TFN/THHN conductor insulation, copper drain wire, copper armor with outer jacket with red identifier stripe, NTRL listed for fire alarm and cable tray installation, plenum rated, and complying with requirements in UL 2196 for a 2- hour rating.

2.4 IDENTIFICATION PRODUCTS

A. Manufacturers:

Subject to compliance with requirements, provide products by one of the following available manufacturers offering products that may be incorporated into the Work include, but are not limited to, the following:

1. Brady Corporation
2. Hellermann Tyton
3. Kroy LLC
4. PANDUIT CORP.

B. Comply with UL 969 for a system of labeling materials, including label stocks, laminating adhesives, and inks used by label printers.

C. Comply with requirements in Division 26 Section "Identification for Electrical Systems."

2.5 SOURCE QUALITY CONTROL

A. Testing Agency: Engage a qualified testing agency to evaluate cables.

B. Cable will be considered defective if it does not pass tests and inspections.

C. Prepare test and inspection reports.

PART 3 - EXECUTION

3.1 INSTALLATION OF PATHWAYS

A. Cable Trays: Comply with NEMA VE 2 and TIA-569-B

B. Comply with requirements in Division 26 Section "Raceway and Boxes for Electrical Systems." for installation of conduits and wireways.

C. Install manufactured conduit sweeps and long-radius elbows whenever possible.

D. Pathway Installation in Equipment Rooms:

1. Position conduit ends next to a corner on backboard where a single piece of plywood is installed or in the corner of room where multiple sheets of plywood are installed around perimeter walls of room.
2. Install cable trays to route cables if conduits cannot be located in these positions.
3. Secure conduits to backboard when entering room from overhead.
4. Extend conduits 3 inches (75 mm) above finished floor.
5. Install metal conduits with grounding bushings and connect with grounding conductor to grounding system.

E. Backboards:
Install backboards with 96-inch (2440-mm) dimension vertical. Butt adjacent sheets tightly and form smooth gap-free corners and joints.

3.2 WIRING METHOD

A. Install wiring in metal raceways and wire ways. Conceal race way except in unfinished spaces and as shown. Smallest conduit size shall be 3/4 inch (21 mm). Control and data transmission wiring shall not share conduit with other building wiring systems.

B. Wiring within Enclosures:
Bundle, lace, and train conductors to terminal points. Use lacing bars and distribution spools. Separate power limited and non-power limited conductors as recommended in writing by manufacturer. Install conductors parallel with or at right angles to sides and back of enclosure. Connect conductors that are terminated, spliced, or interrupted in any enclosure associated with intrusion system to terminal blocks. Mark each terminal according to system's wiring diagrams. Make all connections with approved crimp-on terminal spade lugs, pressure-type terminal blocks, or plug connectors.

3.3 FIRE ALARM WIRING INSTALLATION

A. Comply with NECA 1 and NFPA 72.

B. Wiring Method:
Install wiring in metal raceway according to Division 26 Section "Raceway and Boxes for Electrical Systems."

1. Install plenum cable in environmental air spaces, including plenum ceilings.

2. Fire alarm circuits and equipment control wiring associated with the fire alarm system shall be installed in a dedicated raceway system. This system shall not be used for any other wire or cable.

C. Wiring Method:

1. Cables and raceways used for fire alarm circuits, and equipment control wiring associated with the fire alarm system, may not contain any other wire or cable.

2. Fire Rated Cables: Use of 2-hour, fire-rated fire alarm cables, NFPA 70, Types MI and CI, is permitted.

3. Signaling Line Circuits: Power limited fire alarm cables shall not be installed in the same cable or raceway as signaling line circuits.

D. Wiring within Enclosures:

Separate power limited and non-power limited conductors as recommended by manufacturer. Install conductors parallel with or at right angles to sides and back of the enclosure. Bundle, lace, and train conductors to terminal points with no excess. Connect conductors that are terminated, spliced, or interrupted in any enclosure associated with the fire alarm system to terminal blocks. Mark each terminal according to the system's wiring diagrams. Make all connections with approved crimp-on terminal spade lugs, pressure-type terminal blocks, or plug connectors.

E. Cable Taps:
Use numbered terminal strips in junction, pull, and outlet boxes, cabinets, or equipment enclosures where circuit connections are made.

F. Color Coding:
Color code fire alarm conductors differently from the normal building power wiring. Use one color code for alarm circuit wiring and another for supervisory circuits. Color code audible alarm indicating circuits differently from alarm initiating circuits. Use different colors for visible alarm indicating devices. Paint fire alarm system junction boxes and covers red.

G. Risers:
Install at least two vertical cable risers to serve the fire alarm system. Separate risers near each other with a minimum one hour rated wall, so the loss of one riser does not prevent the receipt or transmission of signals from other floors or zones.

H. Wiring to Remote Alarm Transmitting Device:
l-inch (25-mm) conduit between the fire alarm control panel and the transmitter. Install number of conductors and electrical supervision for connecting wiring as needed to suit monitoring function.

3.4 POWER AND CONTROL CIRCUIT CONDUCTORS

A. 120-V Power Wiring:
Install according to Division 26 Section "Low-Voltage Electrical Power Conductors and Cables" unless otherwise indicated.

B. Minimum Conductor Sizes:

1. Class I remote-control and signal circuits, No. 14 AWG.

2. Class 21ow-energy, remote-control and signal circuits, No. 16 AWG.

3. Class 31ow-energy, remote-control, alarm and signal circuits, No. 12 AWG.

3.5 CONNECTIONS

A. Comply with requirements in Division 28 Section "Digital Addressable Fire Alarm System, Zoned (DC Loop) Fire-Alarm System" for connecting, terminating, and identifying wires and cables.

3.6 FIRE STOPPING

A. Comply with requirements in Division 07 Section "Penetration Fire Stopping."

B. Comply with TIA-569-B, "Fire Stopping" Annex A

C. Comply with BICSI TDMM, "Fire Stopping Systems" Article.

3.7 GROUNDING

A. For communications wiring, comply with ANSI-J-STD-607-A and with BICSI TDMM, "Grounding, Bonding, and Electrical Protection" Chapter.

B. For low-voltage wiring and cabling, comply with requirements in Division 26 Section "Grounding and Bonding for Electrical Systems."

3.8 IDENTIFICATION

A. Identify system components, wiring, and cabling complying with TIA/EIA-606-A. Comply with requirements for identification specified in Division 26 Section "Identification for Electrical Systems."

3.9 FIELD QUALITY CONTROL

A. Testing Agency: Engage a qualified testing agency to perform tests and inspections.

B. Tests and Inspections:

1. Visually inspect cable placement, cable termination, grounding and bonding, equipment and patch cords, and labeling of all components.

C. End-to-end cabling will be considered defective if it does not pass tests and inspections.

END OF SECTION

PART 1 - GENERAL

1.1 SUMMARY

A. Section Includes:

1. Metal conduits, tubing, and fittings.
2. Nonmetallic conduits, tubing, and fittings.
3. Optical-fiber-cable pathways and fittings.
4. Metal wire ways and auxiliary gutters.
5. Nonmetallic wire ways and auxiliary gutters.
6. Surface pathways.
7. Boxes, enclosures, and cabinets.

1.2 SUMMARY

A. Section includes the security communications system

1.3 SYSTEM DESCRIPTION

A. Refer to 280500

PART 2 - PRODUCTS

2.1 METAL CONDUITS, TUBING, AND FITTINGS

A. General Requirements for Metal Conduits and Fittings:

1. Listed and labeled as defined in NFPA 70, by a qualified testing agency, and marked for intended location and application.
2. Comply with TIA-569-B.

B. GRC: Comply with ANSI C80.1 and UL 6.

C. ARC: Comply with ANSI C80.5 and UL 6A.

D. IMC: Comply with ANSI C80.6 and UL 1242.

E. PVC-Coated Steel Conduit: PVC-coated rigid steel conduit.

1. Comply with NEMA RN 1.
2. Coating Thickness: 0.040 inch, minimum.

F. EMT: Comply with ANSI C80.3 and UL 797.

G. FMC: Comply with UL 1; zinc-coated steel or aluminum.

H. LFMC: Flexible steel conduit with PVC jacket and complying with UL 360.

I. Fittings for Metal Conduit: Comply with NEMA FB 1 and UL 514B.

1. Conduit Fittings for Hazardous (Classified) Locations: Comply with UL 886 and NFPA 70.

2. Fittings for EMT:

a. Material: Steel

b. Type:Compression

3. Expansion Fittings:
PVC or steel to match conduit type, complying with UL 467, rated for environmental conditions where installed, and including flexible external bonding jumper.

4. Coating for Fittings for PVC-Coated Conduit:
Minimum thickness of 0.040 inch, with overlapping sleeves protecting threaded joints.

J. Joint Compound for IMC, GRC, or ARC:
Approved, as defined in NFPA 70, by authorities having jurisdiction for use in conduit assemblies, and compounded for use to lubricate and protect threaded conduit joints from corrosion and to enhance their conductivity.

2.2 NONMETALLIC CONDUITS, TUBING, AND FITTINGS

A. General Requirements for Nonmetallic Conduits and Fittings:

1. Listed and labeled as defined in NFPA 70, by a qualified testing agency, and marked for intended location and application.

2. Comply with TIA-569-B.

B. ENT: Comply with NEMA TC 13 and UL 1653.

C. RNC: Type EPC-40-PVC, complying with NEMA TC 2 and UL651 unless otherwise indicated.

D. LFNC: Comply with UL 1660.

E. Rigid HDPE: Comply with UL 651A.

F. Continuous HDPE: Comply with UL 651B.

G. RTRC: Comply with UL 1684A and NEMA TC 14.

H. Fittings for ENT and RNC: Comply with NEMA TC 3; match to conduit or tubing type and material.

I. Fittings for LFNC: Comply with UL 514B.

J. Solvent cements and adhesive primers shall have a VOC content of 510 and 550 g/L or less, respectively, when calculated according to 40 CFR 59, Subpart D (EPA Method 24).

K. Solvent cements and adhesive primers shall comply with the testing and product requirements of the California Department of Health Services' "Standard Practice for the Testing of Volatile Organic Emissions from Various Sources Using Small Scale Environmental Chambers."

2.3 OPTICAL-FIBER-CABLE PATHWAYS AND FITTINGS

A. Description:
Comply with UL 2024; flexible-type pathway, approved for plenum installation unless otherwise indicated.

1. Listed and labeled as defined in NFPA 70, by a qualified testing agency, and marked for intended location and application.

2. Comply with TIA-569-B.

2.4 METAL WIREWAYS AND AUXILIARY GUTTERS

A. Description:
Sheet metal, complying with UL 870 and NEMA 250, Type 4 unless otherwise indicated, and sized according to NFPA 70.

1. Metal wire ways installed outdoors shall be listed and labeled as defined in NFPA 70, by a qualified testing agency, and marked for intended location and application.

2. Comply with TIA-569-B.

B. Fittings and Accessories:
Include couplings, offsets, elbows, expansion joints, adapters, hold- down straps, end caps, and other fittings to match and mate with wire ways as required for complete system.

C. Wire way Covers: Hinged type unless otherwise indicated.

D. Finish: Manufacturer's standard enamel finish.

2.5 NONMETALLIC WIREWAYS AND AUXILIARY GUTTERS

A. General Requirements for Nonmetallic Wire ways and Auxiliary Gutters:

1. Listed and labeled as defined in NFPA 70, by a qualified testing agency, and marked for intended location and application.

2. Comply with TIA-569-B.

B. Description:
Fiberglass polyester extruded and fabricated to required size and shape, without holes or knockouts. Cover shall be gasketed with oil resistant gasket material and fastened with captive screws treated for corrosion resistance. Connections shall be flanged and have stainless steel screws and oil-resistant gaskets.

C. Fittings and Accessories:
Couplings, offsets, elbows, expansion joints, adapters, hold-down straps, end caps, and other fittings shall match and mate with wire ways as required for complete system.

D. Solvent cements and adhesive primers shall have a VOC content of 510 and 550 g/L or less, respectively, when calculated according to 40 CFR 59, Subpart D (EPA Method 24).

E. Solvent cements and adhesive primers shall comply with the testing and product requirements of the California Department of Health Services' "Standard Practice for the Testing of Volatile Organic Emissions from Various Sources Using Small Scale Environmental Chambers."

2.6 SURFACE PATHWAYS

A. General Requirements for Surface Pathways:

1. Listed and labeled as defined in NFPA 70, by a qualified testing agency, and marked for intended location and application.

2. Comply with TIA-569-B.

B. Surface Metal Pathways: Galvanized steel with snap-on covers complying with UL 5. Prime coated, ready for field painting.

C. Surface Nonmetallic Pathways:
Two- or three-piece construction, complying with UL 5A, and manufactured of rigid PVC with texture and color selected by Owner's Representative from manufacturer's standard colors. Product shall comply with UL 94 V-0 requirements for self-extinguishing characteristics.

2.7 BOXES, ENCLOSURES, AND CABINETS

A. General Requirements for Boxes, Enclosures, and Cabinets:

1. Comply with TIA-569-B.

2. Boxes, enclosures and cabinets installed in wet locations shall be listed for use in wet locations.

B. Sheet-Metal Outlet and Device Boxes: Comply with NEMA OS 1 and UL 514A.

C. Cast Metal Outlet and Device Boxes: Comply with NEMA FB 1, aluminum, Type FD, with gasketed cover.

D. Box extensions used to accommodate new building finishes shall be of same material as recessed box.

E. Small Sheet Metal Pull and Junction Boxes: NEMA OS 1.

F. Cast-Metal Access, Pull, and Junction Boxes: Comply with NEMA FB 1 and UL 1773, cast aluminum with gasketed cover.

G. Device Box Dimensions: 4-inches square by 2-1/8 inches deep

H. Gangable boxes are allowed

I. Nonmetallic Outlet and Device Boxes: Comply with NEMA OS 2 and UL 514C.

J. Hinged Cover Enclosures:
Comply with UL 50 and NEMA 250, Type 4 with continuous-hinge cover with flush latch unless otherwise indicated.

1. Metal Enclosures: Steel, finished inside and out with manufacturer's standard enamel.

2. Nonmetallic Enclosures:

   a. Material: Plastic

3. Interior Panels: Steel; all sides finished with manufacturer's standard enamel.

K. Cabinets:

1. NEMA 250, Type 3R, galvanized-steel box with removable interior panel and removable front, finished inside and out with manufacturer's standard enamel.

2. Hinged door in front cover with flush latch and concealed hinge.

3. Key latch to match panelboards.

4. Metal barriers to separate wiring of different systems and voltage.

5. Accessory feet where required for freestanding equipment.

6. Nonmetallic cabinets shall be listed and labeled as defined in NFPA 70, by a qualified testing agency, and marked for intended location and application.

PART 3 - EXECUTION

3.1 PATHWAY APPLICATION

A. Outdoors: Apply pathway products as specified below unless otherwise indicated:

1. Exposed Conduit: GRC, IMC, or RNC, Type EPC-40-PVC

2. Concealed Conduit, Aboveground: GRC, IMC, EMT, or RNC, Type EPC-40-PVC

3. Underground Conduit: RNC, Type EPC-40-PVC, Type EPC-80-PVC, direct buried, or concrete encased

4. Connection to Vibrating Equipment (Including Transformers and Hydraulic, Pneumatic, Electric Solenoid, or Motor-Driven Equipment): LFMC

5. Boxes and Enclosures, Aboveground: NEMA 250, Type 4

B. Indoors: Apply pathway products as specified below unless otherwise indicated:

1. Exposed, Not Subject to Physical Damage: EMT or RNC.

2. Exposed, Not Subject to Severe Physical Damage: EMT

3. Exposed and Subject to Severe Physical Damage: GRC

4. Pathway locations include the following:

   a. Loading dock.

   b. Corridors used for traffic of mechanized carts, forklifts, and pallet-handling units.

   c. Mechanical rooms.

   d. Gymnasiums

5. Concealed in Ceilings and Interior Walls and Partitions: EMT

6. Connection to Vibrating Equipment (Including Transformers and Hydraulic, Pneumatic, Electric-Solenoid, or Motor-Driven Equipment): FMC, except use LFMC in damp or wet locations.

7. Damp or Wet Locations: IMC.

8. Pathways for Optical-Fiber or Communications Cable in Spaces Used for Environmental Air: Plenum-type, optical fiber cable pathway.

9. Pathways for Optical Fiber or Communications-Cable Risers in Vertical Shafts: Riser type, optical fiber cable pathway.

10. Pathways for Concealed General-Purpose Distribution of Optical Fiber or Communications Cable: General use, optical fiber cable pathway or plenum type, optical fiber cable pathway.

11. Boxes and Enclosures: NEMA 250, Type 1, except use NEMA 250, Type 4 stainless steel in institutional and commercial kitchens and damp or wet locations.

C. Minimum Pathway Size: 1/2-inch trade size. Minimum size for optical-fiber cables is 1 inch.

D. Pathway Fittings: Compatible with pathways and suitable for use and location.

1. Rigid and Intermediate Steel Conduit: Use threaded rigid steel conduit fittings unless otherwise indicated. Comply with NEMA FB 2.10.

2. PVC Externally Coated, Rigid Steel Conduits:
Use only fittings listed for use with this type of conduit. Patch and seal all joints, nicks, and scrapes in PVC coating after installing conduits and fittings. Use sealant recommended by fitting manufacturer and apply in thickness and number of coats recommended by manufacturer.

3. EMT: Use compression, fittings. Comply with NEMA FB 2.10.

4. Flexible Conduit: Use only fittings listed for use with flexible conduit. Comply with NEMA FB 2.20.

E. Do not install aluminum conduits, boxes, or fittings in contact with concrete or earth.

F. Install surface pathways only where approved by Owner.

G. Do not install nonmetallic conduit where ambient temperature exceeds 120°F.

3.2 INSTALLATION

A. Comply with NECA 1, NECA 101, and TIA-569-B for installation requirements except where requirements on Drawings or in this article are stricter. Comply with NECA 102 for aluminum pathways. Comply with NFPA 70 limitations for types of pathways allowed in specific occupancies and number of floors.

B. Keep pathways at least 6 inches away from parallel runs of flues and steam or hot-water pipes. Install horizontal pathway runs above water and steam piping.

C. Complete pathway installation before starting conductor installation.

D. Comply with requirements in Section 260529 "Hangers and Supports for Electrical Systems" for hangers and supports.

E. Arrange stub-ups so curved portions of bends are not visible above finished slab.

F. Conceal conduit and EMT within finished walls, ceilings, and floors unless otherwise indicated. Install conduits parallel or perpendicular to building lines.

G. Support conduit within 12 inches of enclosures to which attached.

H. Stub-ups to Above Recessed Ceilings:

1. Use EMT, IMC, or RMC for pathways.

2. Use a conduit bushing or insulated fitting to terminate stub-ups not terminated in hubs or in an enclosure.

I. Threaded Conduit Joints, Exposed to Wet, Damp, Corrosive, or Outdoor Conditions: Apply listed compound to threads of pathway and fittings before making up joints. Follow compound manufacturer's written instructions.

J. Coat field cut threads on PVC coated pathway with a corrosion preventing conductive compound prior to assembly.

K. Terminate threaded conduits into threaded hubs or with locknuts on inside and outside of boxes or cabinets. Install insulated bushings on conduits terminated with locknuts.

L. Install pathways square to the enclosure and terminate at enclosures with locknuts. Install locknuts hand tight plus 1/4 turn more.

M. Do not rely on locknuts to penetrate nonconductive coatings on enclosures. Remove coatings in the locknut area prior to conduit assembly to assure a continuous ground path.

N. Cut conduit perpendicular to the length. For conduits of 2-inch trade size and larger, use roll cutter or a guide to ensure cut is straight and perpendicular to the length.

O. Install pull wires in empty pathways. Use polypropylene or monofilament plastic line with not less than 200-lb tensile strength. Leave at least 12 inches of slack at each end of pull wire.

P. Surface Pathways:

1. Install surface pathway for surface electrical outlet boxes only where indicated on Drawings.

2. Install surface pathway with a minimum 2-inch radius control at bend points.

3. Secure surface pathway with screws or other anchor type devices at intervals not exceeding 48 inches and with no less than two supports per straight pathway section. Support surface pathway according to manufacturer's written instructions. Tape and glue are not acceptable support methods.

Q. <u>Pathways for Optical Fiber and Communications Cable</u>: Install pathways, metal and nonmetallic, rigid and flexible, as follows:

1. 3/4-Inch Trade Size and Smaller: Install pathways in maximum lengths of 50 feet.

2. 1-Inch Trade Size and Larger: Install pathways in maximum lengths of 75 feet.

3. Install with a maximum of two 90-degree bends or equivalent for each length of pathway unless Drawings show stricter requirements. Separate lengths with pull or junction boxes or terminations at distribution frames or cabinets where necessary to comply with these requirements.

R. Install pathway sealing fittings at accessible locations according to NFPA 70 and fill them with listed sealing compound. For concealed pathways, install each fitting in a flush steel box with a blank cover plate having a finish like that of adjacent plates or surfaces. Install pathway sealing fittings according to NFPA 70.

S. Install devices to seal pathway interiors at accessible locations. Locate seals so no fittings or boxes are between the seal and the following changes of environments. Seal the interior of all pathways at the following points:

1. Where conduits pass from warm to cold locations, such as boundaries of refrigerated spaces.

2. Where otherwise required by NFPA 70.

T. Comply with manufacturer's written instructions for solvent welding PVC conduit and fittings.

U. Expansion-Joint Fittings:

1. Install in each run of aboveground RNC that is located where environmental temperature change may exceed 30°F, and that has straight-run length that exceeds 25 feet. Install in each run of aboveground RMC and EMT conduit that is located where environmental temperature change may exceed 100°F and that has straight-run length that exceeds 100 feet.

2. Install type and quantity of fittings that accommodate temperature change listed for each of the following locations:

   a. Indoor Spaces Connected with Outdoors without Physical Separation: 125°F temperature change.

   b. Attics: 135°F temperature change.

3. Install fitting(s) that provide expansion and contraction for at least 0.00041 inch per foot of length of straight run per degree Fahrenheit of temperature change for PVC conduits. Install fitting(s) that provide expansion and contraction for at least 0.000078 inch per foot of length of straight run per degree Fahrenheit of temperature change for metal conduits.

4. Install expansion fittings at all locations where conduits cross building or structure expansion joints.

5. Install each expansion-joint fitting with position, mounting, and piston setting selected according to manufacturer's written instructions for conditions at specific location at time of installation. Install conduit supports to allow for expansion movement.

V. Flexible Conduit Connections:
Comply with NEMA RV 3. Use maximum of 72 inches of flexible conduit for recessed and semi-recessed luminaires, equipment subject to vibration, noise transmission, or movement; and for transformers and motors.

1. Use LFMC in damp or wet locations subject to severe physical damage.

2. Use LFMC or LFNC in damp or wet locations not subject to severe physical damage.

W. Mount boxes at heights indicated on Drawings. If mounting heights of boxes are not individually indicated, give priority to ADA requirements. Install boxes with height measured to center of box unless otherwise indicated.

X. Recessed Boxes in Masonry Walls:
Saw-cut opening for box in center of cell of masonry block and install box flush with surface of wall. Prepare block surface to provide a flat surface for a rain tight connection between box and cover plate or supported equipment and box.

Y. Horizontally separate boxes mounted on opposite sides of walls, so they are not in the same vertical channel.

Z. Support boxes of three gangs or more from more than one side by spanning two framing members or mounting on brackets specifically designed for the purpose.

AA. Fasten junction and pull boxes to or support from building structure. Do not support boxes by conduits.

3.3 INSTALLATION OF UNDERGROUND CONDUIT

A. Direct Buried Conduit:

1. Excavate trench bottom to provide firm and uniform support for conduit. Prepare trench bottom for pipe less than 6 inches in nominal diameter.

2. Install backfill.

3. After installing conduit, backfill and compact. Start at tie-in point, and work toward end of conduit run, leaving conduit at end of run free to move with expansion and contraction as temperature changes during this process. Firmly hand tamp backfill around conduit to provide maximum supporting strength. After placing controlled backfill to within 12 inches of finished grade, make final conduit connection at end of run and complete backfilling with normal compaction.

4. Install manufactured duct elbows for stub-ups at poles and equipment and at building entrances through floor unless otherwise indicated. Encase elbows for stub-up ducts throughout the length of elbow.

   a. Couple steel conduits to ducts with adapters designed for this purpose and encase coupling with 3 inches of concrete for a minimum of 12 inches on each side of the coupling.

   b. For stub-ups at equipment mounted on outdoor concrete bases and where conduits penetrate building foundations, extend steel conduit horizontally a minimum of 60 inches from edge of foundation or equipment base. Install insulated grounding bushings on terminations at equipment.

5. Warning Planks:
Bury warning planks approximately 12 inches above direct buried conduits, but a minimum of 6 inches below grade. Align planks along centerline of conduit.

6. Underground Warning Tape: Comply with requirements in Section 260553 "Identification for Electrical Systems."

3.4 INSTALLATION OF UNDERGROUND HANDHOLES AND BOXES

A. Install hand holes and boxes level and plumb and with orientation and depth coordinated with connecting conduits to minimize bends and deflections required for proper entrances.

B. Unless otherwise indicated, support units on a level bed of crushed stone or gravel, graded from 1/2-inch sieve to No. 4 sieve and compacted to same density as adjacent undisturbed earth.

C. Elevation:
In paved areas, set so cover surface will be flush with finished grade. Set covers of other enclosures 1 inch above finished grade.

D. Install removable hardware, including pulling eyes, cable stanchions, cable arms, and insulators, as required for installation and support of cables and conductors and as indicated. Select arm lengths to be long enough to provide spare space for future cables, but short enough to preserve adequate working clearances in enclosure.

E. Field cut openings for conduits according to enclosure manufacturer's written instructions. Cut wall of enclosure with a tool designed for material to be cut. Size holes for terminating fittings to be used, and seal around penetrations after fittings are installed.

3.5 SLEEVE AND SLEEVE-SEAL INSTALLATION FOR ELECTRONIC SAFETY AND SECURITY PENETRATIONS

A. Install sleeves and sleeve seals at penetrations of exterior floor and wall assemblies. Comply with requirements in Section 260544 "Sleeves and Sleeve Seals for Electronic Safety and Security Pathways and Cabling."

3.6 PROTECTION

A. Protect coatings, finishes, and cabinets from damage and deterioration.

1. Repair damage to galvanized finishes with zinc rich paint recommended by manufacturer.

2. Repair damage to PVC coatings or paint finishes with matching touchup coating recommended by manufacturer.

END OF SECTION

U.S.V.I. DEPARTMENT OF PUBLIC WORKS OFFICE BUILDING
SECOND FLOOR RENOVATION

PARCEL NO 6 ESTATE SUSANNABERG
ST. JOHN, U.S.V.I 00830

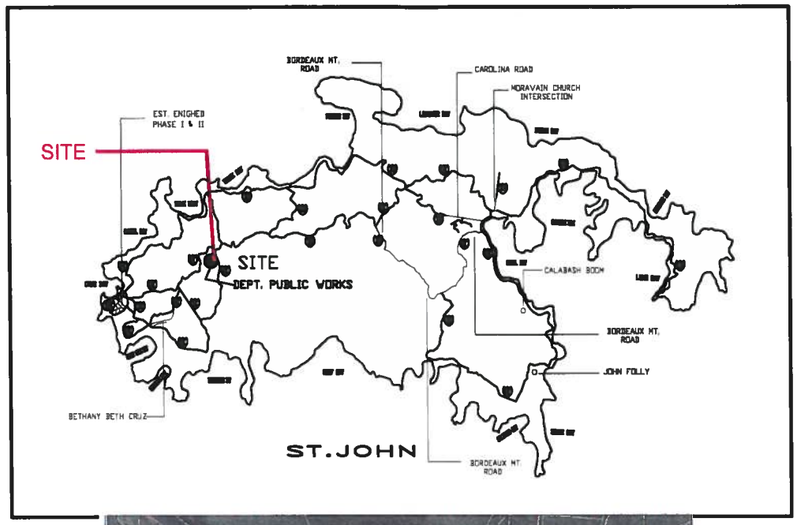

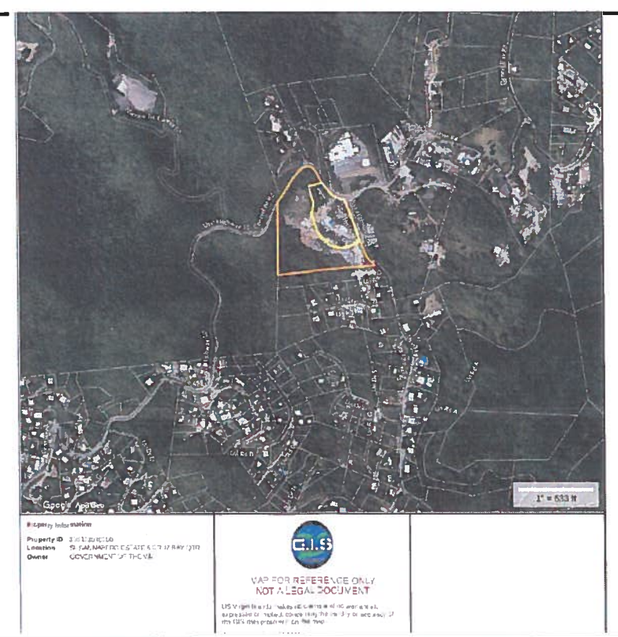

INDEX OF DRAWINGS

A0.0	COVER SHEET
A1.0	EXISTING AND DEMOLITION PLANS
A1.1	PROPOSED FLOOR PLAN
A1.2	REFLECTED CEILING PLAN
A2.0	BUILDING ELEVATIONS EXISTING
A2.1	BUILDING ELEVATIONS PROPOSED
A3.0	DETAILS
A4.0	FINISH SCHEDULES
A5.0	DETAIL
S1.0	STAIR DETAILS
E1.0	POWER AND LIGHTING PLAN
M1.0	HVAC PLAN SECOND FLOOR
M0.1	HVAC NOTES LEGEND
M0.2	HVAC SCHEDULES
M2.0	HVAC DETAILS

HONORABLE ALBERT E. BRYAN
GOVERNOR

HONORABLE TREN\GENZA ROACH
LIEUTENANT GOVERNOR

HONORABLE NELSON M. PETTY JR. , PE
COMMISSIONER OF THE, DEPARTMENT OF PUBLIC WORKS

HONORABLE ANTHONY D. THOMAS
COMMISSIONER OF
THE, DEPARTMENT OF PROPERTY AND PROCUREMENT

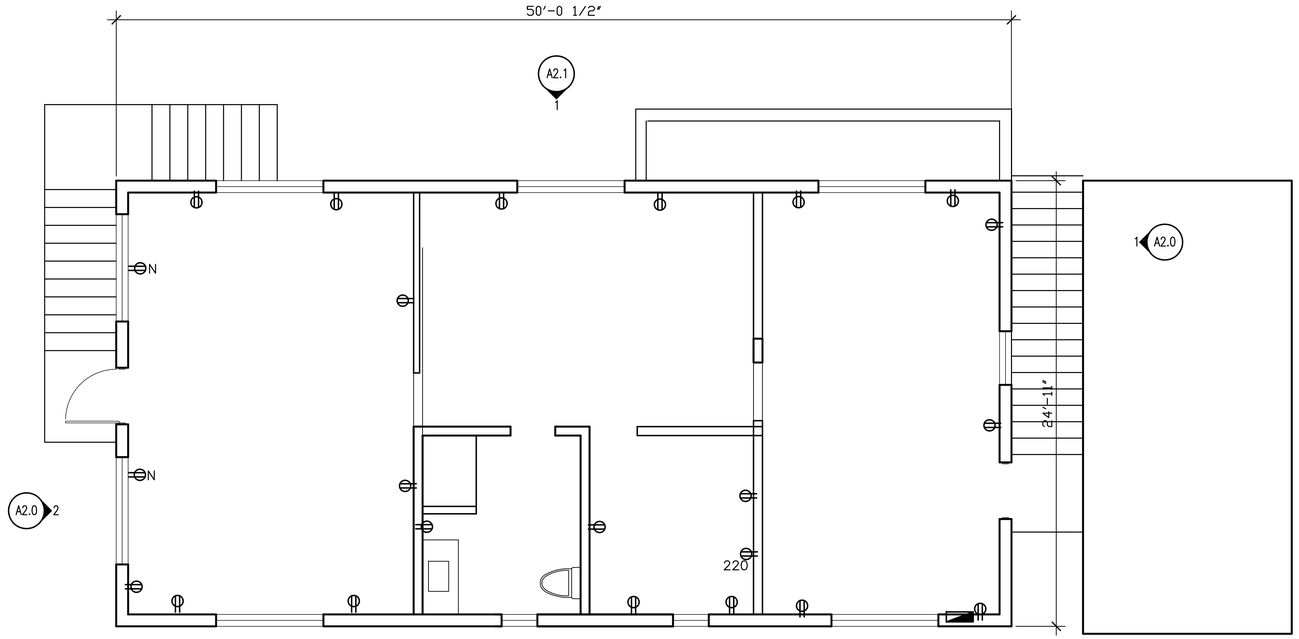

1 EXISTING SECOND LEVEL FLOOR PLAN

A1.0 | A1.0 SCALE: 1/4" =1'-0"

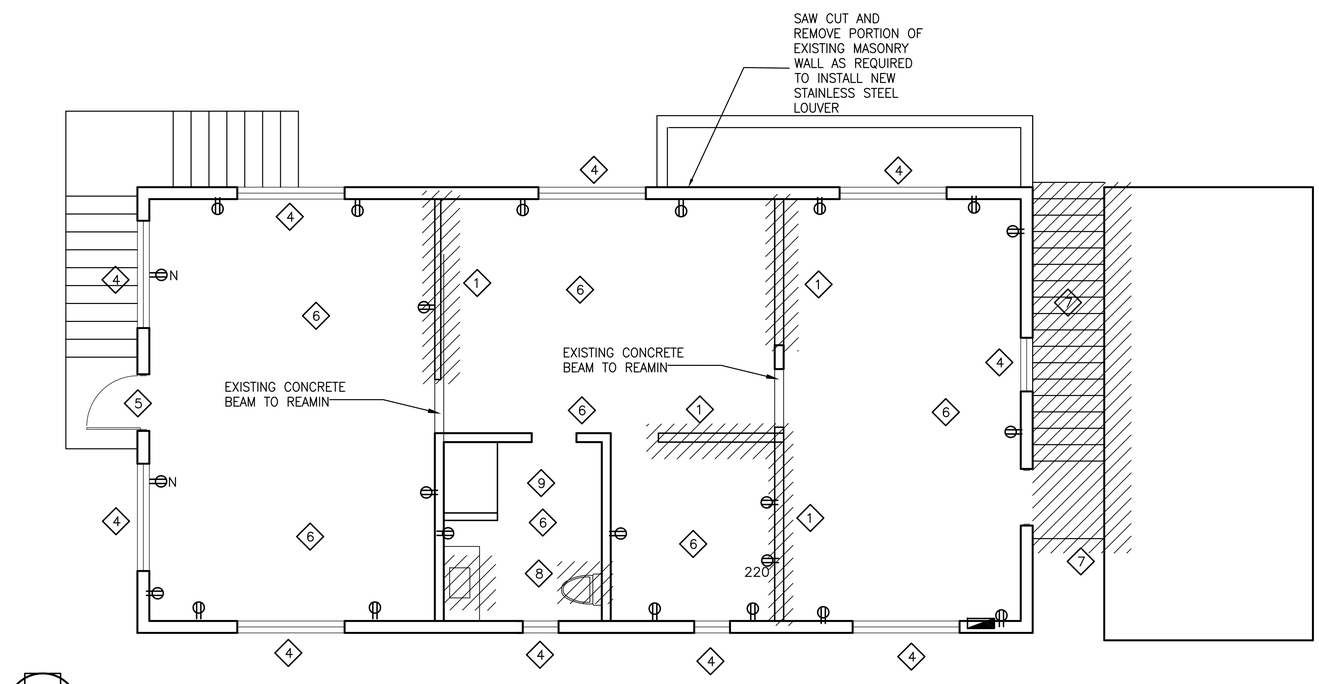

2 EXISTING SECOND LEVEL DEMOLITION PLAN

A1.0 | A1.0 SCALE: 1/4" =1'-0"

GENERAL DEMOLITION NOTES

1. CONTRACTOR SHALL FIELD VERIFY ALL EXISTING CONDITIONS AND BE FAMILIAR WITH ALL SYSTEMS BEFORE DEMOLITION. ALL DEMOLITION SHALL COMPLY WITH THE RULES AND REGULATIONS OF THE FEDERAL, STATE, COUNTY AND CITY GOVERNMENTS. EXISTING SERVICES SHALL BE MAINTAINED DURING DEMOLITION, ANY SHUTDOWNS OF SYSTEMS MUST BE COORDINATED AND APPROVED BY THE OWNER. COORDINATE WORK WITH ALL TRADES AND PROVIDE SUPERVISION WHILE WORK IS BEING PERFORMED.
2. THE CONTRACTOR SHALL VERIFY WITH THE OWNER ALL MATERIALS TO BE RETAINED BY THE OWNER AND DELIVER AND STORE SAME WHERE DIRECTED BY THE OWNER. ALL REMAINING ITEMS BECOME THE PROPERTY OF THE CONTRACTOR AND SHALL BE DISPOSED OF IN A LEGAL MANNER.
3. WHERE WALLS HAVE BEEN REMOVED CONTRACTOR SHALL USE SELF LEVELING COMPOUND TO PROVIDE A LEVEL SURFACE BETWEEN ADJACENT SPACES.
4. REMOVE EXISTING ELEMENTS AS INDICATED BY LEGEND. SURFACES OF EXISTING AREAS WHICH HAVE BEEN ALTERED BY DEMOLITION NOT SPECIFICALLY CALLED FOR SHALL BE REPAIRED AND FINISHED TO MATCH THE ADJACENT SURFACES. PROTECT ALL EXISTING OR REMAINING SURFACES, FLOORS, WALLS, CEILINGS, FROM AREAS OF DEMOLITION AND NEW CONSTRUCTION.
5. CONTRACTOR SHALL FIELD VERIFY THE EXISTING CONDITIONS AND NOTIFY THE ARCHITECT OF DISSIMILARITIES BEFORE PROCEEDING WITH DEMOLITION WORK. ALL WORK SHALL BE COORDINATED WITH DRAWINGS FOR NEW CONSTRUCTION.
6. CONTRACTOR SHALL FIELD VERIFY ALL DIMENSIONS PRIOR TO DEMOLITION OR CONSTRUCTION IN EXISTING AREAS.
7. ERECT AND MAINTAIN DUST PROOF PARTITIONS AS REQUIRED TO PREVENT THE SPREAD OF DUST, FUMES, AND SMOKE TO OTHER PARTS OF THE BUILDING, MAINTAIN EXIT REQUIREMENTS. COORDINATE EXACT LOCATION WITH OWNER. ON COMPLETION OF NEW WORK, REMOVE TEMPORARY PARTITIONS AND REPAIR DAMAGED SURFACES TO MATCH ADJACENT SURFACES.
8. ARRANGE AND PAY FOR DISCONNECTING, REMOVING, AND CAPPING UTILITY SERVICES WITHIN AREAS OF DEMOLITION. DISCONNECT AND STUB-OFF, NOTIFY THE AFFECTED UTILITY COMPANY AND OBTAIN APPROVAL BEFORE STARTING THIS WORK.
9. EXISTING ELECTRICAL CONDUITS AND PLUMBING SHALL BE REMOVED AND OR CONDEMED.
10. THE OWNER RESERVES THE RIGHT TO SALVAGE ANY MATERIAL OR PORTION THEREOF FROM DEMOLISHED MATERIAL BEFORE IT IS DISPOSED OF.
11. THE GENERAL CONTRACTOR IS RESPONSIBLE FOR THE MEANS AND METHODS OF CONSTRUCTION TECHNIQUES TO INSURE A SAFE AND QUALITY JOB.
12. THE EXISTING ELECTRICAL SYSTEM TO BE REMOVED AND DISCARDED. IT IS THE PROJECT INTENT TO INSTALL A NEW SYSTEM COMPLETE WITH LIGHTING AND POWER AND PANEL BOX.

DEMOLITION TASK LEGEND

1. REMOVE AND DISCARD EXISTING STUD FRAMING
2. REMOVED AND DISCARD TILES ON SLAB
3. REMOVE AND DISCARD EXISTING STAIRS
4. REMOVED AND DISCARD EXISTING WINDOWS
5. REMOVED AND DISCARD EXISTING DOORS
6. REMOVE AND DISCARD EXISTING TILED FLOORING
7. REMOVE EXISTING STAIRS
8. REMOVE AND DISCARD BATHROOM FIXTURES
9. REMOVE AND DISCARD CEMENT PLASTER CEILING AND FRAMING

DEMOLITION LEGEND

WALL TO REMAIN

ITEMS TO BE REMOVED AND DISCARDED

1 DESCRIPTION OF TASK TO BE PERFORMED

REVISIONS		
NO:	DATE:	REMARKS

Government of the Virgin Islands
Department of Public Works
8244 Sub Base
St. Thomas, U.S.V.I 00802-5805
telephone: 340.776.4844
fax: 340.715.8135

Department of Public Works
Office Building
Second Floor Renovation
Parcel No. 6 Estate Susannaberg
St. John U.S.V.I 008030

DATE:	7/8/19
DRAWN BY:	KRB
CHECKED BY:	JM
APPROVED BY:	NMP

PROJECT NO.:

CONTRACT NO.:

SHEET NO.:

A1.0

EXISTING AND DEMOLITION PLANS

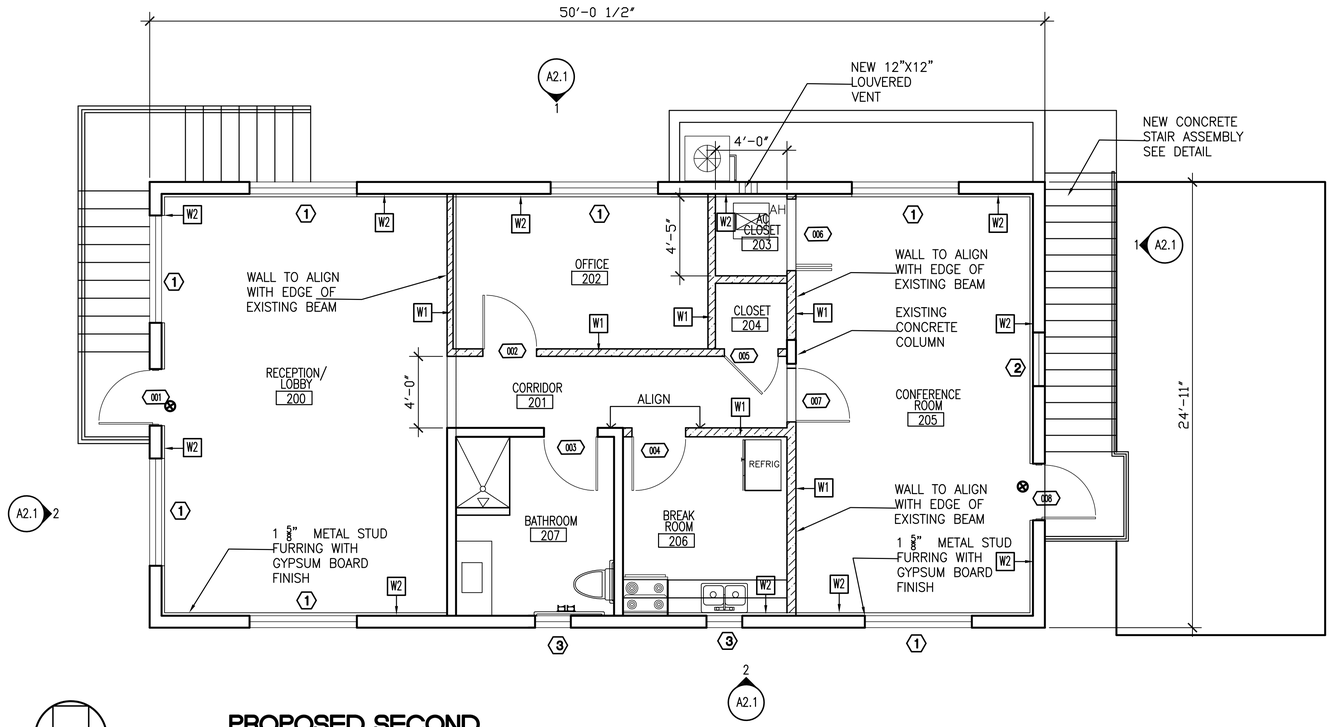

PROPOSED SECOND LEVEL FLOOR PLAN

1 | A1.1 A1.1

SCALE: 1/4" =1'-0"

LEGEND

- EXISTING CMU WALL
- INTERIOR STUD FRAMED WALL
- ELEV# / DWG# — ELEVATION REFERENCE KEY
- 2 — WINDOW TYPE REFERENCE KEY
- 2138 — DOOR TYPE REFERENCE KEY
- W2 — WALL TYPE DESIGNATION

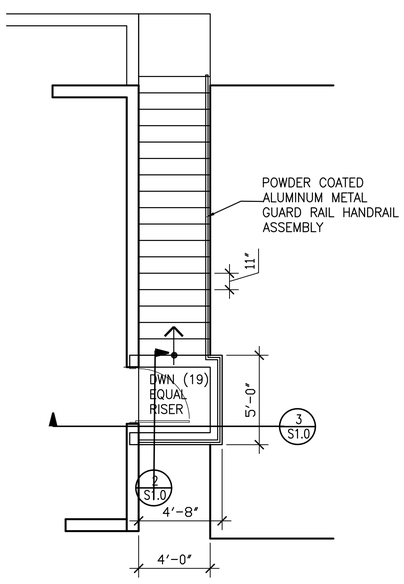

SECOND LEVEL STAIR PLAN

2 | A1.1 A1.1

SCALE: 1/4" =1'-0"

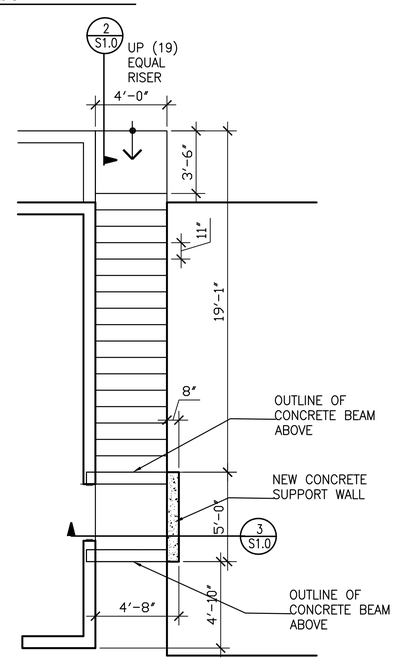

FIRST LEVEL STAIR PLAN

3 | A1.1 A1.1

SCALE: 1/4" =1'-0"

REVISIONS		
NO:	DATE:	REMARKS

Government of the Virgin Islands
Department of Public Works
8244 Sub Base
St. Thomas, U.S.V.I 00802-5805
telephone: 340.776.4844
fax: 340.715.8135

Department of Public Works
Office Building
Second Floor Renovation
Parcel No. 6 Estate Susannaberg
St. John U.S.V.I 008030

DATE:	7/8/19
DRAWN BY:	KRB
CHECKED BY:	JM
APPROVED BY:	NMP

PROJECT NO.:

CONTRACT NO.:

SHEET NO.:

A1.1

PROPOSED PLAN

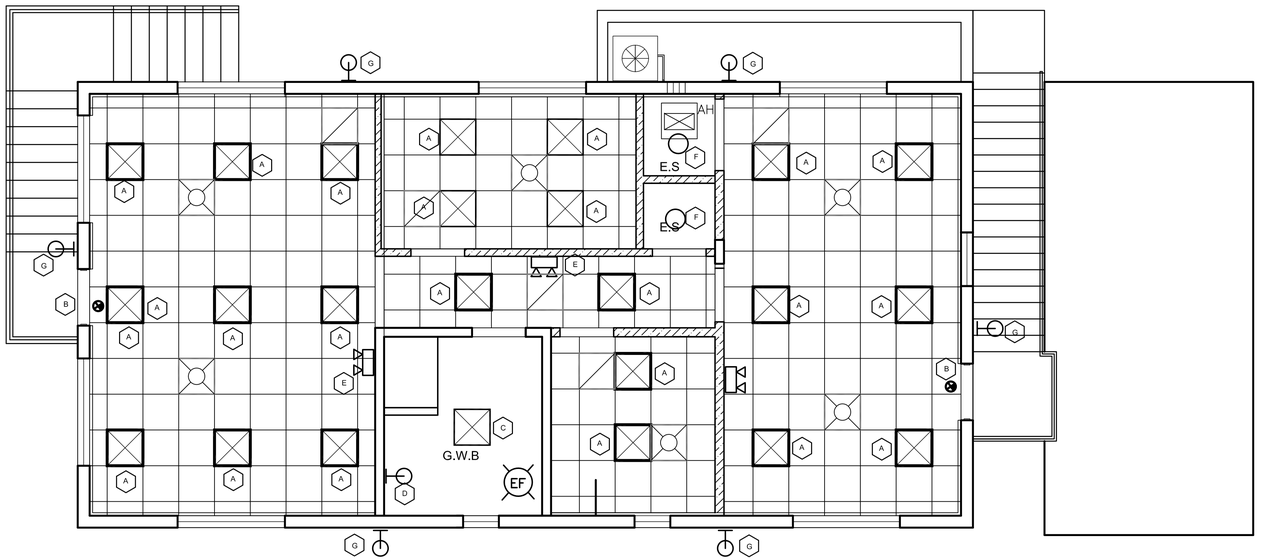

PROPOSED SECOND FLOOR REFLECTED CEILING PLAN

1 | A1.2 | A1.2

SCALE: 1/4" =1'-0"

CEILING PENETRATION LEGEND

- CEILING GRILLE, REGISTER FOR RETURN OR EXHAUST AIR
- EXHAUST FAN
- CEILING SUPPLY DIFFUSER RECTANGULAR OR SQUARE
- EXHAUST FAN
- RECESSED, SURFACE, OR PENDANT MOUNTED FLUORESCENT FIXTURE SEE FIXTURE SCHEDULE
- RECESSED, SURFACE, OR PENDANT MOUNTED DOWNLIGHT
- CEILING MOUNTED EXIT LIGHT WITH DIRECTIONAL ARROWS
- CEILING MOUNTED LIGHT FIXTURES
- FLUORESCENT LIGHT FIXTURES

E.S. EXPOSED STRUCTURE

G.W.B GYPSUM WALL BOARD

C.W.B CEMENT WALL BOARD

ACOUSTIC CEILING TILES SHALL BE 24"X24" INSULATED ACOUSTI-THERM OR APPROVED EQUAL

LIGHTING FIXTURE SCHEDULE

TYPE	Description	Lamp	Lumens	MANUFACTURER	LLF
A	2X2 LED RECESSED TROFFER LIGHT FIXTURE			TCP , LITHONIA OR APPROVED EQUAL	
B	THERMOPLASTIC LED EXIT LIGHT EMERGENCY BATTERY BACK UP			HONEY WELL, LITHONIA OR APPROVED EQUAL	
C	CEILING MOUNTED LIGHT FIXTURE				
D	DECORATIVE WALL SCONCE				
E	DUAL HEAD EMERGENCY LIGHT WITH BATTERY BACK UP			HONEY WELL, LITHONIA OR APPROVED EQUAL	
F	CEILING HUNG DOWN LIGHT FIXTURE ASSEMBLY			COMPACT FLUORESCENT LAMP	
G	HONEY WELL LED WALL PACK SECURITY LIGHT ASSEMLBY			HONEY WELL, LITHONIA OR APPROVED EQUAL	

REVISIONS

NO:	DATE:	REMARKS

Government of the Virgin Islands
Department of Public Works
8244 Sub Base
St. Thomas, U.S.V.I 00802-5805
telephone: 340.776.4844
fax: 340.715.8135

Department of Public Works
Office Building
Second Floor Renovation
Parcel No. 6 Estate Susannaberg
St. John U.S.V.I 008030

DATE: 7/8/19

DRAWN BY: KRB

CHECKED BY: JM

APPROVED BY: NMP

PROJECT NO.:

CONTRACT NO.:

SHEET NO.: A1.2

REFLECTED CEILING

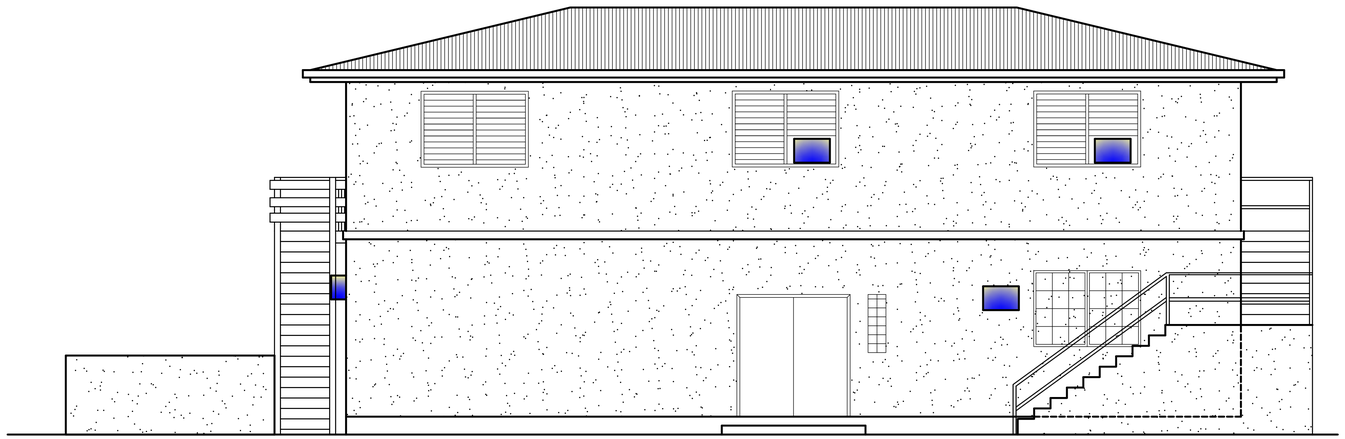

FRONT ELEVATION

1	EXISTING FRONT ELEVATION
A2.0 A2.0	SCALE: 1/4" =1'-0"

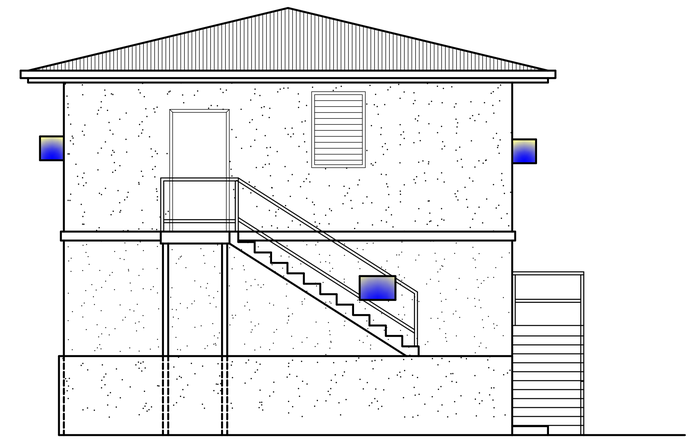

3	EXISTING SIDE ELEVATION
A2.0 A2.0	SCALE: 1/4" =1'-0"

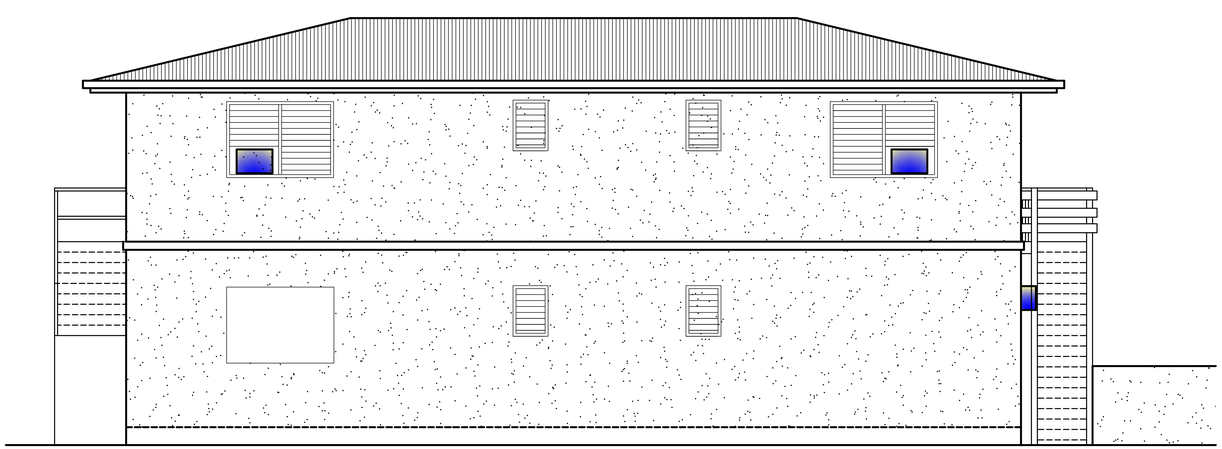

2	EXISTING REAR ELEVATION
A2.0 A2.0	SCALE: 1/4" =1'-0"

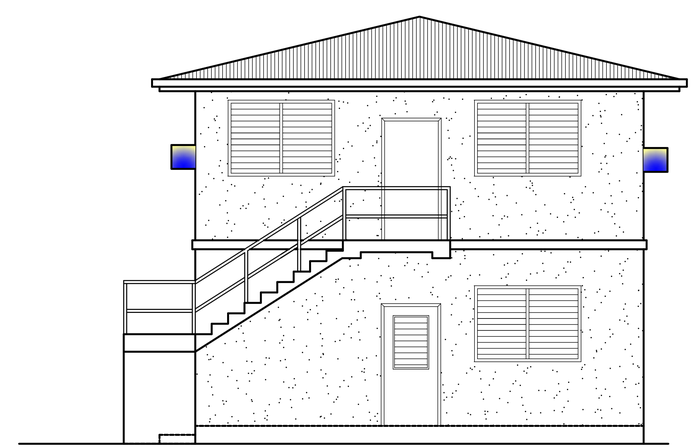

4	EXISTING SIDE ELEVATION
A2.0 A2.0	SCALE: 1/4" =1'-0"

REVISIONS

NO:	DATE:	REMARKS

Government of the Virgin Islands
Department of Public Works
8244 Sub Base
St. Thomas, U.S.V.I 008802-5805
telephone: 340.776.4844
fax: 340.715.8135

Department of Public Works
Office Building
Second Floor Renovation
Parcel No. 6 Estate Susannaberg
St. John U.S.V.I 008030

DATE:	7/8/19
DRAWN BY:	KRB
CHECKED BY:	JM
APPROVED BY:	NMP

PROJECT NO.:

CONTRACT NO.:

SHEET NO.:

A2.0

EXISTING BUILDING ELEVATION

FRONT ELEVATION

SCALE: 1/4"=1'-0"

1	PROPOSED FRONT ELEVATION
A2.1 A2.1	SCALE: 1/4" =1'-0"

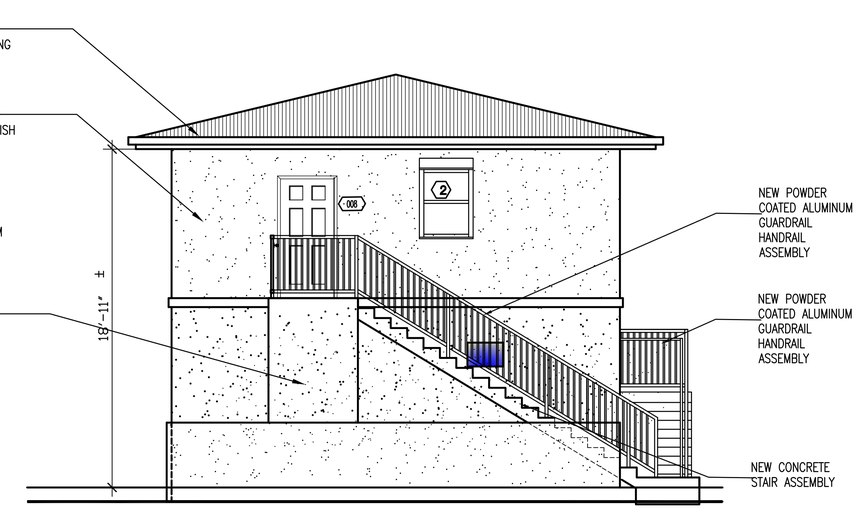

LEFT ELEVATION

SCALE: 1/4"=1'-0"

3	PROPOSED SIDE ELEVATION
A2.1 A2.1	SCALE: 1/4" =1'-0"

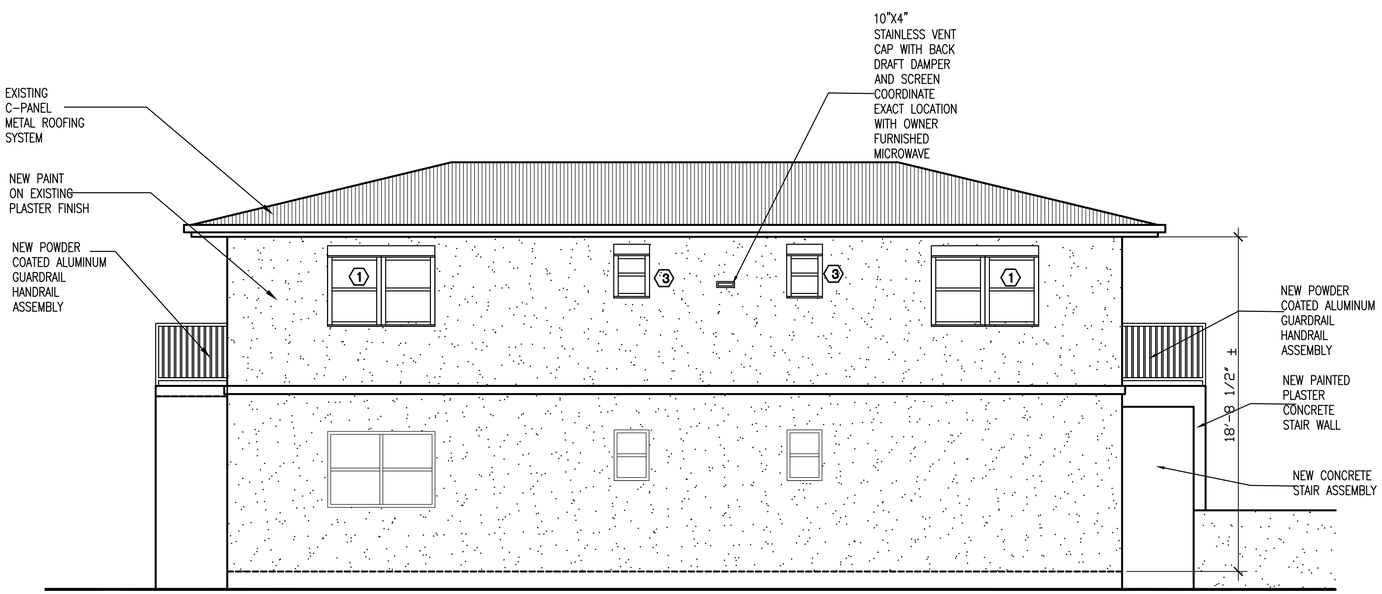

REAR ELEVATION

2	PROPOSED REAR ELEVATION
A2.1 A2.1	SCALE: 1/4" =1'-0"

RIGHT ELEVATION

SCALE: 1/4"=1'-0"

4	PROPOSED SIDE ELEVATION
A2.1 A2.1	SCALE: 1/4" =1'-0"

REVISIONS

NO:	DATE:	REMARKS

Government of the Virgin Islands
Department of Public Works
8244 Sub Base
St. Thomas, U.S.V.I 00802-5805
telephone: 340.776.4844
fax: 340.715.8135

Department of Public Works
Office Building
Second Floor Renovation
Parcel No. 6 Estate Susannaberg
St. John U.S.V.I 008030

DATE:	7/8/19
DRAWN BY:	KRB
CHECKED BY:	JM
APPROVED BY:	NMP

PROJECT NO.:

CONTRACT NO.:

SHEET NO.:

A2.1

PROPOSED ELEVATIONS

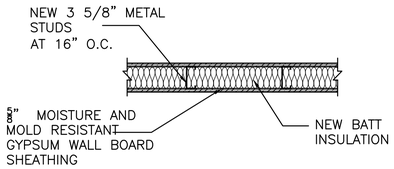

1 WALL DETAIL TYPE W1

A3.0 | A3.0 SCALE: 1"=1'-0"

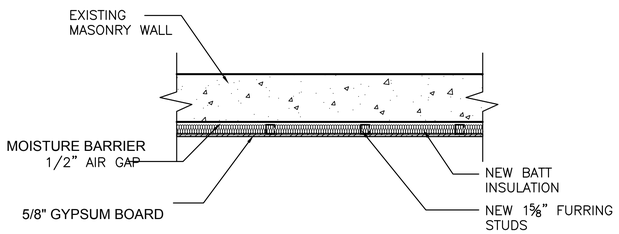

2 WALL DETAIL TYPE W2

A3.0 | A3.0 SCALE: 1"=1'-0"

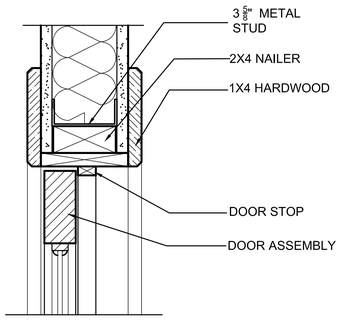

3 DOOR HEADER DETAIL

A3.0 | A3.0 SCALE: 3"=1'-0"

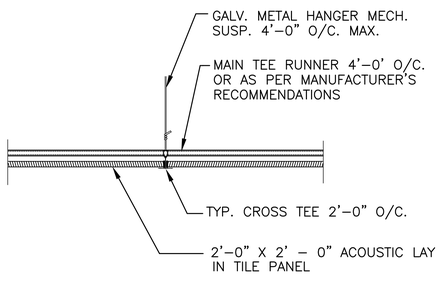

4 TYPICAL SUSPENDED CEILING DETAIL

A3.0 | A3.0 SCALE: NOT TO SCALE

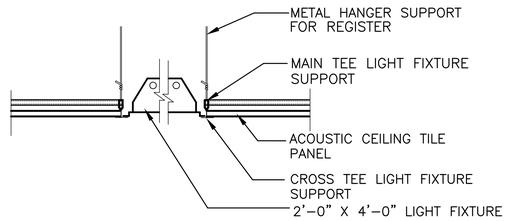

5 CEILING DETAIL AT LIGHT FIXTURE

A3.0 | A3.0 SCALE: NOT TO SCALE

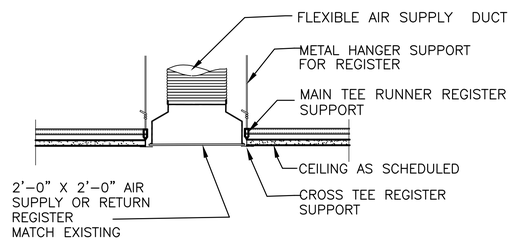

6 CEILING DETAIL AT DIFUSER

A3.0 | A3.0 SCALE: NOT TO SCALE

ACOUSTIC CEILING TILES SHALL BE 24"X24" INSULATED ACOUSTI-THERM OR APPROVED EQUAL

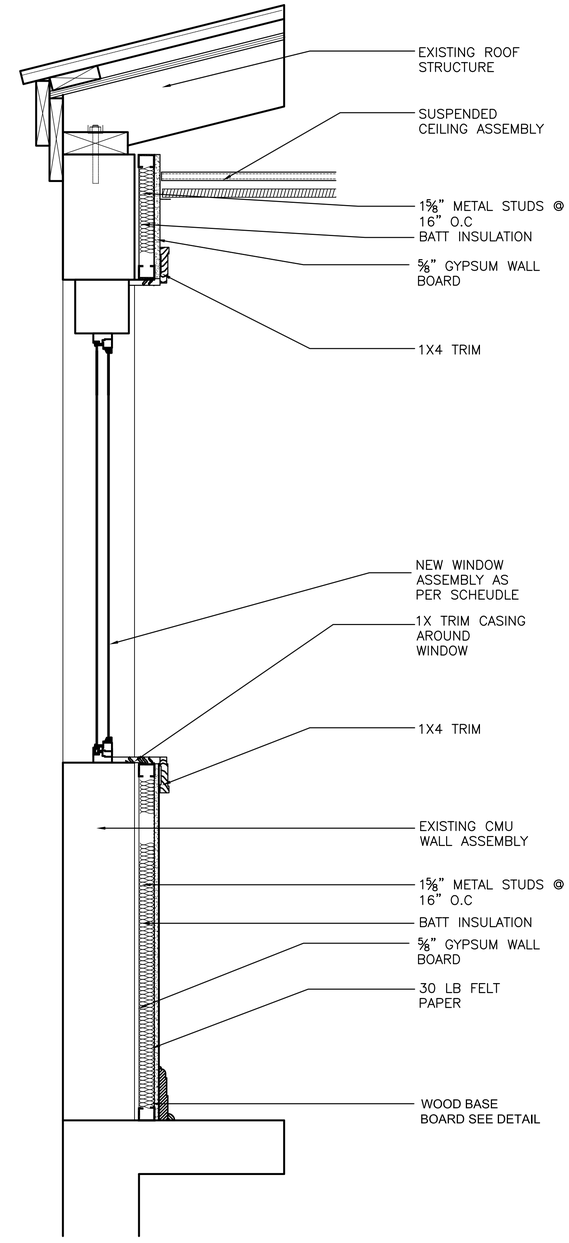

7 WALL SECTION

A3.0 | A3.0 SCALE: NOT TO SCALE

REVISIONS		
NO:	DATE:	REMARKS

Government of the Virgin Islands
Department of Public Works
8244 Sub Base
St. Thomas, U.S.V.I 00802-5805
telephone: 340.776.4844
fax: 340.715.8135

Department of Public Works
Office Building
Second Floor Renovation
Parcel No. 6 Estate Susannaberg
St. John U.S.V.I 008030

DATE:	7/8/19
DRAWN BY:	KRB
CHECKED BY:	JM
APPROVED BY:	NMP

PROJECT NO:

CONTRACT NO:

SHEET NO:

A3.0

DETAILS

ROOM FINISH SCHEDULE

ROOM NO	NAME	FLOOR		BASE		WALL								CEILING			REMARKS
						NORTH		EAST		SOUTH		WEST					
		MATL	FIN	MATL	FIN	MATL	FIN	MATL	FIN	MATL	FIN	MATL	FIN	MATL	FIN	HEIGHT	
SECOND FLOOR																	
200	RECEPTION / LOBB	CONC.	T	B2	PNT	GWB	PNT	GWB	PNT	GWB	PNT	GWB	PNT	ACT		8'-7"	
201	CORRIDOR	CONC.	T	B2	PNT	GWB	PNT	GWB	PNT	GWB	PNT	GWB	PNT	ACT		8'-7"	
202	OFFICE	CONC.	T	B2	PNT	GWB	PNT	GWB	PNT	GWB	PNT	GWB	PNT	ACT		8'-7"	
203	AC CLOSET	CONC.	T	B2	PNT	GWB	PNT	GWB	PNT	GWB	PNT	GWB	PNT	ACT		8'-7"	
204	CLOSET	CONC.	T	B2	PNT	GWB	PNT	GWB	PNT	GWB	PNT	GWB	PNT	ACT		8'-7"	
205	CONFERENCE ROOM	CONC.	T	B2	PNT	GWB	PNT	GWB	PNT	GWB	PNT	GWB	PNT	ACT		8'-7"	
206	BREAKROOM	CONC.	T	B2	PNT	GWB	PNT	GWB	PNT	GWB	PNT	GWB	PNT	ACT		8'-7"	
207	BATHROOM	CONC.	T	B1	PNT	GWB	PNT	GWB	PNT	GWB	PNT	GWB	PNT	GWM		8'-7"	TILED WAINSCOT

FIRST FLOOR DOOR SCHEDULE

DOOR NUMBER	DESCRIPTION	TYPE	QTY	SIZE W	SIZE H	SIZE T	HARDWARE	CLOSURE (Y, N)	KICK PLATES	REMARKS
001	IMPACT GLASS DOOR AND FRAME ASSEMBLY	D		36"	80"					PROVIDE DOOR CLOSURE AND POWER OPERATED OVER SURFACE MOUNTED ROLL DOWN SHUTTER
002	SOLID CORE WOOD STYLE AND RAIL	A		36"	80"					
003	SOLID CORE WOOD STYLE AND RAIL	A		36"	80"					
004	SOLID CORE WOOD STYLE AND RAIL	A		36"	80"					
005	WOOD LOUVERED	B		36"	80"					
006	BI-FOLD WOOD SOLID FACE FLUSH	C		48"	80"					
007	SOLID CORE WOOD STYLE AND RAIL	A		36"	80"					
008	HOLLOW METAL DOOR AND FRAME ASSEMBLY			36"	80"					STYLE AND RAIL PROVIDE DOOR CLOSURE

FLOOR

CONC.	CONCRETE
CT	CARPET TILE
T	PORCELAIN 16"X16" TILE
HW	HARD WOOD

BASE

B-1	TILE
B-2	1X6 WITH ROUTED EDGES
VCB	VINYL COVE BASE
PNT	PAINTED FINISH

WALL

T	PORCELAIN TILE
CMU	CONCRETE MASONRY UNIT
CWB	CEMENT WALL BOARD
GWB	GYPSUM WALL BOARD
PNT	PAINTED FINISH
EMW	EXISTING MASONRY WALL

CEILING

GWB	GYPSUM BOARD
CONC.	CONCRETE
PNT.	PAINTED FINISH
ACT	ACOUSTIC CEILING TILE
E.S	EXPOSED STRUCTURE

WINDOW SCHEDULE

TYPE	DESCRIPTION	SIZE W x H	HEADER HEIGHT A.F.F.	MANUFATURER	GLASS TYPE	MATERIAL	COLOR	REMARKS
1	DOUBLE HUNG	6'-0" X 4'-6"				ALUMINUM	WHITE	INTEGRATED ROLL DOWN HURRICANE SHUTTER
2	DOUBLE HUNG	3'-0" X 4'-6"				ALUMINUM	WHITE	INTEGRATED ROLL DOWN HURRICANE SHUTTER
3	DOUBLE HUNG	2'-0" X 3'-0"				ALUMINUM	WHITE	INTEGRATED ROLL DOWN HURRICANE SHUTTER

NOTE:

1. ALL DIMENSIONS ARE NOMINAL, ACTUAL DIMENSIONS TO BE PROVIDED BY CONTRACTOR
2. CONTRACTOR SHALL PROVIDE ALL HARDWARE FOR WINDOWS COMPLETE WITH SCREENS.
3. THE CONTRACTOR SHALL PROVIDE ALL NECESSARY SHIMS NAILER OR BLOCKING REQUIRED AND SHALL VERIFY ALL WINDOW OPENING PRIOR TO ORDERING WINDOWS
4. CONTRACTOR SHALL VERIFY ALL WINDOW ROUGH OPENING REQUIREMENTS AS ROUGH OPENING MAY VARY BETWEEN MANUFACTURER
5. ALL GLASS USED SHALL BE LOW EMISSIVE DOUBLE GLAZING IMPACT RESISTANT
6. THE CONTRACTOR IS RESPONSIBLE FOR ALL MISCELLANEOUS AND REQUIRED WOOD FRAMING. BLOCKING. BUCKS. TRIM, CASING FOR THE PROPER INSTALLATIONS OF THE WINDOWS AND DOORS.

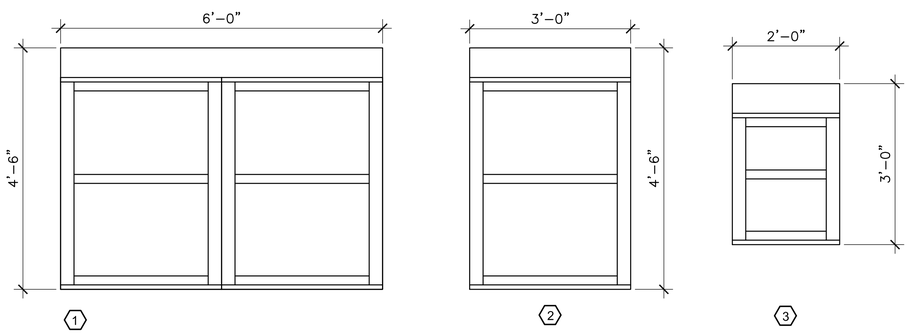

1 WINDOW ELEVATONS
A4.0 A4.0 SCALE: 3/4"=1'-0"

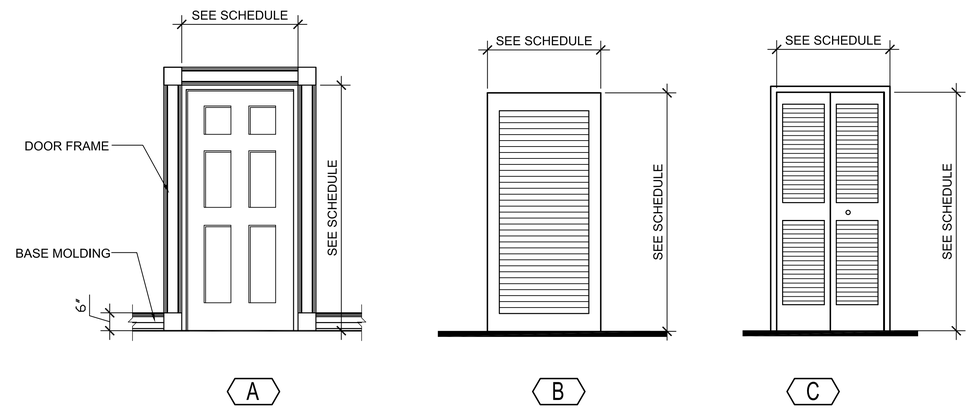

2 DOOR ELEVATIONS
A4.0 A4.0 SCALE: NOT TO SCALE

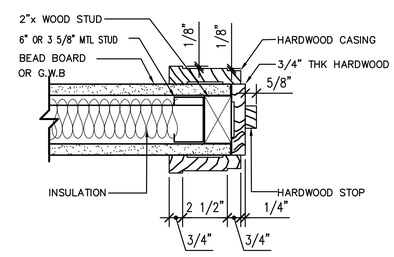

3 STUD FRAMED WALL DOOR JAMB DETAIL- INTERIOR
A4.0 A4.0 SCALE: 3"=1'-0"

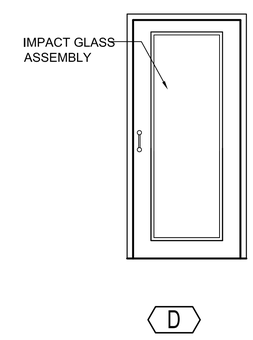

REVISIONS

NO:	DATE:	REMARKS

Government of the Virgin Islands
Department of Public Works
8244 Sub Base
St. Thomas, U.S.V.I 00802-5805
telephone: 340.776.4844
fax: 340.715.8135

Department of Public Works
Office Building
Second Floor Renovation
Parcel No. 6 Estate Susannaberg
St. John U.S.V.I 008030

DATE:	7/8/19
DRAWN BY:	KRB
CHECKED BY:	JM
APPROVED BY:	NMP
PROJECT NO.:	
CONTRACT NO.:	
SHEET NO.:	A4.0

SCHEDULES

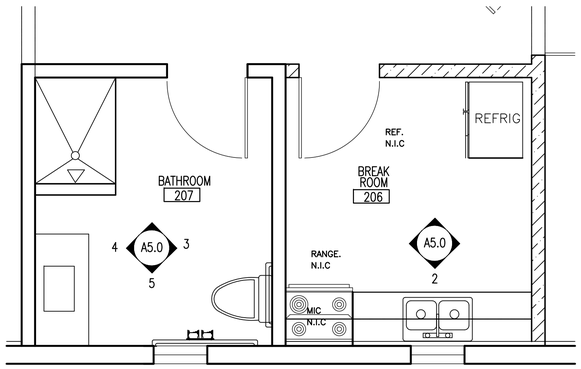

1 ENLARGED PLAN

A5.0 | A5.0 SCALE: 3/8" =1'-0"

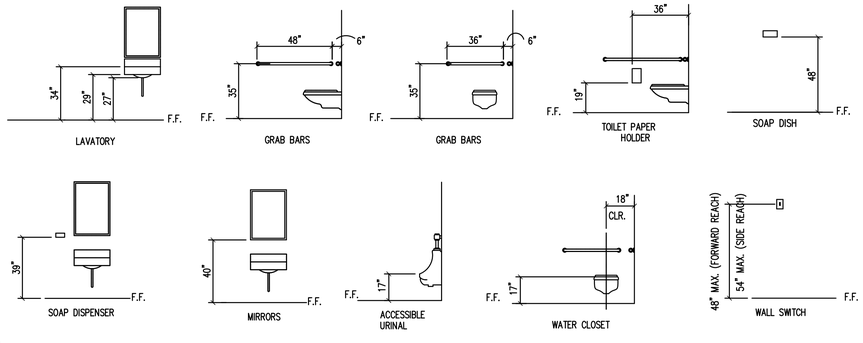

RESTROOM ACCESSORIES SCHEDULE

ITEM	DESCRIPTION	MANUFACTURER	MODEL NO.	FINISH	REMARKS
1	GRAB BAR			STAINLESS STEEL	
2	MIRROR WITH WOOD TRIM				
3	TOWEL DISPENSER	BOBRICK		STAINLESS STEEL	
4	SOAP DISPENSER	BOBRICK		STAINLESS STEEL	
5	TOILET PAPER HOLDER	BOBRICK		STAINLESS STEEL	
6	PROTECTIVE PIPE COVER				
7	UNDER-MOUNT SINK				

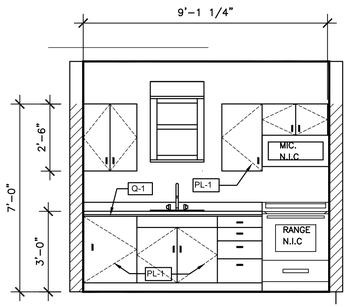

LEGEND

P-1	PLASTIC LAMINATE
Q-1	QUART TOP

CONTRACTOR SHALL PROVIDE CASEWORK SHOP DRAWINGS FOR APPROVAL PRIOR TO THE FABRICATION OF THE CABINETS

2 KITCHENNETE ELEVATION

A5.0 | A5.0 SCALE: 3/8" =1'-0"

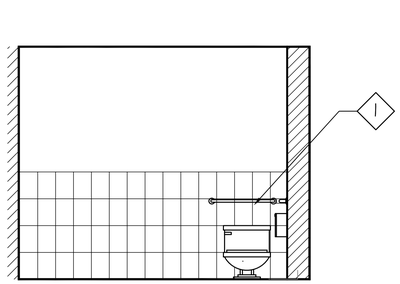

3 BATHROOM INTERIOR ELEVATION

A5.0 | A5.0 SCALE: 3/8" =1'-0"

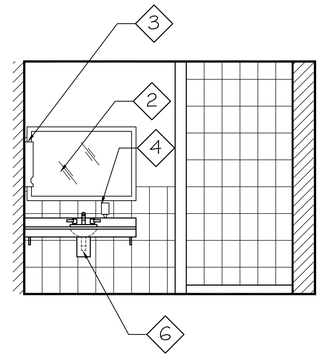

4 BATHROOM INTERIOR ELEVATION

A5.0 | A5.0 SCALE: 3/8" =1'-0"

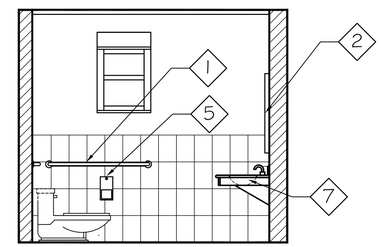

5 BATHROOM INTERIOR ELEVATION

A5.0 | A5.0 SCALE: 3/8" =1'-0"

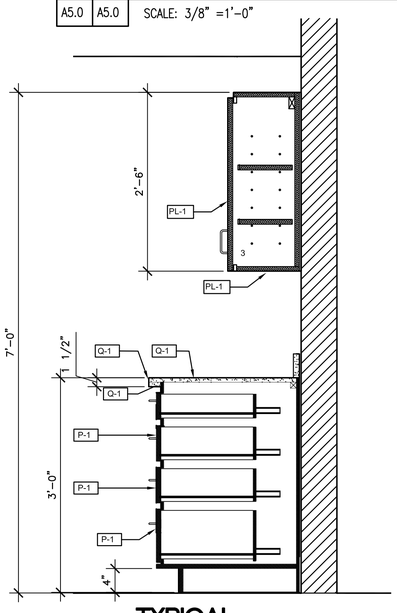

6 TYPICAL CASEWORK SECTION

A5.0 | A5.0 SCALE: 3/8" =1'-0"

REVISIONS

NO:	DATE:	REMARKS

Government of the Virgin Islands
Department of Public Works
8244 Sub Base
St. Thomas, U.S.V.I 00802-5805
telephone: 340.776.4844
fax: 340.715.8135

Department of Public Works
Office Building
Second Floor Renovation
Parcel No. 6 Estate Susannaberg
St. John U.S.V.I 008030

DATE:	7/8/19
DRAWN BY:	KRB
CHECKED BY:	JM
APPROVED BY:	NMP

PROJECT NO.:

CONTRACT NO.:

SHEET NO.: A5.0

DETAILS

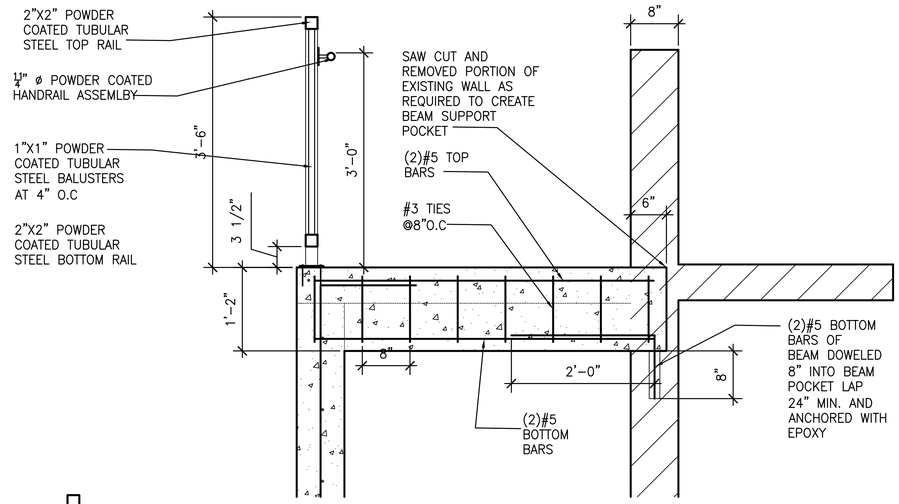

1 BEAM DETAIL AT POCKET

S1.0 | S1.0 SCALE: 1/4" =1'-0"

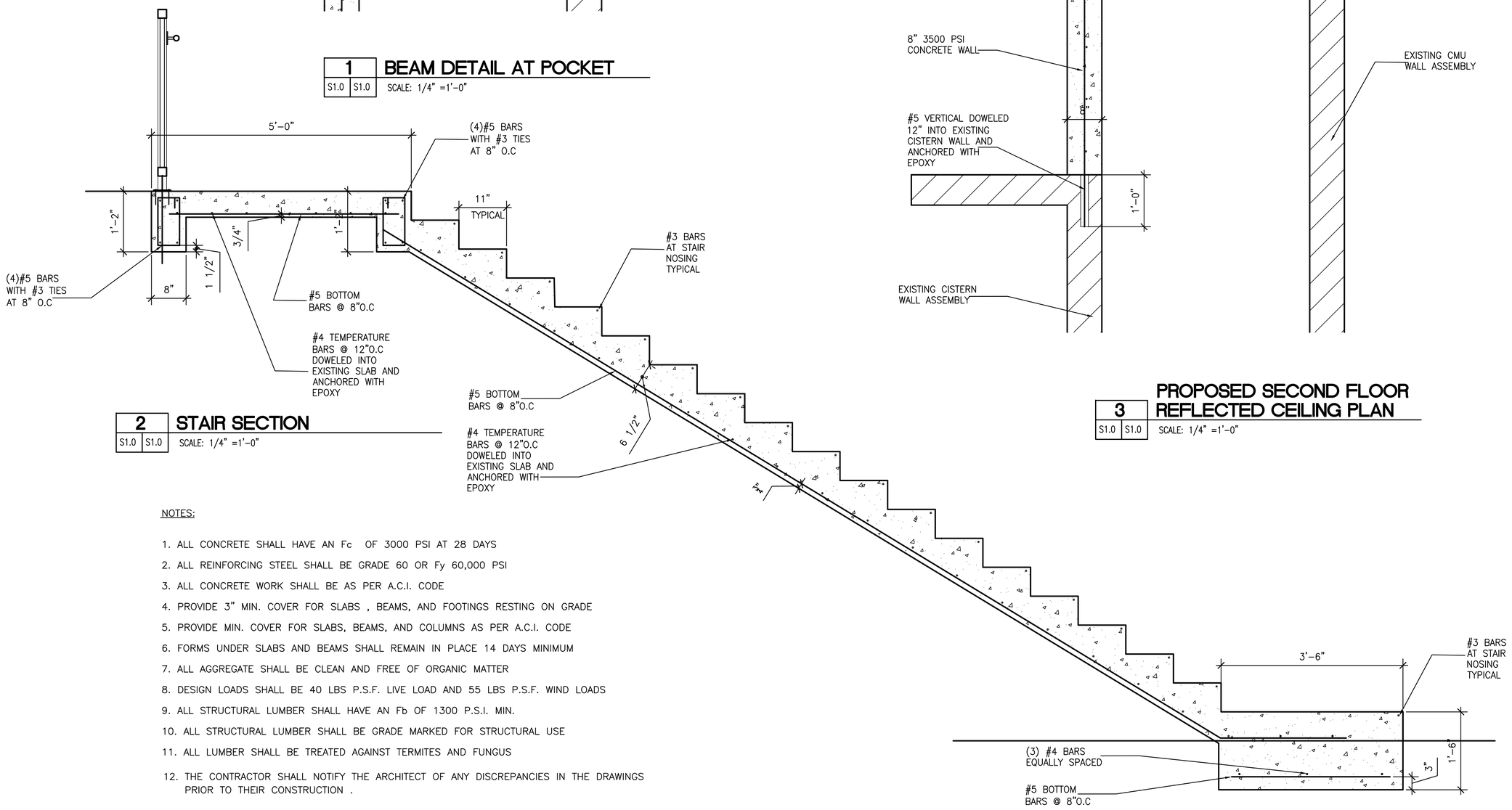

2 STAIR SECTION

S1.0 | S1.0 SCALE: 1/4" =1'-0"

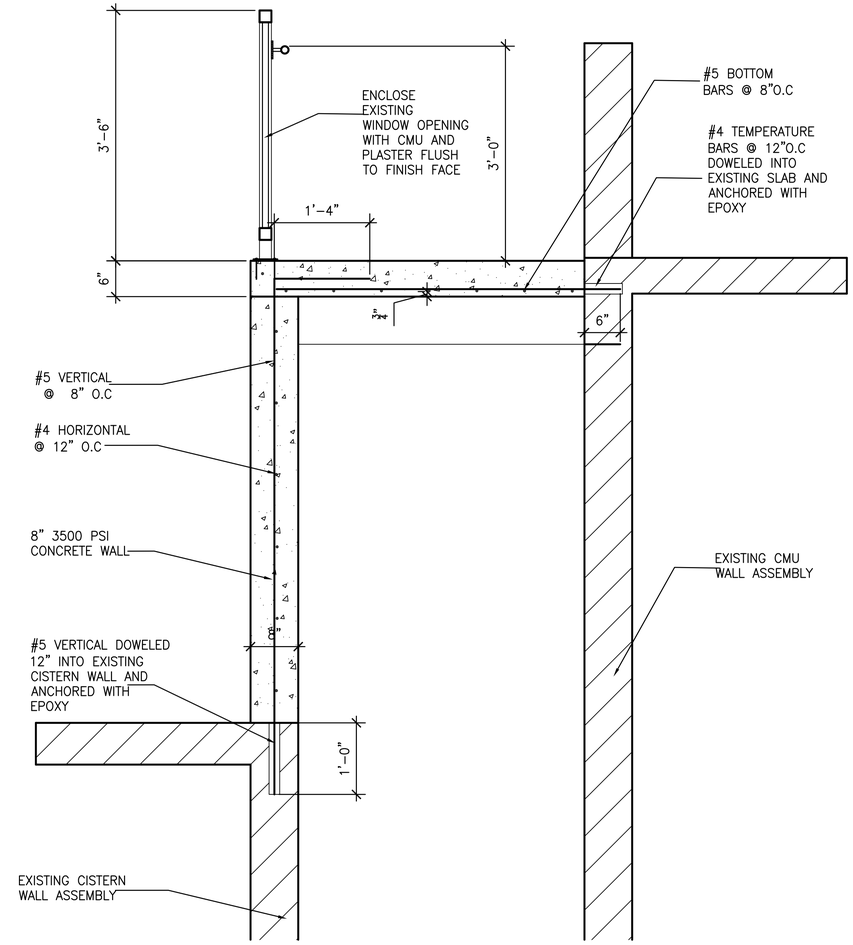

3 PROPOSED SECOND FLOOR REFLECTED CEILING PLAN

S1.0 | S1.0 SCALE: 1/4" =1'-0"

NOTES:

1. ALL CONCRETE SHALL HAVE AN Fc OF 3000 PSI AT 28 DAYS
2. ALL REINFORCING STEEL SHALL BE GRADE 60 OR Fy 60,000 PSI
3. ALL CONCRETE WORK SHALL BE AS PER A.C.I. CODE
4. PROVIDE 3" MIN. COVER FOR SLABS , BEAMS, AND FOOTINGS RESTING ON GRADE
5. PROVIDE MIN. COVER FOR SLABS, BEAMS, AND COLUMNS AS PER A.C.I. CODE
6. FORMS UNDER SLABS AND BEAMS SHALL REMAIN IN PLACE 14 DAYS MINIMUM
7. ALL AGGREGATE SHALL BE CLEAN AND FREE OF ORGANIC MATTER
8. DESIGN LOADS SHALL BE 40 LBS P.S.F. LIVE LOAD AND 55 LBS P.S.F. WIND LOADS
9. ALL STRUCTURAL LUMBER SHALL HAVE AN Fb OF 1300 P.S.I. MIN.
10. ALL STRUCTURAL LUMBER SHALL BE GRADE MARKED FOR STRUCTURAL USE
11. ALL LUMBER SHALL BE TREATED AGAINST TERMITES AND FUNGUS
12. THE CONTRACTOR SHALL NOTIFY THE ARCHITECT OF ANY DISCREPANCIES IN THE DRAWINGS PRIOR TO THEIR CONSTRUCTION .

REVISIONS

NO:	DATE:	REMARKS

Government of the Virgin Islands
Department of Public Works
8244 Sub Base
St. Thomas, U.S.V.I 00802-5805
telephone: 340.776.4844
fax: 340.715.8135

Department of Public Works
Office Building
Second Floor Renovation
Parcel No. 6 Estate Susannaberg
St. John U.S.V.I 008030

DATE:	7/8/19
DRAWN BY:	KRB
CHECKED BY:	JM
APPROVED BY:	NMP

PROJECT NO.:

CONTRACT NO.:

SHEET NO.:

S1.0

STAIR SECTIONS

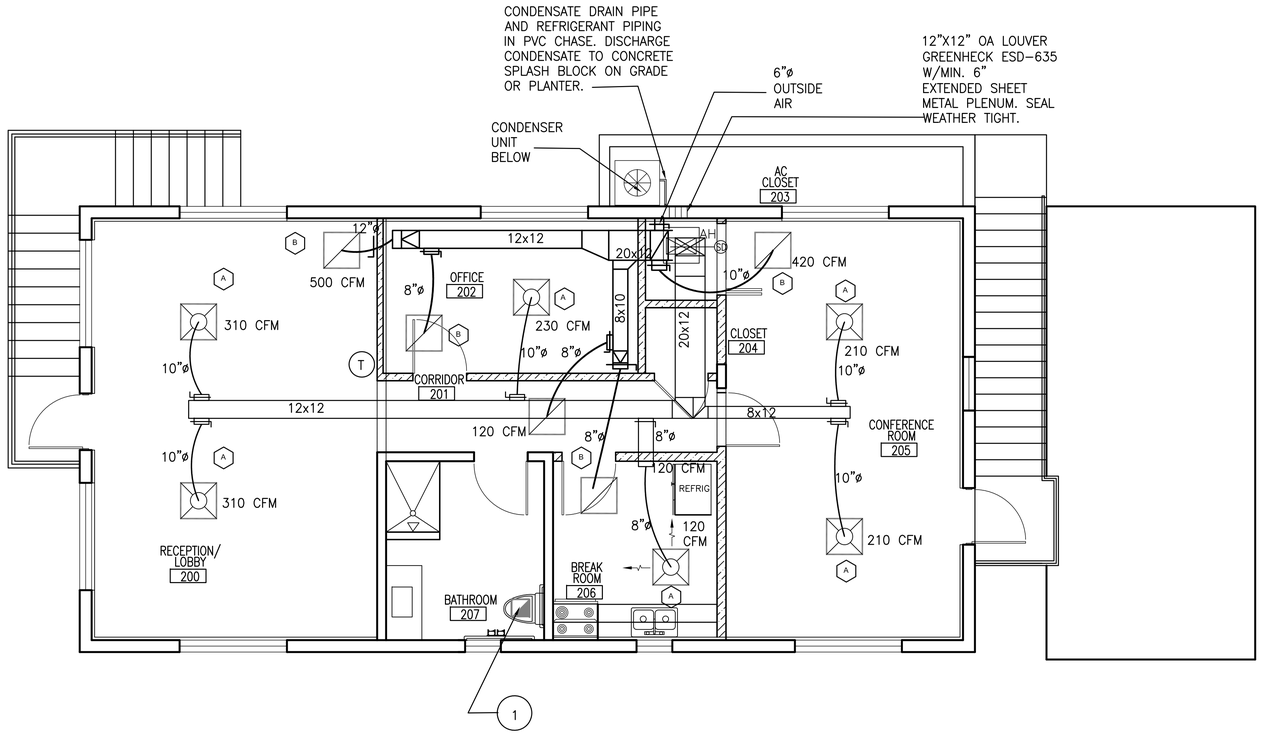

N

PROPOSED SECOND FLOOR HVAC PLAN

1	
M1.0	M1.0

SCALE: 1/4" =1'-0"

KEY NOTES

1 — CEILING MOUNTED EXHAUST FAN. GREENHECK MODEL SP-A50-90VG. 6" ø DUCT UP TO 4" ø PVC GOOSE NECK THROUGH ROOF . INCLUDE BIRD SCREEN, DISCONNECT SWITCH AND BACKDRAFT DAMPER. INSTALL RUBBER FLASHING BOOT AS REQUIRED. FAN SHALL RUN DURING OCCUPIED TIME SCHEDULE. FAN SHALL BE CONTROLLED THROUGH TIME CLOCK(365DAY/24HR.) OR INTERLOCKED WITH PROGRAMMABLE T-STAT.

A — 24"X24" LAY-IN, 18"X18" FACE. MODEL TDC-AA LAY-IN CEILING DIFFUSER BY TITUS OR APPROVED EQUAL

B — 24"X24" LAY CEILING AC RETURN AIR GRILLE 50F EGGCRATE BY TITUS OR APPROVED EQUAL

AIR COOLED SPLIT A/C UNIT SCHEDULE

AIR HANDLING UNIT		UNIT DESIGNATION	AHU-1
		AREA SERVED	2ND FLOOR
		LOCATION	A/C CLOSET
		OPERATING WEIGHT LBS	153
		DESIGN MANUFACTURER	TRANE
		MODEL NUMBER	GAM5B0C42M31SB
	FAN	TOTAL AIR CFM	1,391
		VENTAIR CFM	90
		EXTERNAL STATIC PRESSURE IN. OF H2O	0.4
		FAN MOTOR HP (NON-OVERLOAD)	1/2
		ELECTRICAL SERVICE AVAILABLE	240V-1ø-60Hz
		UNIT FLA	4.1
	FILTER	TYPE AND THICHNESS	MERV 7/1"
AIR COOLED CONDENSING UNIT		UNIT DESIGNATION	CU-1
		TOTAL CAPACITY BTU/HR	42,000
		TYPE OF FAN	PROPELLER
		No OF COMPRESSORS	1
		ELECTRICAL SERVICE AVAILABLE	240V-1ø-60Hz
		UNIT MCA/MFS	21/35
		OPERATING WEIGHT LBS	252
		DESIGN MANUFACTURER MODEL No	4TTR6042J1000A
		SEER (MINIMUM)	16.0
		REFRIGERANT	R-410A

NOTES:

1. REFRIGERANT LINES SHALL BE INSTALLED AND SIZED IN STRICT ACCORDANCE TO INSTALLED EQUIPMENT MANUFACTURER'S RECOMMENDATIONS. CONTRACTOR SHALL BE RESPONSIBLE FOR PROPER REFRIGERANT LINE SIZING AND ACTUAL DEVELOPED LENGTHS.
2. ALL AIR HANDLING UNITS SHALL BE PROVIDED WITH A FLOAT SWITCH ("WET SWITCH") WIRED TO SHUT DOWN UNIT UPON FAILURE OF PRIMARY CONDENSATE DRAIN AND/OR OVERFLOW.
3. 5 YEARS COMPRESSOR WARRANTY.
4. SYSTEMS SHALL BE PROVIDED WITH 7-DAY, COOL PROGRAMMABLE THERMOSTATS. UNIT SHALL BE PROGRAMMED TO OPERATE AS FOLLOWS:
   OCCUPIED M-F 7AM-5PM: FAN ON, COOLING SETPOINT 74°F
   UNOCCUPIED: FAN AUTO, COOLING SETPOINT 78°F
5. CONDENSING UNIT COIL SHALL BE PROVIDED WITH COATING PROTECTION.

HVAC GENERAL NOTES

1. THE WORK THAT IS TO BE DONE UNDER THIS HEADING INCLUDES THE FURNISHING OF ALL LABOR, MATERIALS AND EQUIPMENT, PERMITS, FEES, INSPECTIONS,TESTS, INSURANCE, ETC. REQUIRED FOR THE OMPLETION OF THE AIR CONDITIONING SYSTEM SHOWN ON DRAWINGS AND/OR LISTED BELOW.
2. CONTRACTOR SHALL VERIFY SPACE CONDITIONS AND DIMENSIONS AND SHALL COORDINATE WORK WITH ALL OTHER TRADES AT JOBSITE PRIOR TO FABRICATION AND INSTALLATION OF DUCTWORK.
3. ALL WORK SHALL BE COORDINATED WITH OTHER TRADES TO AVOID INTERFERENCE WITH PROGRESS OF CONSTRUCTION AND IN STRICT COMPLIANCE WITH ALL APPLICABLE CODES AND STANDARDS.
4. ALL WORK SHALL BE DONE IN ACCORDANCE WITH THE LATEST EDITION OF THE INTERNATIONAL BUILDING CODE AND ALL LOCAL CODES AND ORDINANCES.
5. WARRANTY
   1. FULLY WARRANT ALL MATERIALS, EQUIPMENT AND WORKMANSHIP FOR ONE (1) YEAR FROM DATE OF ACCEPTANCE.
   2. EXTEND ALL MANUFACTURER'S WARRANTIES TO OWNER, INCLUDING EXTENDED WARRANTIES ON HVAC EQUIPMENT. FIVE (5) YEAR COMPRESSOR (MATERIAL ONLY).
6. CONTRACTOR SHALL COORDINATE ALL BUILDING STANDARD REQUIREMENTS PRIOR TO BID.
7. SUBMIT SHOP DRAWINGS OF ALL MATERIALS AND EQUIPMENT FOR APPROVAL PRIOR TO PURCHASE OR FABRICATION.
8. ALL DUCT SIZES SHOWN ON DRAWINGS ARE CLEAR INSIDE DIMENSIONS.
9. AIR DISTRIBUTION SHALL BE AS SCHEDULED ON THE DRAWINGS OR APPROVED EQUAL.
10. DUCTWORK
    1. FABRICATE AND ERECT ALL DUCTWORK IN ACCORDANCE TO ASHRAE AND SMACNA HVAC DUCT CONSTRUCTION STANDARDS (METAL AND FLEXIBLE) AND SMACNA FIBROUS GLASS DUCT CONSTRUCTION STANDARDS. COMPLY WITH NFPA BULLETIN 90A REQUIREMENTS.
    2. SHEETMETAL DUCTWORK AND FITTINGS SHALL BE SMACNA LOW PRESSURE CONSTRUCTION WITH SEAL CLASS B SEAMS AND JOINTS. INCLUDE DOUBLE-THICKNESS TURNING VANES, MANUAL DAMPERS, FLEXIBLE CONNECTORS, ACOUSTIC LINING, AND OTHER SHEET METAL ACCESSORIES FOR THE PROJECT. VOLUME DAMPERS TO BE OF OPPOSED BLADE CONSTRUCTION. ALL BRANCH CONNECTION SHEETMETAL RECTANGULAR DUCTWORK SHALL BE 45 DEGREE TAP TAKE-OFF FITTINGS.
    3. FIBERGLASS DUCTWORK AND FITTINGS SHALL BE FABRICATED OF 1-1/2" INCH THICK STANDARD DUTY FIBERGLASS BOARD WITH REINFORCED FLAMEPROOF ALUMINUM FOIL FACED COVERING. MIN. R-VALUE 6.0. ALL 90 DEGREE ELBOWS SHALL BE MULTIGORE OR VANED MITERED ELBOWS.
    4. FLEXIBLE DUCTS SHALL BE INDEPENDENTLY SUPPORTED FROM THE STRUCTURE AND CONNECTED WITH PLASTIC DRAW BANDS TIGHTENED WITH MANUFACTURER'S TOOLS. TAKE-OFFS FROM RIGID DUCTWORK TO BE SPIN-IN FITTINGS PROVIDED WITH TWIST RINGS, BUTTERFLY DAMPERS, QUADRANT OPERATORS AND INSULATION GUARD. FLEXIBLE DUCTS SHALL BE LIMITED TO A MAXIMUM OF 10'-0" STRAIGHT LENGTHS PER RUNOUT. FLEXIBLE DUCTS SHALL BE ATCO RUBBER 070 OR EQUAL, 1-1/2" THICK INSULATION WITH A MIN. R-VALUE OF 6.0 AND RATED AT 10" W.C. FOR SIZES THROUGH 12". FLEXIBLE DUCTS SHALL BE U.L. LISTED AND MEET 25/50 FLAME AND SMOKE TEST IN ACCORDANCE WITH NFPA 255. FLEXIBLE DUCTS ARE NOT PERMITTED IN ROOMS WITHOUT CEILINGS.
11. CHECK, TEST, START, ADJUST, BALANCE AND INSTRUCTIONS
    1. AFTER INSTALLATION, SERVICING AND EQUIPMENT IS OPERATIONAL, CHECK ALL EQUIPMENT AND PERFORM START UP IN ACCORDANCE WITH THE MANUFACTURER'S INSTRUCTIONS.
    2. PRESSURE TEST ALL REFRIGERANT HIGH SIDE PIPING TO 275 PSIG, HOLD FOR 25 HOURS. LOW SIDE TO 150 PSIG, HOLD FOR 24 HOURS. AFTER TESTING, EVACUATE SYSTEM TO 28 INCHES OF MERCURY GAUGE PRESSURE WITH VACUUM PUMP. HOLD FOR 24 HOURS WITH PUMP OFF. BREAK VACUUM WITH OPERATING REFRIGERANT.
    3. BALANCE AIR SYSTEM TO DELIVER AIR QUANTITIES AT EACH OUTLET WITHIN 10% USING AABC TESTS AND PROCEDURES.
    4. TAG ALL EQUIPMENT, SWITCHES AND CONTROLS WITH PERMANENT LABELS.
12. REFRIGERANT PIPING SHALL BE TYPE L HARD OR SOFT DRAWN, COPPER TUBING, CLEANED AND DEHYDRATED FOR REFRIGERANT USE. SIZES AS PER AIR CONDITIONING EQUIPMENT MANUFACTURER'S RECOMMENDATIONS. REFRIGERANT SUCTION PIPING SHALL BE INSULATED WITH 1/2" THICK FOAMED RUBBER INSULATION, FIRE RETARDANT TYPE. INSULATION SHALL BE INSTALLED ON PIPING BEFORE ASSEMBLY. NO SPLIT INSULATION WILL BE ACCEPTABLE. SEAL JOINTS IN ACCORDANCE WITH MANUFACTURER'S RECOMMENDATIONS.
13. CONTRACTOR SHALL PROVIDE "RED LINE" AS-BUILT DRAWINGS AND BALANCING REPORT.

REVISIONS

NO:	DATE:	REMARKS

Government of the Virgin Islands
Department of Public Works
8244 Sub Base
St. Thomas, U.S.V.I 00802-5805
telephone: 340.776.4844
fax: 340.715.8135

Department of Public Works
Office Building
Second Floor Renovation
Parcel No. 6 Estate Susannaberg
St. John U.S.V.I 008030

DATE: 7/8/19
DRAWN BY: KRB
CHECKED BY: JM
APPROVED BY: NMP

PROJECT NO.:
CONTRACT NO.:

SHEET NO.:
M1.0

HVAC PLAN

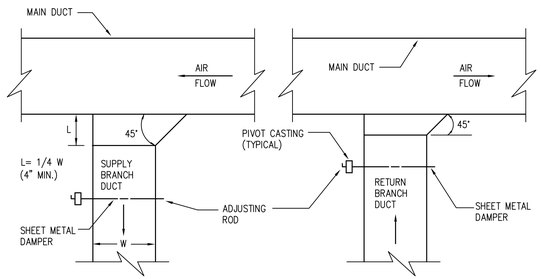

TYPICAL DUCT BRANCH TAKE OFF DETAIL FOR LOW PRESSURE DUCTWORK

1 / M2.0 N.T.S

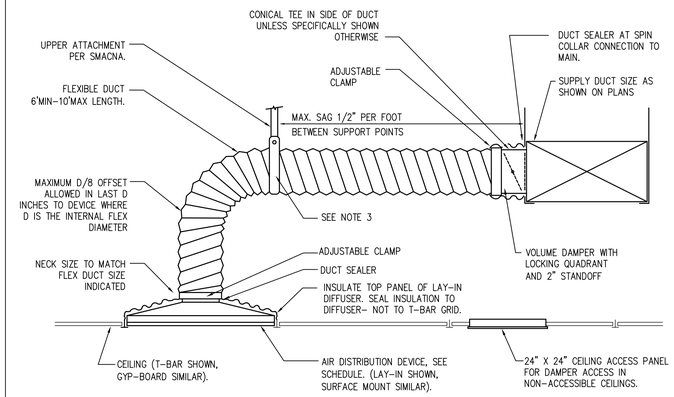

FLEXIBLE DUCT NOTES

1. FLEXIBLE DUCTS SHALL BE ONE–PIECE AND SHALL NOT BE SPLICED TOGETHER.
2. EXTEND FLEXIBLE DUCT INSULATION TO DUCT/DIFFUSER PANEL INSULATION AND SEAL WITH MASTIC.
3. MINIMUM 1 1/2" WIDE 22 GALVANIZED STRAP HANGER WITH HEMMED EDGES PER SMACNA, FIGURE 3–10.
4. FLEXIBLE AIR DUCT SHALL BE FULLY EXTENDED AND NOT COMPRESSED WITH ELBOW RADIUS NO LESS THAN R/D = 1.0.

FLEXIBLE DUCT DETAIL

3 / M2.0 N.T.S

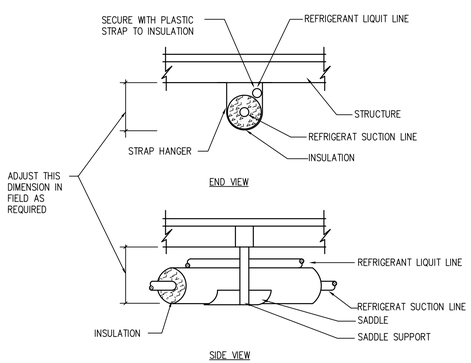

NOTES:
1– PROVIDE ISOLATION BETWEEN DISSIMILAR METALS
2– PROVIDE SADDLE PROTECTION AT EACH SUPPORT

TYPICAL REFRIGERANT PIPING HANGER DETAIL

2 / M2.0 N.T.S

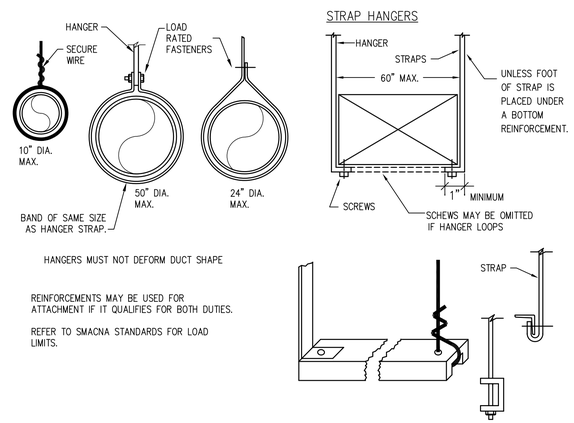

HANGERS MUST NOT DEFORM DUCT SHAPE

REINFORCEMENTS MAY BE USED FOR ATTACHMENT IF IT QUALIFIES FOR BOTH DUTIES.

REFER TO SMACNA STANDARDS FOR LOAD LIMITS.

TYPICAL DUCT HANGER DETAIL

4 / M2.0 N.T.S

REVISIONS		
NO:	DATE:	REMARKS

Government of the Virgin Islands
Department of Public Works
8244 Sub Base
St. Thomas, U.S.V.I 008802-5805
telephone: 340.776.4844
fax: 340.715.8135

Department of Public Works
Office Building
Second Floor Renovation
Parcel No. 6 Estate Susannaberg
St. John U.S.V.I 008030

DATE:	7/8/19
DRAWN BY:	KRB
CHECKED BY:	JM
APPROVED BY:	NMP

PROJECT NO.:

CONTRACT NO.:

SHEET NO.: M2.0

DETAILS

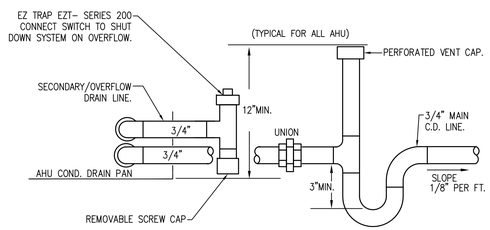

COMPLIES WITH FBC–2007 MECH VOL SECTION 307.2.3

AHU CONDENSATE DRAIN LINE W/AUX. OVERFLOW SWITCH DETAIL

1 / M2.1 N.T.S

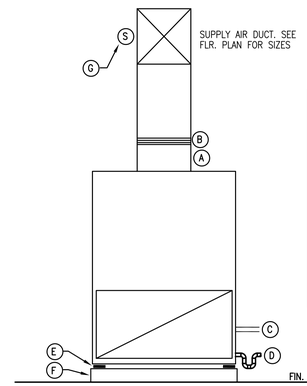

REFERENCE NOTES

- (A) AHU HEAT SECTION. NOT APPLICABLE
- (B) DUCT FLEXIBLE CONNECTION.
- (C) REFRIGERANT PIPING
- (D) CONDENSATE DRAIN LINE & TRAP (REFER TO PLBG. DWGS.)
- (E) VIBRATION ISOLATOR PAD (TYP.)
- (F) SUB BASE
- (G) 4 INCH HIGH REINFORCED CONCRETE PAD
- (H) DUCT SMOKE DETECTOR

TYPICAL AIR HANDLING UNIT MOUNTING DETAIL

3 / M2.1 N.T.S

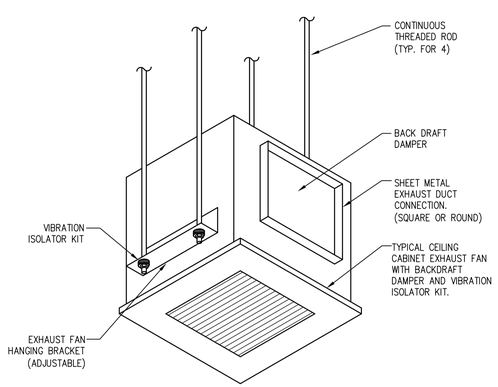

NOTE:
IF FAN IS SUPPORTED FROM HORIZONTAL JOISTS, NEOPRENE PADS MUST BE PROVIDED AT ALL CONNECTION POINTS IN ORDER TO AVOID NOISE PROPAGATION.

CEILING MOUNTED CABINET EXHAUST FAN DETAIL

2 / M2.1 N.T.S

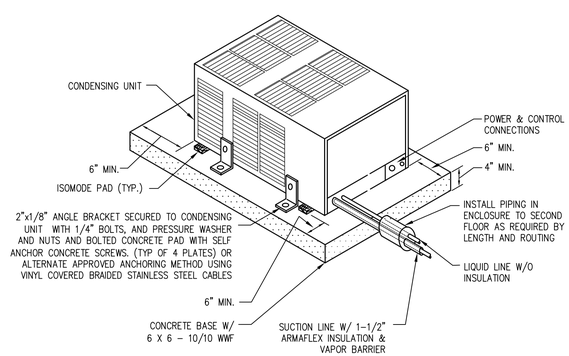

NOTE:
ALL HARDWARE TO BE GALV. OR CADMIUM PLATED FORGED STEEL ASTM–A–325.

CONDENSING UNIT MOUNTING DETAIL

4 / M2.1 N.T.S

REVISIONS

NO:	DATE:	REMARKS

Government of the Virgin Islands
Department of Public Works
8244 Sub Base
St. Thomas, U.S.V.I 00802-5805
telephone: 340.776.4844
fax: 340.715.8135

Department of Public Works
Office Building
Second Floor Renovation
Parcel No. 6 Estate Susannaberg
St. John U.S.V.I 008030

DATE:	7/8/19
DRAWN BY:	KRB
CHECKED BY:	JM
APPROVED BY:	NMP

PROJECT NO.:

CONTRACT NO.:

SHEET NO.: M2.1

DETAILS

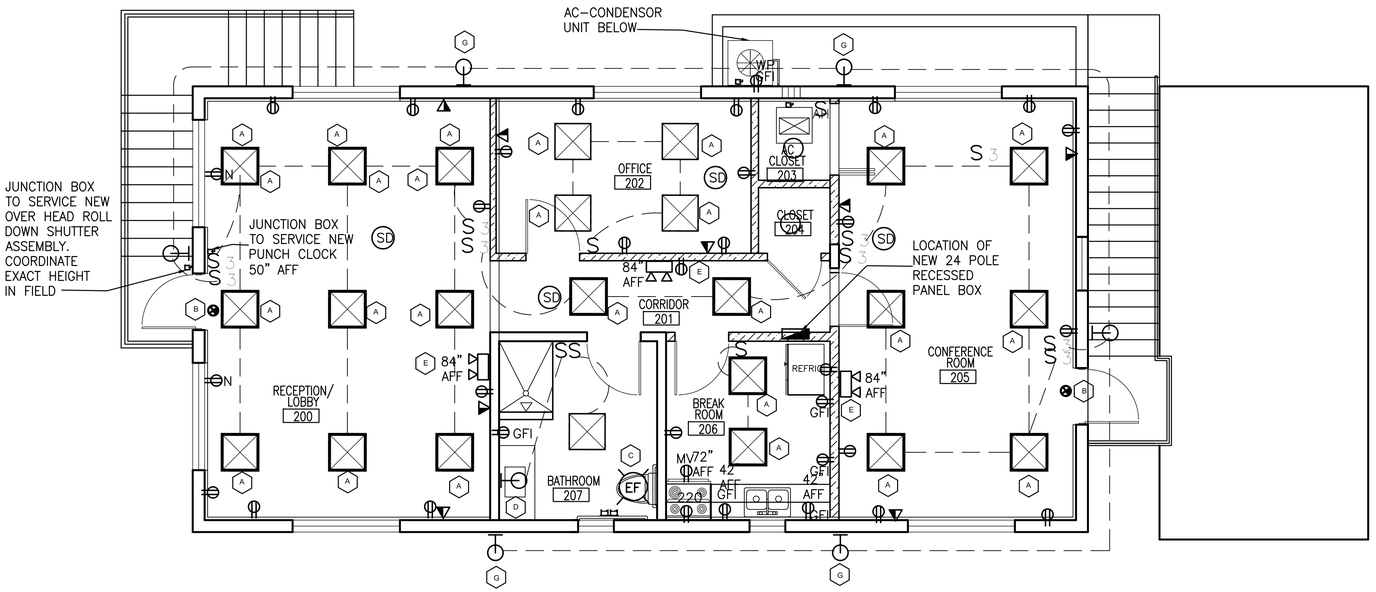

N

PROPOSED SECOND POWER AND LIGHTING PLAN

1	
E1.0	E1.0

SCALE: 1/4" =1'-0"

ELECTRICAL SYMBOL LEGEND

- WALL OR CEILING MOUNTED EXIT LIGHT FIXTURE WITH BATTERY BACK-UP. ARROWS, NUMBER OF FACES AND MOUNTING AS REQUIRED TO INDICATE A CLEAN PATH TO EXIT.
- $ — 120/277 V., 20 AMP., SINGLE POLE LIGHT SWITCH.
- $ 3 — 120/277V., 20 AMP., THREE WAY SWITCH.
- ELECTRICAL PANEL
- FUSED DISCONNECT SWITCH SIZED PER EQUIPMENT NAMEPLATE.
- MAGNETIC MOTOR STARTER, PROVIDED BY MECHANICAL CONTRACTOR, INSTALLED BY ELECTRICAL CONTRACTOR.
- ELECTRIC MOTOR.
- EQUIPMENT CONNECTION WITH FLEXIBLE CONDUIT.
- 20A., 120 V., QUADRUPLEX RECEPTACLE, TWO DUPLEX IN TWO BOX. 18" A.F.F.
- 20 A., 120., V., DUPLEX RECEPTACLE, GROUNDING TYPE, U.O.N. MOUNTED 18" A.F.F.
- GFI — 20 A., 120., V., DUPLEX RECEPTACLE, GROUND FAULT INTERUPTER
- TELEPHONE/DATA OUTLET IN 4"X 4" BOX
- T.V. — CABLE TV OUTLET
- J — CEILING OR WALL MOUNTED JUNCTION BOX.

GENERAL ELECTRICAL NOTES

1. ALL WORK SHALL BE IN ACCORDANCE WITH NATIONAL ELECTRICAL CODE, FLORIDA BUILDING CODE AND OTHER APPLICABLE CODES AND STANDARDS.
2. a) THE DRAWINGS ARE DIAGRAMMATIC AND DO NOT SHOW ALL OFFSETS, BENDS AND BOXES REQUIRED TO MAKE A COMPLETE NEAT INSTALLATION IN ACCORDANCE WITH N.E.C.
   b) WHEN CONFLICTS ARISE IN LOCATIONS WIRING DEVICES, ELECTRICAL EQUIPMENT, DISCONNECTS, PANELBOARDS, ETC. DUE TO FIELD CONDITION OR IMPROPER FIELD COORDINATION CONTRACTOR SHALL BRING IT TO THE A/E'S ATTENTION AND AT NO EXTRA COST RELOCATE, AND OR EXTEND WITHIN A REASONABLE DISTANCE SUCH ITEM WHICH IS IN CONFLICT. THE CONTRACTOR IS RESPONSIBLE FOR COORDINATING LOCATION OF ALL COMPONENTS PRIOR TO ROUGH IN WITH ALL TRADES NO EXTRAS WILL BE ALLOWED FOR FAILURE TO DO SO.
3. THE CONTRACTOR IS RESPONSIBLE FOR EVALUATING FIELD CONDITIONS BY VISITING THE SITE PRIOR TO COMMENCING / BIDDING WORK.
4. ALL DEVICE BOXES SHALL BE INSTALLED FLUSH AND CONDUITS RUN CONCEALED IN FINISHED AREAS EXCEPT AS SPECIFICALLY SHOWN/NOTED OTHERWISE.
5. INSTALL POWER AND CONTROL WIRING AND REQUIRED CONTROL COMPONENTS FOR AIR CONDITIONING SYSTEM AS SHOWN/NOTED ON THESE DRAWINGS AND PER OTHER APPLICBLE DRAWINGS / INSTRUCTIONS. SEE AIR CONDITIONING DRAWING.
6. ALL MATERIAL REMOVED SHALL BE DISPOSED OF AS DIRECTED BY OWNER.
7. ALL WIRING INDICATED AS EXISTING IS BASED ON ORIGINAL CONTRACT DRAWINGS AND IS TO BE VERIFIED BY CONTRACTOR AT JOB SITE.
8. MINIMUM WIRE SIZE SHALL BE # 12 THHN / THWN UNLESS OTHERWISE NOTED ON PLANS.
9. ALL CONDUCTORS SHALL BE COPPER.
10. ALL MATERIALS SHALL BE U.L. APPROVED.
11. NEW TYPEWRITTEN PANEL TALLY SHALL BE FURNISHED AFTER JOB IS COMPLETED.
12. ALL BRANCH CIRCUITS SHALL BE PROPERLY PHASE BALANCED.
13. ALL NON POWER RELATED WIRING IN CEILING AIR CONDITIONING PLENUM RUNNING WITHOUT CONDUIT SHALL BE TEFLON COATED CLASSIFIED FOR USE IN PLENUMS.
14. ALL BRANCH CIRCUITS TO HAVE A GREEN EQUIPMENT GROUNDING CONDUCTOR SIZED AS PER N.E.C. 250.122.
15. ALL EMPTY CONDUITS TO BE PROVIDED WITH NYLON PULL STRINGS.
16. FUSES SHALL BE DUAL ELEMENT, TIME DELAY TYPE UNLESS OTHERWISE NOTED.
17. A/C EQUIPMENT WIRING, BREAKER AND FUSE SIZES ARE BASED ON A/C EQUIPMENT SPECIFIED ON CONTRACT DRAWING. CONTRACTOR IS RESPONSIBLE FOR PROVIDING ALL WIRING, BREAKER AND FUSES SIZES IN ACCORDANCE WITH A/C EQUIPMENT NAMEPLATE REQUIREMENTS IF DIFFERENT FROM THAT SPECIFIED ON DRAWINGS, AS WELL AS ANY FEEDER CHANGES BEING AFFECTED BY THIS CHANGE CONTRACTOR SHALL MAKE ABOVE MENTIONED CHANGES AT NO EXTRA COST.
18. CONTACTOR SHALL COORDINATE ALL HIS WORK WITH OTHER TRADES IN ORDER TO FURNISH AND INSTALL ALL CONTROL WIRING AND RACEWAYS, ALL POWER CONTROL CIRCUIT WIRING AND RACEWAY AS SHOWN ON THE AIR CONDITIONING DRAWING OR SPECIFICATIONS. IF AIR CONDITIONG DRAWING REFER TO MANUFACTURER ALL REQUIREMENT AND INCLUDE ALL RELATED WORK IN HAS CONTACT.
19. ALL LUMINARIES SHALL BE PROPERLY SUPPORTED IN ACCORDANCE WITH THE CEILING SYSTEM MANUFACTURER RECOMMENDATIONS AND LOCAL CODE REQUIREMENTS.
20. RISERS ARE DIAGRAMMATIC ONLY. THEY DO NOT SHOW EVERY BEND REQUIRED FOR THE INSTALLATION.
21. THIS DRAWING IS A GUIDE FOR THE ELECTRICAL INSTALLTION. THE ELECTRICAL CONTRACTOR IS RESPONSIBLE TO PROVIDE A FUNCTIONING SYSTEM.
22. ALL CABLES SHALL BE RUN WITH OUT SPLICES EXCEPT IF OTHERWISE INDICATED.
23. ALL PULL AND JUNCTION BOXES SHAL BE ACCESSIBLE AT ALL TIMES.
24. EXACT POINT AND METHODS OF CONNECTION SHALL BE DETERMINED IN FIELD.
25. ALL WORK SHALL BE DONE IN A NEAT AND WORKMANLIKE MANNER.
25. ALL RACEWAY ROUTED, INSULATED CONDUCTORS SYSTEM SHALL BE COLOR CODED AS FOLLOWS:

	120/240 V SYSTEM
PHASE 'A'	BLACK
PHASE 'B'	RED
NEUTRAL	WHITE
GROUND	GREEN

26. THE CONTRACTOR SHALL TIE NEW SECOND FLOOR PANEL BOX TO THE EXISTING STAND BYE GENERATOR ON SITE. THE SYSTEM SHALL BE COMPLETE AND WILL INCLUDE ALL REQUIRED, CONDUITS, WIRING EXCAVATION OF NEW BURIED CONDUIT IF REQUIRED. THE CONTRACTOR IS RESPONSIBLE FOR PROVIDING AND INSTALLING A SECONDARY AUTOMATIC TRANSFER SWITCH IF REQUIRED.

LIGHTING FIXTURE SCHEDULE

TYPE	Description	Lamp	Lumens	MANUFACTURER	LLF
A	2X2 LED RECESSED TROFFER LIGHT FIXTURE			TCP , LITHONIA OR APPROVED EQUAL	
B	THERMOPLASTIC LED EXIT LIGHT EMERGENCY BATTERY BACK UP			HONEY WELL, LITHONIA OR APPROVED EQUAL	
C	EXHAUST FAN				
D	DECORATIVE WALL SCONCE				
E	DUAL HEAD EMERGENCY LIGHT WITH BATTERY BACK UP			HONEY WELL, LITHONIA OR APPROVED EQUAL	
F	CEILING HUNG DOWN LIGHT FIXTURE ASSEMBLY			COMPACT FLUORESCENT LAMP	
G	HONEY WELL LED WALL PACK SECURITY LIGHT ASSEMLBY			HONEY WELL, LITHONIA OR APPROVED EQUAL	

REVISIONS

NO:	DATE:	REMARKS

Government of the Virgin Islands
Department of Public Works
8244 Sub Base
St. Thomas, U.S.V.I 00802-5805
telephone: 340.776.4844
fax: 340.715.8135

Department of Public Works
Office Building
Second Floor Renovation
Parcel No. 6 Estate Susannaberg
St. John U.S.V.I 008030

DATE:	7/8/19
DRAWN BY:	KRB
CHECKED BY:	JM
APPROVED BY:	NMP

PROJECT NO:

CONTRACT NO:

SHEET NO:

E1.0

POWER/LIGHTING