Form No. DPP-IFB-55-75
APPROVED Com. DPP
October 30, 1974
REVISED: 3-18-08

GOVERNMENT OF
THE VIRGIN ISLANDS OF THE UNITED STATES

o

DEPARTMENT OF PROPERTY AND PROCUREMENT

o

INVITATION FOR BIDS

o

Invitation No. IFB024DPNRT20 (C) Date: February 14, 2020

Pursuant to Laws of the Government of the Virgin Islands sealed bids in Quintuplicate (5) copies **(1) original and (4) copies)** for the work described herein will be received on **Monday, March 11, 2020 at 10: 00 AM the Department of Property & Procurement** and publicly open thereafter.

Description of Work and Project Number: ***Krum Bay Dock Reconstruction***

Pre-Bid Conference: Monday, February 24, 2020 at 10:00 o'clock a.m., at the Department of Property and Procurement Conference Room, 8201 Subbase – 3rd Floor, St. Thomas, Virgin Islands. **A site visit will take place immediately following the meeting.**

Cost Per Set: $100.00 NON-REFUNDABLE

Liquidated Damage: $100.00 per calendar day

Completion time of Work: 210 calendar days

Information regarding bidding documents

Bidding Documents include the Public Notice, this Invitation to Bid, Instruction to Bidders, Contractor's Qualification and Financial Statement, the Contract, Performance and Payment Bonds, General Provisions, Special Provision, Supplemental Specifications, Plan and Specifications. All documents may be obtained from the Department of Property and Procurement.

Each bid must be accompanied by a Bid Guarantee as provided for in Form No. P&P-ITB-CC-16-73 (Instruction to Bidders) which is hereby made a part of this Invitation and by this reference incorporated herein as fully and effectively as if set forth in detail. Bid Guarantee for Preferred Bidders will be a specified in 31 V.I.C. 236a (Act No. 2995 approved April 16, 1971) if Preferred Bidders Act applies. If Preferred Act

does not apply, failure to provide a five (5%) percent bond will render the bid unresponsive. It is the Bidder's responsibility to determine if the Act Applies.

The Bid Guarantee for bidders not claiming or having the status of a preferred bidder will be Five (5%) per cent of the bid price. Bid Guarantee will be in the form of a Bond (Corporate or Individual Surety), Money Order, Certified Check, or Irrevocable Letter of Credit.

No Bidder will be allowed to withdraw his bid within a period of thirty (30) calendar days following the date set for the opening thereof.

Preferred Bidder:

Any bidder claiming eligibility as a "preferred bidder" under the provision of the Preferred Bidder's Act (31 VIC 236a – Act No. 2995, approved April 16, 1971) must request that his name be added to a preferred bidder's list to be maintained by the Commissioner of Property and procurement.

If a bidder has not previously filed a notarized Certificate with the Commissioner of Property and Procurement, copies thereof may be obtained from the Department of Property and Procurement, Division of Procurement, Building No. 1, Sub Base, Third Floor, St. Thomas, Virgin Islands and/or from 3274 Estate Richmond, Christiansted, St. Croix, Virgin Islands.

Certificate must be fully completed, notarized and filed in the Division of Procurement before the day and hour set for bid opening.

Contractor's Qualification Statement and Condensed Current Financial Statement

Each bidder must submit with his bid an executed copy of Contractor's Qualification Statement and condensed financial statement which is hereby made a part of this Invitation and by this reference incorporated herein as fully and effectively as if set forth in detail.

Corporate Documents

a. Current Virgin Islands Business License for services being advertised. All Bidders bidding as a Joint Venture must be licensed as Joint Venture in the U. S. Virgin Islands.
b. Current trade name registration certificate, if applicable
c. Certificate of Good Standing dated July 1, 2019 or later
d. Articles of Incorporation (for Corporations) or Articles of Organization (for LLC's) or qualification (Limited Partnerships).

Insurance Requirements

The Cost of which shall be borne by the Contractor and maintained fully during the term of the contract.

a. Certificate of Government Insurance (Workers Compensation):
   i. Respondent will provide a Certificate of Insurance reflecting the required coverage by Virgin Islands law.

b. Comprehensive General Liability Insurance:
   ii. Respondent shall carry comprehensive general liability on an occurrence form with no "x, c, or u" exclusions with the following minimum limits:
      1. Each Occurrence - $1,000,000.00
      2. Damages to Rented Premises- $50.000.00
      3. Medical Expenses - $50,000.00
      4. Persona & Adv Injury - $1,000,000.00
      5. General Aggregate - $2,000,000.00
      6. Products – Complete Ops. Aggregate - $2,000,000.00

   iii. General Aggregate shall apply on a basis.
   iv. Respondent shall provide a Certificate on Insurance reflecting required coverage.
   v. In award, the Contractor shall provide proof of adding the Government as an additional insured via a scheduled/individual endorsement.

Non -Collusion

Each bidder must submit with the bid a notarized copy of the Non-Collusion Affidavit which is hereby made a part of this Invitation and by this reference incorporated herein as fully and effectively as if set forth in detail.

BONDS:

A Bid Bond, Performance Bond and Payment each are required as follows:

Bid Bond:	5% of the Contract
Performance Bond:	100% of the Contract
Payment Bond:	100% of the Contract

GOVERNMENT OF
THE VIRGIN ISLANDS OF THE UNITED STATES

DEPARTMENT OF PUBLIC WORKS
Division of Engineering

KRUM BAY FACILITY DOCK RECONSTRUCTION
FOR THE DEPARTMENT OF PROPERTY & NATURAL RESOURCES
BID SCHEDULE
NOVEMBER 2019

The undersigned contractor proposes to furnish all labor, equipment, machinery, material and contingencies for the completion of the project as outlined below

No.	DESCRIPTION	UNITS	QTY.	PRICE	TOTAL
	GENERAL				
a	Mobilization/ Demobilization	L S	%		
b	Contractor Material Testing	L S	1		
c	Turbidity Curtain - Floating Berm with a Skirt	L F	400		
	DOCK SECTION 2				
a	Resurvey and Straighten Existing Pile Templates	Ea	10		
b	Drive Remaining 12" Coated Pilings	Ea	10		
c	Drill Rock Sockets 6 Feet Into Rock Beyond the Tip of the Piles	Ea	20		
d	Install Concrete Piles, Fabricate Rebar Cages, Grout Piles and Rock Socket, fill with 5,000 psi Concrete per Design Drawings	Ea	20		
e	Install Concrete Pile Caps per Design - "Rectangular" Shape - 6'x6'	Ea	1		
f	Install Concrete Pile Caps per Design - "T" Shape - 2'x6'	Ea	8		
g	Install Marine Treated Timber Framing and Deck per Design Drawings with all Hardware and Fasteners (Typ 316 Stainless Steel)	S F	792		
h	Install 18"Aluminum Cleats	Ea	20		
	GRAND TOTAL				

CONTRACTOR: _____

GOVERNMENT OF
THE VIRGIN ISLANDS OF THE UNITED STATES

OFFICE OF
ENGINEERING

DEPARTMENT OF PUBLIC WORKS
8244 SUB BASE
ST. THOMAS, V.I. 00802-5805

TEL: (340) 776-4844

KRUM BAY DOCK RECONSTRUCTION
SCOPE OF WORK

OBJECTIVE

The objective of this project is to complete the construction of two dock piers at Krum Bay. At a minimum, the following work needs to be performed:

SECTION 1

1. Resurvey and straighten existing pile templates as required
2. Drive remaining 12" coated pipe piles. All required pilings are onsite.
3. Drill rock sockets 6' into rock beyond the tip of the piles
4. Fabricate rebar cages and grout piles and rock sockets with 5000 psi concrete per design drawing
5. Install Concrete Pile caps per design
6. Install Marine Treated Timber framing and deck per design drawings
7. All hardware and Fasteners to be T316 SS

All work shall be done in accordance with the Plans, Manufactures Specifications, Bid Schedule, U.S. Virgin Islands Building Code, International Building Code, Federal Projects Manual FP14, Manual of Uniform Traffic Control Devices 2009 and the direction of the Project Architect/ Engineer in writing.

1. Prior to the commencement of Work by Contractor, contractor will have all applicable bonds, licenses, sureties and permits in place prior to the commencement of work.

2. Contractor shall be exclusively responsible for the safety, security, and condition of all of materials and equipment and personal stored/working on the construction site, and no such stored or loose materials shall be deemed a part of the Project until after the same have been properly installed by the Contractor in the Project, accepted and paid for by the Contractor. Contractor shall exclusively bear the risk of loss of such stored materials prior to proper installation even if the stored material has been paid for by the contractor.

3. Further, Contractor shall be responsible for any damages done to material, equipment or property by its workforce, subcontractors, or vendors.

4. Unless otherwise authorized in writing in advance by the Contractor, Contractor states that the Work performed under this Agreement will be performed by the Contractor and his regularly employed employees.

5. Not later than the time of delivery of materials to the job site, Contractor shall provide all "materials safety data sheets" pertaining to materials being brought onto the site. Contractor further agrees that it shall comply with all local, federal laws, ordinances and regulations in connection with the Contractor's Work including, but -not limited to OSHA Standards, Rules and Regulations.

6. During the term of this Agreement, Contractor shall pay particular attention to the daily clean up and removal of all trash and rubbish generated on the job site by the Contractor or its vendors. Contractor shall be responsible for the removal of all rubbish and trash it has generated, from its work area on a daily basis and place all such rubbish and trash in waste containers located throughout the Project. In the event Contractor fails to perform this daily cleaning and trash removal agreement, Contractor may assess a portion of the cost of daily cleanup of the job site including, but not limited to, the cost of the maintenance of said trash and rubbish receptacles against the Contractor in the form of a negative change order after fair and prior notice has been given.

7. Upon the completion of the Contractor's Work, and when practical, the Contractor shall furnish the User Agency with a warranty acceptable in all respects to the User Agency to repair and/or -replace at the Contractor's sole expense all defects in materials and labor in the Contractor's Work appearing or occurring within one (1) year after the issuance of the certificate of occupancy of the premises upon which Subcontractor's Work is performed. Additionally, in the event the manufacturer of any material supplied by the Contractor to the Project exceeds the term of the Subcontractor's letter of credit or warranty, The Contractor shall further assign and deliver to the User Agency said manufacturer's warranty. Performance of warranty repair work and replacement of materials for defects occurring within the warranty period shall be the Contractor's sole and exclusive responsibility at the Contractor's sole and exclusive expense.

8. Any Work that is in addition to the work required by this Subcontract shall be construed as extra work **("EXTRA WORK").** Extra Work will be subject to prior written approval by the Department of Public Works and shall be granted or denied prior to the execution of any such Extra Work. Approved Extra Work shall be subject to the execution of a change order signed by an authorized representative of the Contractor and the Owner or Contractor which shall be executed prior to the furnishing of such materials or performance of such labor or both. Any Extra Work not so authorized in advance shall be performed or furnished at the sole expense of the Contractor, and neither the Contractor nor the Owner shall be liable or responsible to the Contractor for the payment of any such Extra Work. Extra work must be approved before it is done.

9. All materials supplied or used by the Contractor in the performance of its Work shall be as specified and approved by the Department of Public Works. Contractor shall submit all such materials to the Department of Public Works for approval prior to the installation thereof on the premises unless otherwise agreed or waived by the Department of Public Works in writing. All work and materials will be per the plans and specifications provided unless authorized in writing prior to starting the work.

10. If job is subject to inclement weather, it is the responsibility of the Contractor to keep track of these days and present to the Department of Public Works on a weekly basis to compare against their daily log. Days that are in agreement, will be placed in a change order format and will be presented with scheduled monthly payment.

11. The Contractor is contracted to provide complete construction, including code requirements, and workmanship of equal or better finishes based on the VI Building Code and to the intent of the contract documents. It is common and known that items of importance are sometimes overlooked in drawings and in specifications. If missing items would normally be included in a particular scope of work, or required for the completion of a particular trades work, then it is included in this contract and not an opportunity for change order.e work be completed in all respects for the use intended as a part of this general cope.

12. Contractor agrees to furnish all labor, supervision, fasteners, tools, taxes, equipment, fuel fees, licenses, insurance and all other costs as required to perform all work covered in the construction scope of the applicable division that this Contractor represents itself as having expert knowledge in and regular engagement withContractor shall call and cause all required inspections for his own work and convey all inspection results to the DPW Inspector/Engineer. If unsatisfactory results are discovered, this Contractor will immediately suspend its construction activities until such work is corrected and inspections are passed.

13. Upon reward of this contract, Contractor shall perform due diligence and shall prepare all necessary basic diagrams or layouts outlining his/her concerns. If value engineering or alterations to the plans/specifications is involved, such shall be presented to the Department of Public Works prior to the execution of the contract.

14. Contractor shall commence the work to be performed per the contract documents in accordance to the terms of this agreement commencing on the date specified and provided by the User Agency and shall complete all work by the finish date specified on the Construction Schedule or as adjusted from time to time by the Department of Public Works.

15. Under **NO CIRCUMSTANCES** will there be additional money granted for extra work without previous written authorization and executed change order from the User Agency.

16. Contractor shall be completely responsible and provide equipment for receiving, unloading, taking inventory, storing, protecting and signing for all materials installed under this agreement.

17. This Contractor will verify all detail and dimensions for fit of work in all regards.

18. Contractor acknowledges that he will provide the necessary manpower, required to maintain the project schedule in all phases of his work to include any required overtime.

19. Hard Hats are a requirement of this contract.

20. Provide Material Safety Data Sheets (MSDS) for all materials being provided or utilized under this Contract agreement. And its written OSHA policy and written Hazardous Materials Policy before work commences.

21. Contractor will keep onsite material stockpiles and building workspace stockpiles to a minimum, organized and out of the way so as not to impede any other trades, and as directed by the Construction Manager.

22. Contractor is responsible for loss, theft and damage of all materials installed or otherwise until such material has been installed, approved and paid for by Contractor.

23. Contractor reserves the right, to supplement work after proper notification of non-performance has been given.

24. Contractor will furnish the names of the Subcontractors it introduces to the project.

25. Contractor will disclose the amounts of money owed to each subcontractor and submit proper lien waivers.

26. Contractor shall make himself/herself available for either weekly or biweekly meetings (as mutually agreed upon with the Department of Public Works) to discuss project progress/concerns. Any problems deemed an emergency shall be **IMMEDIATELY** made known to the Department of Public Works.

The undersigned Contractor shall furnish all labor, equipment, machinery, material and miscellaneous items for the completion of the Project as outlined in the Contact Drawings, Specifications and Bid Schedule.

DPNR Dock

SUBASE ST. THOMAS, U.S.VIRGIN ISLANDS

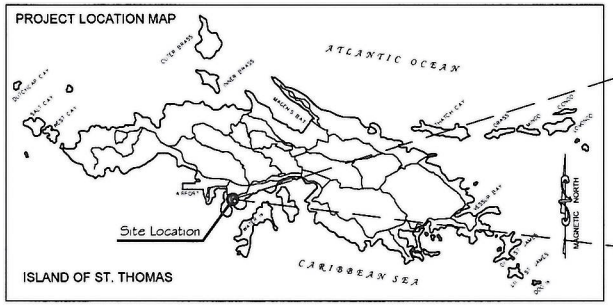

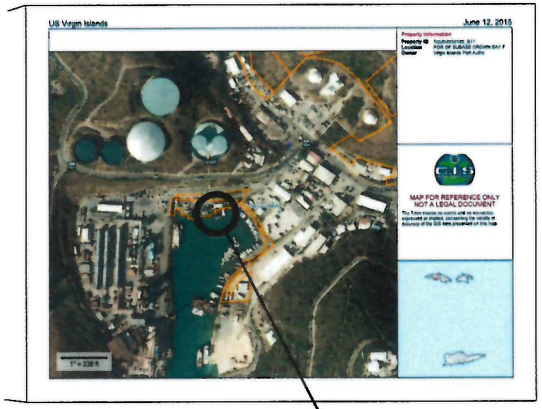

GENERAL NOTES:

A. GENERAL :

1. ALL CONSTRUCTION SHALL CONFORM TO THE 2009 INTERNATIONAL BUILDING CODE UNLESS MORE STRINGENT REQUIREMENTS ARE REQUIRED IN THE PLANS AND SPECIFICATIONS.

2. THE CONTRACTOR SHALL VERIFY IN THE FIELD ALL CONDITIONS, ELEVATIONS AND DIMENSIONS BEFORE STARTING WORK. THE ARCHITECT AND STRUCTURAL ENGINEER SHALL BE NOTIFIED IMMEDIATELY IF ANY DISCREPANCIES ARE FOUND.

3. THE CONTRACTOR SHALL INFORM THE ENGINEER IN WRITING OF ANY DISCREPANCIES OR OMISSIONS NOTED ON THE DRAWINGS OR IN THE SPECIFICATIONS OR OF ANY VARIATIONS NEEDED IN ORDER TO CONFORM TO CODES, RULES AND REGULATIONS. UPON RECEIPT OF SUCH INFORMATION, THE ENGINEER WILL SEND WRITTEN INSTRUCTIONS TO ALL CONCERNED, AND WORK SHALL BE PERFORMED IN A MANNER AS DIRECTED BY THE ENGINEER. ANY SUCH DISCREPANCY, OMISSION, OR VARIATION NOT REPORTED, SHALL BE THE RESPONSIBILITY OF THE CONTRACTOR.

4. THE CONTRACT DOCUMENTS REPRESENT THE FINISH STRUCTURE. THEY DO NOT INDICATE METHOD OF CONSTRUCTION.

5. IT SHALL BE THE RESPONSIBILITY OF THE CONTRACTOR TO PROVIDE TEMPORARY BRACES, SHORES AND COTS, WHEREVER NECESSARY TO SUPPORT ALL LOADS TO WHICH THE STRUCTURE MAY BE SUBJECTED DURING CONSTUCTION, INCLUDING ERECTION EQUIPMENT AND ITS OPERATION. THIS TEMPORARY SUPPORT SYSTEM SHALL HOLD ALL ELEMENTS AND MEMBERS IN THEIR FINAL POSITION UNTIL TOTALLY AND FINALLY CONNECTED TO THE PERMANENT BRACING ELEMENTS.

6. THE TYPICAL NOTES AND DETAILS SHALL APPLY IN ALL CASES UNLESS SPECIFIC DETAILS OCCUR ELSEWHERE. WHERE NO DETAIL IS SHOWN, CONSTRUCTION SHALL BE AS FOR SIMILAR WORK.

7. REQUIRED INSPECTIONS BY VIRGIN ISLANDS DEPARTMENT OF PLANNING AND NATURAL RESOURCES (BUILDING DEPARTMENT):

a. FOUNDATIONS
b. CONCRETE

B. CONCRETE:

1. CONCRETE WORK SHALL BE IN ACCORDANCE WITH AMERICAN CONCRETE INSTITUTE (ACI) – BUILDING CODE REQUIREMENTS FOR REINFORCED CONCRETE (ACI 318– LATEST REVISION).

2. CONCRETE SHALL HAVE A MINIMUM COMPRESSIVE STRENGTH AFTER 28 DAYS EQUAL TO OR GREATER THAN 5,000 PSI.

3. CONTINUOUS INSPECTION REQUIRED FOR ALL CONCRETE. INSPECTION BY BUILDING INSPECTOR REQUIRED FOR PLACEMENT OF REINFORCING STEEL PRIOR TO PLACING CONCRETE. CONTINUOUS INSPECTION IS NOT REQUIRED DURING PLACING CONCRETE OF THE REINFORCING.

4. ALL CONCRETE SHALL BE NORMAL WEIGHT (145 PCF) UNLESS NOTED AS LIGHTWEIGHT CONCRETE.

5. PORTLAND CEMENT: ASTM C150, TYPE I OR TYPE II, LOW ALKALI.

6. CONCRETE AGGREGATE SHALL CONFORM TO ASTM C33 WITH THE FOLLOWING NOMINAL LIMITATIONS:

a. FOOTINGS AND SLABS ON GRADE, 1 TO 1-1/4 INCH MAXIMUM.
b. WALLS AND STRUCTURAL SLABS, 3/4 INCH MAXIMUM.

7. CONCRETE STRENGHT MIX DESIGN SHALL BE DOCUMENTED BY NEW OR EXISTING TEST REPORTS FORM APPROVED LICENSED TESTING LABORATORIES PRIOR TO BATCHING.

8. EXPOSED CONCRETE FORMING AND FINISH SHALL BE AS NOTED ON ARCHITECTURAL DRAWINGS. SEE ARCHITECTURAL DRAWINGS FOR DETAILS.

9. PROJECTING CORNERS OF BEAMS, COLUMNS, ECT. SHALL BE FORMED WITH 3/4 INCH CHAMFER UNLESS OTHERWISE DETAILED.

10. FORMS FOR CONCRETE SHALL BE LAID OUT AND CONSTRUCTED TO PROVIDE THE SPECIFIED CAMBERS SHOWN ON THE DRAWINGS.

D. REINFORCING STEEL FOR CONCRETE AND MASONRY:

1. REINFORCING BARS: ASTM A615, GRADE 60. ALL REINFORCING STEEL THAT IS TO BE WELDED SHALL CONFORM TO ASTM A706, UNLESS OTHERWISE NOTED ON PLANS.

2. WELDED WIRE FABRIC: ASTM A185.

3. WELDING ELECTRODES: AWS D1.4, CLASS E90, LOW HYDROGEN.

4. MINIMUM SPLICE LENGTHS, UNLESS DETAILED OTHERWISE:

a. CONCRETE SEE SCHEDULE ON DRAWING.
b. MASONRY SEE SCHEDULE ON DRAWING.
c. WELDED WIRE FABRIC SHALL BE SPLICED WITH A MINIMUM LAP OF 12 INCHES.

5. MINIMUM CLEARANCE BETWEEN REINFORCING AND FACE OF CONCRETE SHALL BE AS FOLLOWS (UNLESS SHOWN OTHERWISE):

a. CONCRETE BELOW GRADE (CAST AGAINST SOIL) = 3"
b. CONCRETE BELOW GRADE (FORMED) = 2"
c. CONCRETE WALLS, EXPOSED TO WEATHER = 1-1/2"
d. CONCRETE WALLS, INTERIOR WALLS = 3/4"
e. CONCRETE SLAB (STRUCTURAL) = 3/4"
f. CONCRETE BEAMS AND COLUMNS = 1-1/2"

6. SPLICES IN COLUMNS AND BEAMS SHALL OCCUR ONLY WHERE DETAILED. SPLICES IN CONTINUOUS GRADE BEAMS SHALL OCCUR AT 1/3 SPAN. CONTACT STRUCTURAL ENGINEER IF CLARIFICATION IS NEEDED.

7. SPLICES IN HORIZONTAL WALL REINFORCEMENT SHALL BE STAGGERED 3'-0" MINIMUM FROM SPLICE CENTERLINE WHERE WALLS HAVE TWO LAYERS OF REINFORCING, SPLICES SHALL NOT OCCUR IN THE SAME LOCATION.

8. ALL REINFORCING SHALL BE ACCURATELY PLACED AND ADEQUATELY SUPPORTED BEFORE CONCRETE IS PLACED AND SHALL BE SECURED AGAINST DISPLACEMENT WITHIN PERMITTED TOLERANCE. CLEARANCE FOR REBAR SHALL BE SHOWN IN DETAIL OR CALLED IN NOTES. TOLERANCE SHALL BE AS PER ACI 318.

9. PROVIDE SLEEVES FOR PLUMBING AND ELECTRICAL OPENINGS IN THE CONCRETE MEMBERS BEFORE PLACING CONCRETE. DO NOT CUT ANY REINFORCING WHICH MAY CONFLICT. CORING IN CONCRETE IS NOT PERMITTED EXCEPT WHERE SHOWN ON DRAWINGS OR APPROVED BY THE STRUCTURAL ENGINEER.

E. NON-SHRINK GROUT OR DRYPACK:

1. NON-SHRINK GROUT OR DRYPACK SHALL CONSIST OF A PREMIXED NON-METALLIC FORMULA.

2. MINIMUM FORMULA REQUIREMENTS:

a. NO SHRINKAGE AFTER PLACEMENT.
b. NO EXPANSION AFTER SET (ASTM C-827).
c. INITIAL SET OF TIME NOT LESS THAN 45 MINUTES (ASTM C-1611).
d. ONE DAY COMPRESSIVE STRENGTH = 3000 PSI (ASTM C-109).
e. f'c AT 28 DAYS = 5000 PSI.

F. LUMBER:

1. ALL LUMBER SHALL BE SOUTHERN YELLOW PINE, GRADE #1 – PRESSURE TREATED, UNLESS OTHERWISE NOTED.

2. ALL FRAMING LUMBER SHALL BE S4S. LUMBER DESIGN BASED ON ANSI/NFPA NDS – 1991 – NATIONAL DESIGN STANDARDS.

3. PLYWOOD SHEATHING. – PRESSURE TREATED (U.S. PS1-83) WITH EXTERIOR GLUE AND APA RATED.

4. ALL NAILING SHALL BE IN ACCORDANCE WITH UBC REQUIREMENTS UNLESS NOTED OTHERWISE ON THE DRAWINGS. USE 316ss WIRE NAILS. NAILING OF ROOF, FLOOR AND SHEARWALL SHEATHING SHALL BE INSPECTED AND APPROVED BY THE BUILDING DEPARTMENT BEFORE COVERING.

5. BOLTS SHALL COMPLY WITH ASTM F593-02(2008) for 316ss. BOLT HOLES IN WOOD SHALL BE 1/16 INCH MAXIMUM OVERSIZE. ALL BOLT HEAD AND NUTS BEARING ON WOOD SHALL HAVE STEEL WASHERS.

6. NO LENGTH OF SPLIT IN MEMBER SHALL EXCEED THE WIDTH OF THE MINOR FACE.

7. CONNECTOR DESIGNATIONS REFER TO 316ss STRONG-TIE CONNECTORS BY SIMPSON COMPANY. ALL CONNECTORS TO BE INSTALLED ACCORDING TO MANUFACTURER'S INSTRUCTIONS.

8. ANY HOLE THROUGH STRUCTURAL MEMBERS FOR PIPES OR CONDUIT SHALL BE VERIFIED WITH THE STRUCTURAL ENGINEER.

9. NAIL ALL 2X DOUBLE JOIST WITH 16d 316ssNAILS AT 8 INCH ON CENTER, STAGGERED.

10. PROVIDE DOUBLE JOIST UNDER ALL PARALLEL PARTITIONS.

11. FOR SIZE AND LOCATION OF ROOF, FLOOR AND WALL OPENINGS, SEE ARCHITECTURAL, MECHANICAL AND ELECTRICAL DRAWINGS. FRAME ALL FOUR SIDES OF OPENING WITH ADEQUATE MEMBERS AND CONNECTIONS.

12. PROVIDE DOUBLE STUDS UNDER ALL BEAM ENDS UNLESS NOTED OTHERWISE AND CARRY STUDS DOWN TO FOUNDATION.

LIST OF DRAWINGS:

G1- COVER SHEET, GENERAL NOTES & LOCATION MAP
S1- STRUCTURAL PLAN & SECTIONS
S2- STRUCTURAL PLAN
S3- STRUCTURAL SECTIONS
S4- STRUCTURAL DETAILS

PROPERTY

DPNR
Parcel 1.1
Port of Subase Crown Bay Fill
St. Thomas, USVI

GENERAL NOTES & SITE LOCATION MAPS

REVISIONS		
No	DESCRIPTION	DATE

PAUL FERRERAS, PE
STRUCTURAL ENGINEER
9-1 Belevue, POB 600122
St.Thomas, USVI 00801
Phone (340) 714-5435
Fax (340) 777-5779
Paul@pfee.pro

NEW YORK LICENSE No 059450
NEW JERSEY LICENSE GE 32849
FLORIDA LICENSE No 54408
VIRGIN ISLANDS LICENSE No 4815

ALL INFORMATION COPY AND PATENTS IS THE PROPERTY OF PAUL FERRERAS, PE. THE CONCEPTS, IDEAS DESIGNS AND DETAILS AS SHOWN ON THE DOCUMENTS WERE CREATED, DEVELOPED AND PRESENTED FOR USE ON THE SPECIFIC PROJECT AND SHALL NOT BE REUSED FOR ANY PURPOSE WITHOUT EXPRESS WRITTEN CONSENT OF PAUL FERRERAS, PE. THE OWNER SHALL BE PERMITTED TO RETAIN COPIES FOR REFERENCE PURPOSE ONLY.

DATE	
JUNE 2, 2015	G1
DRAWN BY	
DPN	
SCALE	
As Noted	1 OF 5

Scope of Work:

- Rebuild Dock - use new piles with concrete pile caps, timber framing with removable decking.
- Work in accordance with Army Corps of Engineers Permit.
- Contractor may build temporary Ramp from Rubble Stone for Construction Purposes. All Stone must be inside silt boom. All Stone must be removed prior to removal of Silt Boom

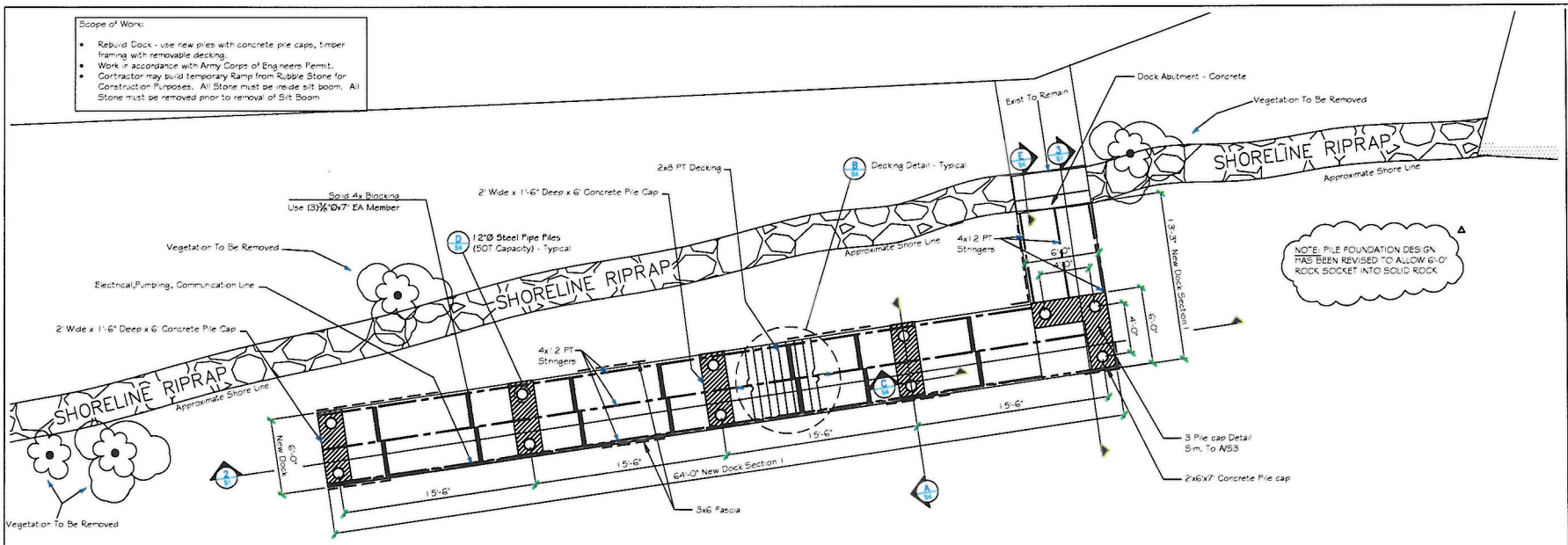

1 Dock Section 1 Structural Plan
S1 Scale: 1/4" = 1'-0"

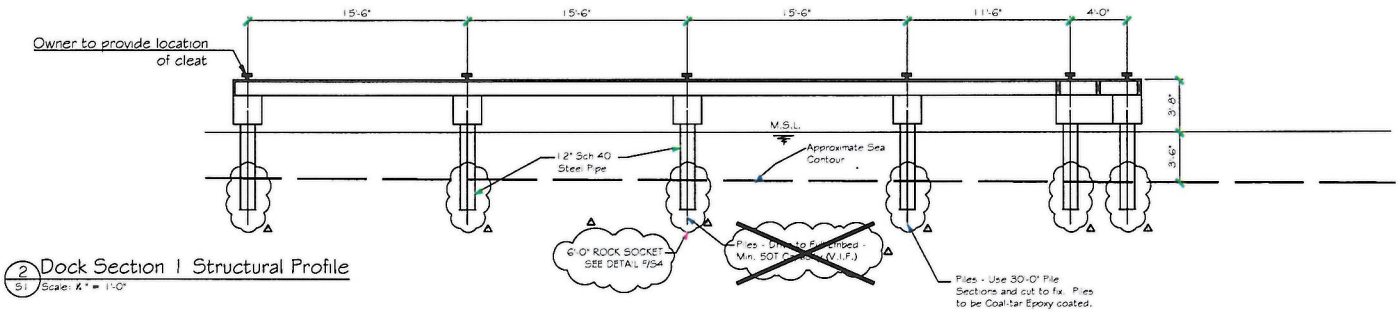

2 Dock Section 1 Structural Profile
S1 Scale: 1/4" = 1'-0"

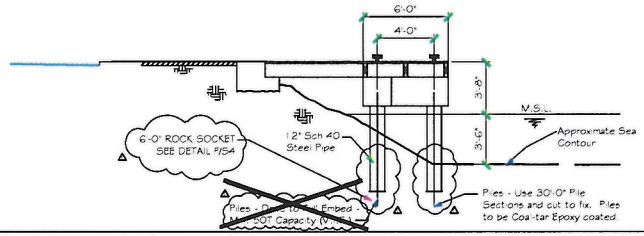

3 Dock Section 1 Structural Profile
S1 Scale: 1/4" = 1'-0"

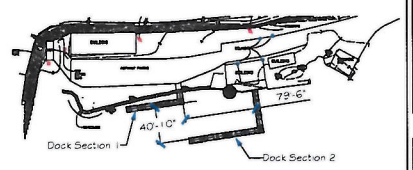

Key Plan

PROPERTY

DPNR
Parcel 11
Port of Subase Crown Bay Fill
St. Thomas, USVI

STRUCTURAL PLAN & PROFILES FOR REPLACEMENT PIER DPNR SECTION 1

REVISIONS

No	DESCRIPTION	DATE
△	Pile Modification	01-31-2017

PAUL FERRERAS, PE

STRUCTURAL ENGINEER

9-1 Bellevue, POB 600122
St. Thomas, USVI 00801
Phone (340) 714-5435
Fax (340) 777-5779
Paul@pfpe.pro

NEW YORK LICENSE No 059450
NEW JERSEY LICENSE GE 32849
FLORIDA LICENSE No 56408
VIRGIN ISLANDS LICENSE No 4818

ALL INFORMATION CONTAINED HEREIN IS THE PROPERTY OF PAUL FERRERAS, PE. THE CONCEPTS, IDEAS, DESIGNS AND DETAILS AS SHOWN ON THE DOCUMENTS WERE CREATED, DEVELOPED AND PREPARED FOR USE ON THE SPECIFIC PROJECT AND SHALL NOT BE REUSED FOR ANY PURPOSE WITHOUT EXPRESS WRITTEN CONSENT OF PAUL FERRERAS, PE. THE OWNER SHALL BE PERMITTED TO RETAIN COPIES FOR REFERENCE PURPOSE ONLY.

DATE: JUNE 2, 2015
DRAWN BY:
SCALE: As Noted
S1
2 OF 5

Scope of Work:

- Rebuild Dock - use new piles with concrete pile caps, timber framing with removable decking.
- Work in accordance with Army Corps of Engineers Permit.
- Contractor may build temporary Ramp from Rubble Stone for Construction Purposes. All Stone must be inside silt boom. All Stone must be removed prior to removal of Silt Boom

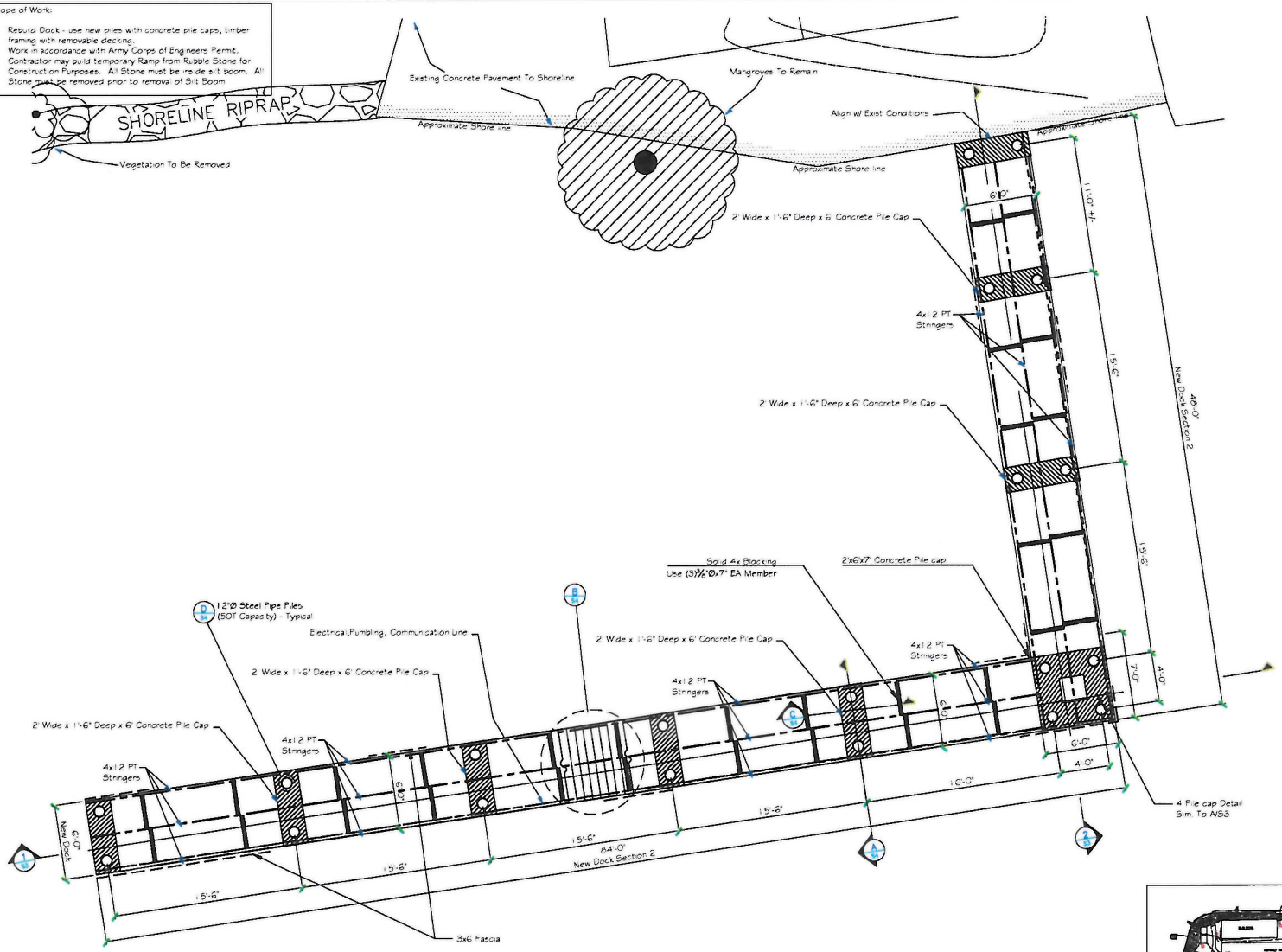

1 S2 Dock Section 2 Structural Plan
Scale: 1/4" = 1'-0"

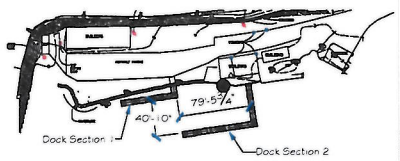

Key Plan

PROPERTY

DPNR
Parcel 1 1
Port of Subase Crown Bay Fill
St. Thomas, USVI

STRUCTURAL PLAN FOR REPLACEMENT PIER DPNR SECTION 2

REVISIONS		
No	DESCRIPTION	DATE
1	File Modification	01-31-2017

PAUL FERRERAS, PE

STRUCTURAL ENGINEER

P-1 Bellevue, POB 600122
St.Thomas, USVI 00801
Phone (340) 714-5435
Fax (340) 777-5779
Paul@pfpe.pro

NEW YORK LICENSE No 059450
NEW JERSEY LICENSE GE 32649
FLORIDA LICENSE No 56408
VIRGIN ISLANDS LICENSE No 4615

ALL INFORMATION CONTAINED HEREIN IS THE PROPERTY OF PAUL FERRERAS, PE. THE CONCEPTS, IDEAS DESIGNS AND DETAILS AS SHOWN ON THE DOCUMENTS WERE CREATED, DEVELOPED AND PROVIDED FOR USE ON THE SPECIFIC PROJECT AND SHALL NOT BE REUSED FOR ANY OTHER PURPOSE WITHOUT WRITTEN CONSENT OF PAUL FERRERAS, PE. THE OWNER SHALL BE PERMITTED TO RETAIN COPIES FOR REFERENCE PURPOSE ONLY.

DATE
April 2, 2015
DRAWN BY
SCALE
As Noted

S2

3 OF 5

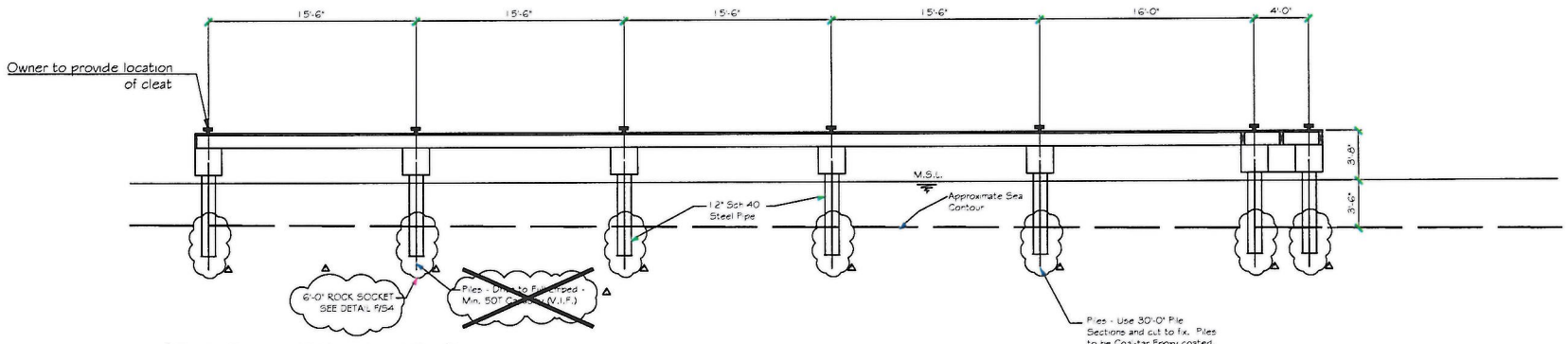

1 S3 Dock Section 2 Structural Profile
Scale: 1/4" = 1'-0"

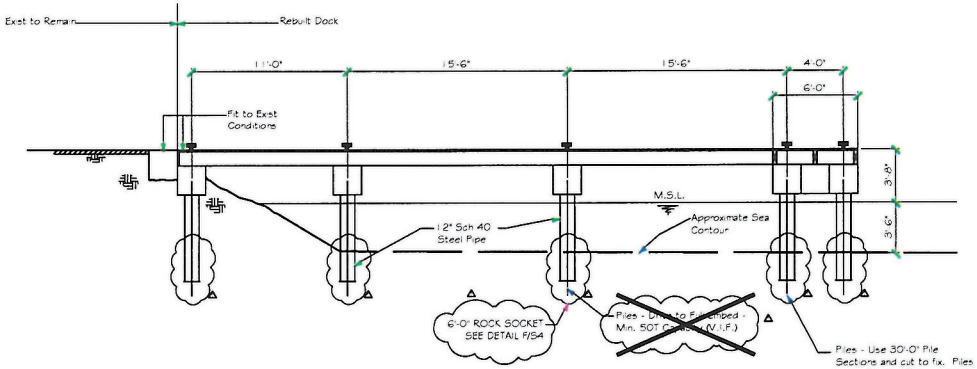

2 S3 Dock Section 2 Structural Profile
Scale: 1/4" = 1'-0"

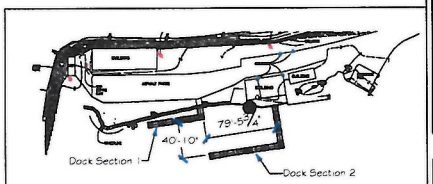

Key Plan

PROPERTY

DPNR
Parcel 11
Port of Subase Crown Bay Fill
St. Thomas, USVI

STRUCTURAL PROFILES FOR REPLACEMENT PIER DPNR SECTION 2

REVISIONS

No	DESCRIPTION	DATE
1	Fire Modification	01-31-2017

PAUL FERRERAS, PE
STRUCTURAL ENGINEER
9-1 Bellevue, POB 6001-22
St. Thomas, USVI 00801
Phone (340) 714-5435
Fax (340) 777-5779
Paul@pfpe.pro

NEW YORK LICENSE No 059450
NEW JERSEY LICENSE GE 32849
FLORIDA LICENSE No 56408
VIRGIN ISLANDS LICENSE No 4816

ALL INFORMATION CONTAINED HEREIN IS THE PROPERTY OF PAUL FERRERAS, PE. THE CONCEPTS, IDEAS, DESIGNS AND DETAILS AS SHOWN ON THESE DRAWINGS ARE CREATED, DEVELOPED AND PREPARED FOR USE ON THE SPECIFIC PROJECT AND SHALL NOT BE REUSED FOR ANY PURPOSE WITHOUT EXPRESS WRITTEN CONSENT OF PAUL FERRERAS, PE.
THE OWNER SHALL BE PERMITTED TO RETAIN COPIES FOR REFERENCE PURPOSE ONLY.

DATE
JUNE 2, 2015
DRAWN BY
SCALE
As Noted

S3

4 OF 5

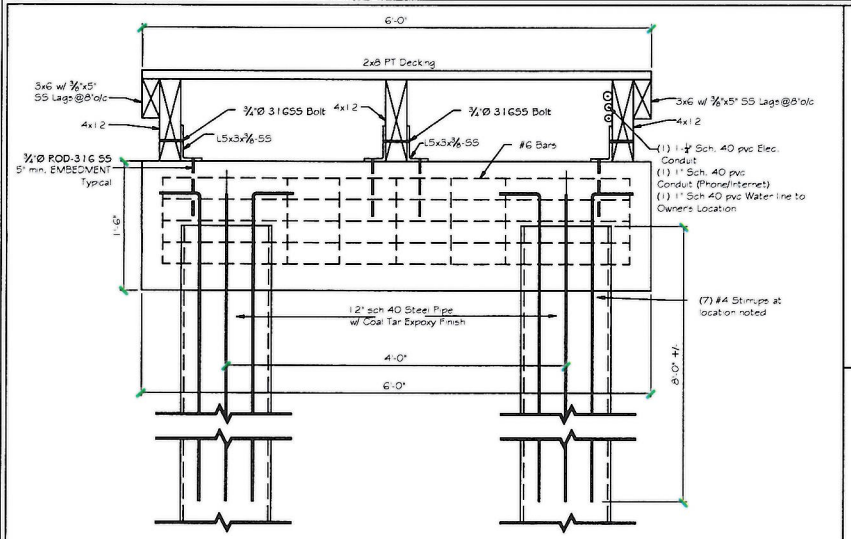

A S4 Cap Deck Detail
Scale: 1-1/2" = 1'-0"

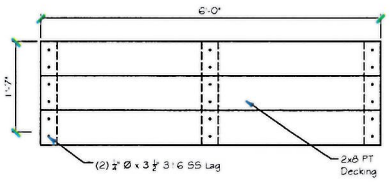

B S4 Removable Dock Decking
Scale: 1" = 1'-0"

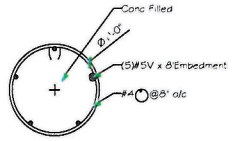

D S4 12" sch 40 Steel Pipe Detail
Scale: 3/4" = 1'-0"

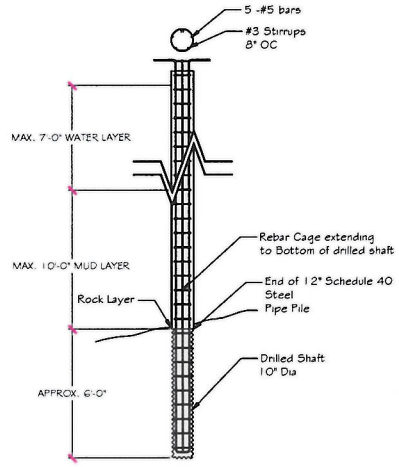

F S4 Detail
Scale: 3/8" = 1'-0"

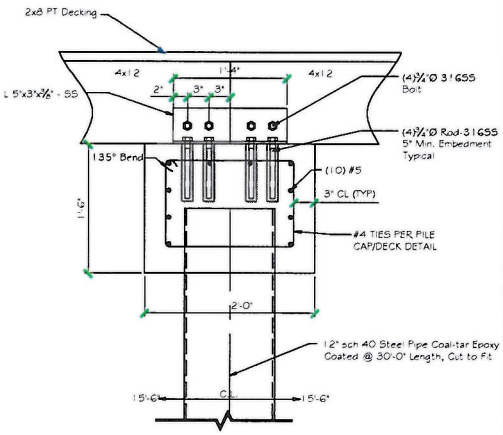

C S4 Pile Cap Detail
Scale: 1/2" = 1'-0"

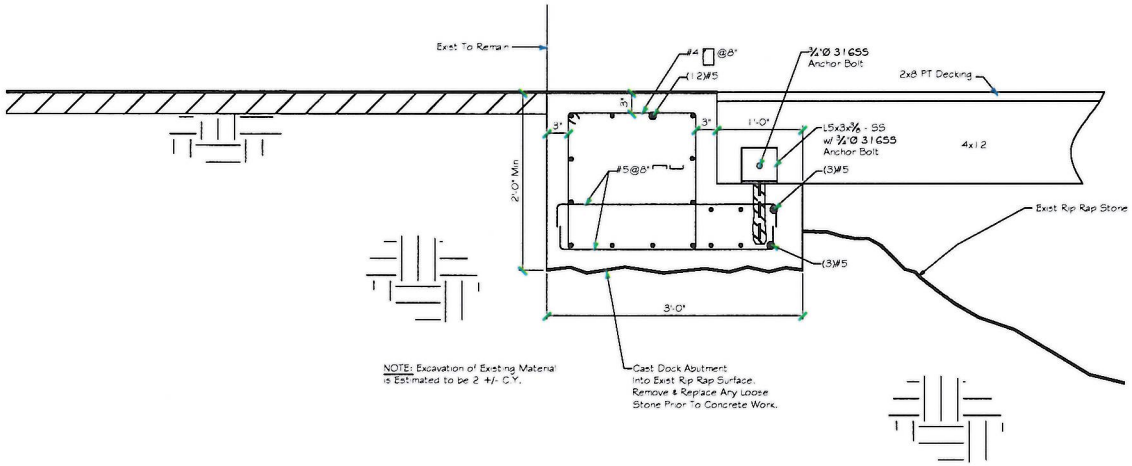

E S4 Detail
Scale: 1/2" = 1'-0"

PROPERTY

DPNR
Parcel 1.1
Port of Supase Crown Bay Fill
St. Thomas, USVI

STRUCTURAL DETAILS FOR REPLACEMENT PIER DPNR SECTION 1 AND SECTION 2

REVISIONS

No	DESCRIPTION	DATE
1	Per Modification	01-31-2017

PAUL FERRERAS, PE

STRUCTURAL ENGINEER

9-11 Bellevue, POB 60122
St. Thomas, USVI 00801
Phone (340) 714-5435
Fax (340) 777-5779
Paul@pfpe.pro

NEW YORK LICENSE No 059450
NEW JERSEY LICENSE GE 32849
FLORIDA LICENSE No 56408
VIRGIN ISLANDS LICENSE No 4818

ALL INFORMATION CONTAINED HEREIN IS THE PROPERTY OF PAUL FERRERAS, PE. THE CONCEPTS, IDEAS, DESIGNS AND DETAILS AS SHOWN ON THE DOCUMENTS WERE CREATED FOR THE PURPOSE OF THE DESIGN OF THE SPECIFIC PROJECT AND SHALL NOT BE REUSED FOR ANY PURPOSE WITHOUT EXPRESS WRITTEN CONSENT OF PAUL FERRERAS, PE.
THE OWNER SHALL BE PERMITTED TO RETAIN COPIES FOR REFERENCE PURPOSE ONLY.

DATE
AUG 2, 2015
DRAWN BY
DFM
SCALE
As Noted

S4

5 OF 5

CONSTRUCTION CONTRACT

THIS AGREEMENT is made this ____ day of _____, 20__, in the Territory of the Virgin Islands, by and between the Government of the Virgin Islands, Department of Property & Procurement (hereinafter referred to as "Government') and [Insert Contractor's Name or Company Name] (hereinafter referred to as "Contractor").

WITNESSETH:

WHEREAS, the Government is in need of a contractor to furnish all labor, materials and equipment necessary for the **[Insert Project Description]** in strict accordance with the plans and specifications (incorporated by reference and made a part of this contract), which duties and responsibilities are more particularly described in ***Addendum I***, (Scope of Work), ***Addendum II*** (General Provisions and Warranties together with the additional General Provisions – Construction), ***Addendum III*** (Termination of Contracts), and ***Addendum IV*** (Compensation) attached hereto; and

WHEREAS, the Contractor represents that it is willing and capable of providing such services;

NOW THEREFORE, in consideration of the mutual covenants herein contained, and intending to be legally bound by this written instrument, the parties hereto do covenant and agree as follows:

1. **SERVICES**

The Contractor will provide the services described more particularly in Addendum I (Scope of Work) incorporated herein by reference and made a part of this construction contract.

2. **TERM**

This Contract shall commence upon execution by the Governor and shall terminate within **number of days in words** (# of days) calendar days thereafter, or in accordance with an agreed upon extension pursuant to the General Provisions. Particular reference should be made to the Notice to Proceed.

3. **COMPENSATION**

The Government, in consideration of satisfactory performance of the services described in Addendum I, agrees to pay the Contractor the sum of **[insert contract price in words (contract price in numbers)]** in accordance with the provisions set forth in Addendum IV (Compensation), attached hereto is hereby incorporated by reference and made a part of this contract.

4. **LIQUIDATED DAMAGES**

It is hereby expressly agreed by the parties hereto that in the event the Contractor has not completed the scope of work under the term set forth in Paragraph 2 hereof, **[insert liquidated damages in words (liquidated damages in numbers)]** for each calendar day or portion thereof shall be due the Government. The liquidated damages shall first be deducted from any contract monies due, but not yet paid to the extent available.

5. **RECORDS**

The Contractor will present documented, precise records of time and/or money expended under this Contract.

6. **PROFESSIONAL STANDARDS**

The Contractor agrees to maintain the professional standards applicable to its profession and to Contractors doing business in the United States Virgin Islands.

7. **DOCUMENTS, PRINTOUTS, ETC.**

Certified copies of all documents, books, records, instructional materials, programs, printouts and memoranda of every description derived therefrom and pertaining to this Contract shall become the property of the Government and shall be turned over to it at the

termination of this Contract, or at the Government's request, during the life of the contract. The above-described materials shall not be used by Contractor or by any other person or entity except upon the written permission of the Government.

8. LIABILITY OF OTHERS

Nothing in this Contract shall be construed to impose any liability upon Government to persons, firms, associations, or corporations engaged by Contractor as servants, agents, independent contractors, or in any other capacity whatsoever, or make the Government liable to any such persons, firms, associations or corporations for the acts, omissions, responsibilities, obligations and taxes of Contractor or whatsoever nature, including but not limited to unemployment insurance and social security taxes for Contractor, its servants, agents or independent contractors.

9. ASSIGNMENT

The Contractor shall not subcontract or assign any part of the services under this contract without the prior written approval of the Government.

10. INDEMNIFICATION

Contractor agrees to indemnify, defend, and hold harmless the Government from and against any and all loss, damage, liability, claims, demands, detriments, cost, charges and

expenses (including attorney's fees) and causes of action of whatsoever character which the Government may incur, sustain or be subjected to, arising out of or in any way connected to the services to be performed by Contractor under this Contract and arising from any cause, except the sole negligence of Government.

11. INDEPENDENT CONTRACTOR

The Contractor shall perform this Contract as an independent contractor and nothing herein contained shall be construed to be inconsistent with this relationship or status.

12. GOVERNING LAW

This Contract shall be governed by the laws of the United States Virgin Islands and jurisdiction and venue are exclusive in the United States Virgin Islands.

13. WAIVERS AND AMENDMENTS

No waiver, modification, or amendment of any term, condition or provision of this Contract shall be valid or of any force or effect unless made in writing, signed by the parties hereto or their duly authorized representatives, and specifying with particularity the nature and extent of such waiver, modification, or amendment. Any such waiver, modification, or amendment in any instances shall in no event be construed to be a general waiver, modification, or amendment of any of the terms, conditions, or provisions of this Contract,

but the same shall be strictly limited and restricted to the extent and occasion specified in such signed writing or writings.

14. ENTIRE AGREEMENT

This agreement constitutes the entire agreement of the parties relating to the subject matter addressed in this agreement. This agreement supersedes all prior communications, contracts, or agreements between the parties with respect to the subject matter addressed in this Agreement, whether written or oral.

15. RIGHT TO WITHHOLD

If work under this Contract is not performed in accordance with the terms, hereof, Government will have the right to withhold out of any payment due to Contractor, such sums as the Government may deem ample to protect it against loss or to assure payment of claims arising therefrom, and, at its option, the Government may apply such sums in such manner as the Government may deem proper to secure itself or to satisfy such claims. The Government will immediately notify the Contractor in writing in the event that it elects to exercise its right to withhold.

16. CONDITION PRECEDENT

This Contract shall be subject to the availability and appropriation of funds and to the approval of the Governor.

17. TERMINATION

Either Party will have the right to terminate this contract with cause on ten (10) days written notice to the other party specifying the date of termination. The attached "Addendum III- Termination of Contracts for the Convenience of the Government" is hereby fully incorporated herein by reference and is made a part of this agreement.

18. PARTIAL TERMINATION

The performance of work under this contract may be terminated by the Government in part, whenever the Government shall deem such termination advisable. This partial termination shall be effected by delivering to the Contractor a Notice of Partial Termination specifying the extent to which the term and/or duties under this contract are terminated and the date upon which such termination becomes effective. The Contractor shall be entitled to receive payment for services provided to the date of termination, including payment for the period of the ten (10) days' notice.

19. NON-DISCRIMINATION

No person shall be excluded from participating in, be denied the proceeds of, or be subject to discrimination in the performance of this Contract on account of race, creed, color, sex, religion, disability or national origin.

20. CONFLICT OF INTEREST

(a) Contractor covenants that it has no interest and will not acquire any interest, direct or indirect, which would conflict in any manner or degree with the performance of services required to perform under this Contract.

(b) Contractor further covenants that it is:

(1) not a territorial officer or employee (i.e., the Governor, Lieutenant Governor, member of the Legislature or any other elected territorial official; or an officer or employee of the legislative, executive, or judicial branch of the Government or any agency, board, commission, or independent instrumentality of the Government, whether compensated on a salary, fee or contractual basis); or

(2) a territorial officer or employee and, as such, has:

(i) familiarized itself with the provisions of Title 3, Chapter 37, Virgin Islands Code, pertaining to conflicts of interest, including the penalties provisions set forth in section 1108 thereof;

(ii) not made, negotiated or influenced this contract, in its official capacity;

(iii) no financial interest in the contract as that term is defined in section 1101, (1) of said Code chapter.

21. EFFECTIVE DATE

The effective date of this Contract is upon the execution by the Governor.

22. NOTICE

Any notice required to be given by the terms of this Contract shall be deemed to have been given when the same is sent by certified mail, postage prepaid or personally delivered, addressed to the parties as follows:

GOVERNMENT

Anthony D. Thomas
Commissioner Nominee
Department of Property and Procurement
#3274 Estate Richmond
Christiansted, VI 00820-4241

CONTRACTOR

Contractor's Name
Contractor's Title
Contractor's Name or Company Name
Contractor's P. O. Box
Contractor's City, State, Zip Code

23. LICENSURE

The Contractor covenants that it has:

a. obtained all of the applicable licenses or permits, temporary or otherwise, as required by Title 27 of the Virgin Islands Code; and

b. familiarized itself with the applicable provisions of Title 27 of the Virgin Islands Code pertaining to professions and occupations.

24. CONTRACTOR'S REPRESENTATIONS

The Contractor agrees that he is fully informed regarding all the conditions affecting the work to be done and labor and materials to be furnished for the completion of the Contract, and that he has been engaged in and now does such work and represents that he is fully equipped, competent, and capable of performing the work and is ready and willing to perform such work.

The Contractor agrees further to begin work not later than the date indicated on the formal notice to proceed and complete the work within the number of days specified in the proposal or as extended in accordance with the General Provisions of the Contract.

The Work shall be done under the direct supervision of the Government, and in accordance with the laws of the Government and it Rules and Regulations thereunder issued and any and all applicable federal rules and regulations. The parties hereto agree that this

contract shall, in all instances, be governed by the Laws of the Government of the Virgin Islands.

25. WARRANTY OF NON-SOLICITATION

The Contractor expressly warrants that he has employed no person to solicit or obtain this contract on his behalf, or to cause or procure the same to be obtained upon compensation in any way, contingent, in whole or in part, upon such procurement, and that he has not paid, or promised or agreed to pay to any person, in consideration of such procurement, or in compensation for services in connection therewith, any brokerage, commission, or percentage upon the amount receivable by him hereunder; and that he has not, in estimating the contract price demanded by him included any sum by reason of such brokerage, commission or percentage; and that all monies payable to him hereunder are free from obligation to any other person for services rendered, or supposed to have been rendered, in the procurement of this contract.

Breach of the warranty shall give the Government the right to terminate this Contract, or in its discretion, to deduct from the contract price or consideration the amount of such commission, percentage, brokerage or contingent fees.

26. FALSE CLAIMS

Contractor warrants that it shall not, with respect to this Contract, make or present any claim upon or against the Government of the Virgin Islands, or any officer, department, board, commission, or other agency thereof, knowing such claim to be false, fictitious or fraudulent. Contractor acknowledges that making such a false, fictitious, or fraudulent claim is an offense under Virgin Islands law.

27. DEBARMENT CLAUSE

By execution of this contract, the Contractor certifies that it is eligible to receive contract awards using federally appropriated funds and that it has not been suspended or debarred from entering into contracts with any federal agency. The Contractor shall include this provision in each of its subcontracts hereunder and shall furnish its subcontractors with the current "LIST OF PARTIES EXCLUDED FROM FEDERAL PROCUREMENT OR NON PROCUREMENT." In the event the Contractor or any subcontractor misrepresents its eligibility to receive contract awards using federal funds, the Contractor or subcontractor agrees that it shall not be entitled to payment for any work performed under this contract or any subcontract and that the Contractor or subcontractor shall promptly reimburse the Government of the Virgin Islands for any progress payments heretofore made. (Only insert if Contract involves federal funds)

28. NOTICE OF FEDERAL FUNDING

Contractor acknowledges that this Contract is funded, in whole or in part, by federal funds. Contractor warrants that it shall not, with respect to this Contract, make or present any claim knowing such claim to be false, fictitious, or fraudulent. Contractor acknowledges that making such a false, fictitious, or fraudulent claim is a federal offense. (Only insert if Contract involves federal funds)

29. Davis Bacon Act

Contractor herby agrees that it shall comply with all rulings and interpretations of the Davis-Bacon Act (40 USC 276a-5) and that the contractor and subcontractor agrees that all employees shall be paid the local prevailing wages as established by Virgin Islands statutes and laws. (Only insert if Contract involves federal funds)

30. Certification of Employment

Contractor herby agrees that pursuant to 31 V.I.C 236(h) it will hire at least two individuals from the Welfare to Work program administered by the Labor and Human Services Departments. (Only insert if Contract compensation is over $500,000)

31. **OTHER PROVISIONS**

Addendum II (General Provisions and Warranties) and Addendum III (Termination of Contracts) attached hereto are hereby incorporated by reference and made a part of this contract.

IN WITNESS WHEREOF, the parties have hereunto set their hands on the day and year first above written.

WITNESSES:

_____

_____

GOVERNMENT OF THE VIRGIN ISLANDS

_____ **Date:**_____

Anthony D. Thomas
Commissioner Nominee
Department of Property and Procurement

CONTRACTOR

_____ **Date:**_____

Contractor's Name, Title
Contractor's Company Name

(Corporate seal, if Contractor is a corporation)

APPROVED:

_____ Date: _____

Governor's Name
GOVERNOR OF THE VIRGIN ISLANDS

APPROVED AS TO LEGAL SUFFICIENCY
AT THE DEPARTMENT OF JUSTICE BY: _____

Date _____

CERTIFICATE OF APPROVAL

I hereby certify that this is a true and exact copy of Contract No. (**Insert Construction Contract Number**) entered into between the Department of Property and Procurement, on behalf of the **Insert User Agency and Contractor's Name/Company Name**

_____

Anthony D. Thomas., Commissioner Nominee
Department of Property and Procurement

Addendum I (include each addenda on a separate sheet of paper)

Scope of Work

Addendum II

General Provisions and Warranties

Additional General Provisions - Construction

Addendum III

Termination of Contracts

Addendum IV
Compensation

The Government, in consideration of the satisfactory performance of the services described in Addendum I (Scope of Work), agrees to make progress payments based on the Schedule of Values and invoices submitted by the Contractor **[Insert Contractor's Name or Company Name]** in accordance with Clause 7 (Payments to Contractor) of the General Provisions.

The parties agree that the sum to be paid under this contract is **[Insert Contract price in words] [(Insert Contract price in numbers)]**. The parties further agree that payments will be made in accordance with services rendered.

The final payment is subject to the inspection and acceptance of the project by the Government, the submission of all pertinent warranties, and the Release of Claims. Contractor shall submit a Waiver of Liens or Affidavits of subcontractors who have released the contractor of its obligations. Contractor shall also submit Consent of Surety before final payment and, upon the Government's request, any other documentation the Government deems necessary.

FORM NO. P&P-ITB-CC-16-73
APPROVED: 3-26-72
COMM OF PROP & PROC
REVISD 3-18-08

INSTRUCTIONS TO BIDDERS

(CONSTRUCTION CONTRACT)

1. Explanation to Bidders. Any explanation desired by a bidder regarding the meaning or interpretation of the invitation for bids, drawings, specifications, etc., must be requested in writing and with sufficient time allowed for a reply to reach bidders before the submission of their bids. Any interpretation made will be in the form of an amendment of the Invitation for bids, drawings, specifications, etc., and will be furnished to all prospective bidders. Its receipt by the bidder must be acknowledged by letter or telegram received before the time set for opening of bids. Oral explanations or instructions given before the award of the contract will not be binding.

2. Conditions Affecting the Work. Bidders should visit the site and take such other steps as may be reasonably necessary to ascertain the nature and location of the work, and the general and local conditions which can affect the work or the cost thereof. Failure to do so will not relieve bidders from the responsibility for estimating properly the difficulty or cost of successfully performing the work. The Government will assume no responsibility for any understanding or representations concerning conditions made by any of its officers or agents prior to the execution of the contract, unless included in the invitation for bids, the specifications, or related documents.

3. Bidder's Qualifications. Before a bid is considered for award, the bidder may be requested by the Government to submit a statement regarding his previous experience in performing comparable work, his business and technical organization, financial resources, and plant available to be used in performing the work.

4. Bid Guarantee. Where a bid guarantee is required by the invitation for bids, failure to furnish a bid guarantee in the proper form and amount, by the time set for opening of bids, may be cause for rejection of the bid.

A bid guarantee shall be in the form of a firm commitment, such as a bid bond, postal money order, certified check, cashier's check, irrevocable letter of credit or certain bonds or notes of the United States. Bid guarantees, other than bid bonds, will be returned (a) to unsuccessful bidders as soon as practicable after the opening of bids, and (b) to the successful bidder upon execution of such further contractual documents and bonds as may be required by the bid as accepted.

If the successful bidder, upon acceptance of his bid by the Government within the period specified therein for acceptance (sixty days if no period is specified) fails to execute such further contractual documents, if any, and give such bond(s) as may be required by the terms of the bid as accepted within the time specified (ten days if no period is specified) after receipt of the forms by him, his contract may be terminated for default. In such event he shall be liable for any cost of procuring the work which exceeds the amount of his bid, and the bid guarantee shall be available toward offsetting such difference.

5. Preparation of Bids. (a) Bids shall be submitted on the forms furnished, or copies thereof, and must be manually signed. If erasures or other changes appear on the form, each erasure or change must be initialed by the person signing the bid. Unless specifically authorized in the invitation for bids, telegraphic bids will not be considered.

(b) The bid form may provide for submission of a price or prices for one or more items, which may be lump sum bids, alternate prices, scheduled items resulting in a bid on a unit of construction or a combination thereof, etc. Where the bid form explicitly requires that the bidder bid on all items, failure to do so will disqualify the bid. When submission of a price on all items is not required, bidders should insert the words "no bid" in the space provided for any items on which no price is submitted.

(c) Unless called for, alternate bids will not be considered.

(d) Modifications of bids already submitted will be considered if received at the office designated in the invitation for bids by the time set for opening of bids. Telegraphic modifications will be considered, but should not reveal the amount of the original or revised bid.

6. Submission of Bids. Bids must be sealed, marked, and addressed as directed in the invitation for bids. Failure to do so may result in a premature opening of, or a failure to open, such bid.

7. Late Bids and Modifications or Withdrawals.

(a) Bids and modifications or withdrawals thereof received at the office designated in the invitation for bids after the exact time set for opening of bids will not be considered unless: (l) They are received before award is made; and either (2) they are sent by registered mail, or by certified mail for which an official dated post office stamp (postmarked) on the original Receipt for Certified Mail has been obtained and it is determined by the Government that the late receipt was due solely to delay in the mails for which the bidder was not responsible; or (3) if submitted by mail (or by telegram if authorized), it is determined by the Government that the late receipt was due solely to mishandling by the Government after receipt at the Government installation: Provided, That timely receipt at such installation is established upon examination of an appropriate date of time stamp (if any) of receipt (if readily available) within the control of such installation or of the post office serving it. However, a modification which makes the terms of the otherwise successful bid more favorable to the Government will be considered at any time it is received and may thereafter be accepted.

(b) Bidders using certified mail are cautioned to obtain a Receipt for Certified Mail showing a legible, dated postmark and to retain such receipt against the chance that it will be required as evidence that a late bid was timely mailed.

(c) The time of mailing of late bids submitted by registered or certified mail shall be deemed to be the last minute of the date shown on the postmark on the registered mail receipt or registered mail wrapper or on the Receipt for Certified Mail unless the bidder furnishes evidence from the post office station of mailing which establishes an earlier time. In the case of certified mail, the only acceptable evidence is as follows: (l) Where the Receipt for Certified Mail identifies the post office station of mailing, evidence furnished by the bidder which establishes that the business day of that station ended at an earlier time, in which case the time of mailing shall be deemed to be the last minute of the business day of that station; or (2) an entry in ink on the Receipt for Certified Mail showing the time of mailing and the initials of the postal employee receiving the item and making the entry, with appropriate written verification of such entry from the post office station of mailing, in which case the time of mailing shall be the time shown on the entry. If the postmark on the original Receipt for Certified Mail does not show a date, the bid shall not be considered.

8. Withdrawal of Bid. Bids may be withdrawn by written or telegraphic request received from bidders prior to the time set for opening of bids.

9. Public Opening of Bids. Bids will be publicly opened at the time set for opening in the Invitation for Bids. Their content will be made public for the information of bidders and others interested, who may be present either in person or by representative.

10. Award of Contract. (a) Award of contract will be made to that responsible bidder whose bid, conforming to the Invitation for Bids, is most advantageous to the Government, price and other factors considered.

(b) The Government may, when in its interest, reject any or all bids or waive any informality in bids received.

(c) The Government may accept any item or combination of items of a bid, unless precluded by the Invitation for Bids or the bidder includes in his bid a restrictive limitation.

11. Contract and Bonds. The bidder whose bid is accepted will, within the time established in the bid, enter into a written contract with the Government and, if required, furnish performance and payment bonds on Government standard forms in the amounts indicated in the Invitation for Bids or the specifications.

DPP-NCA-52-75
REVISED: 3-18-08

GOVERNMENT OF THE VIRGIN ISLANDS
DEPARTMENT OF PROPERTY AND PROCUREMENT

NON-COLLUSION AFFIDAVIT

———— 0 ————

..... being duly sworn, deposes and says that —

(1) He is [owner, partner, officer, representative, or agent] of .....

..... the bidder that has submitted that attached bid;

(2) He is duly informed respecting the preparation and contents of the attached bid and of all pertinent circumstances respecting such bid;

(3) Such bid is genuine and is not a collusive or sham bid;

(4) Neither the said bidder nor any of its officers, partners, owners, agents, representatives, employees or parties in interest, including this affiant, has in any way colluded, conspired, connived or agreed, directly or indirectly with any other bidder, firm or person to submit a collusive or sham bid in connection with the contract for which the attached bid has been submitted or to refrain from bidding in connection with such contract, or has in any manner, directly or indirectly, sought by agreement or collusion or communication or conference with any other bidder, firm or person to fix the price or prices in the attached bid or of any other bidder, or to fix any overhead, profit or cost element of the price or the bid price of any other bidder, or to secure through any collusion, conspiracy, connivance or unlawful agreement any advantage against The Government of the Virgin Islands or any person interested in the proposed contract; and

(5) The price or prices quoted in the attached bid are fair and proper and are not tainted by any collusion, conspiracy, connivance or unlawful agreement on the part of the bidder or any of its agents, representatives, owners, employees, or parties in interest, including this affiant.

_____
Signature of Affidavit

SUBSCRIBED AND SWORN to before me this....., day of .....

Notary Public

BID BOND *(See instruction on reverse)*	DATE BOND EXECUTED *(Must not be later than bid opening date)*	OMB NO.: 9000-0045

Public reporting burden for this collection of information is estimated to average 25 minutes per response, including the time for reviewing instructions, searching existing data sources, gathering and maintaining the data needed, and completing and reviewing the collection of information. Send comments regarding this burden estimate or any other aspect of this collection of information, including suggestions for reducing this burden, to the FAR Secretariat (MVR), Federal Acquisition Policy Division, GSA, Washington, DC 20405.

PRINCIPAL *(Legal name and business address)*

TYPE OF ORGANIZATION *("X" one)*

☐ INDIVIDUAL ☐ PARTNERSHIP

☐ JOINT VENTURE ☐ CORPORATION

STATE OF INCORPORATION

SURETY(IES) *(Name and business address)*

PENAL SUM OF BOND					BID IDENTIFICATION	
PERCENT OF BID PRICE	AMOUNT NOT TO EXCEED				BID DATE	INVITATION NO.
	MILLION(S)	THOUSAND(S)	HUNDRED(S)	CENTS	FOR *(Construction, Supplies, or Services)*	

OBLIGATION:

We, the Principal and Surety(ies) are firmly bound to the United States of America (hereinafter called the Government) in the above penal sum. For payment of the penal sum, we bind ourselves, our heirs, executors, administrators, and successors, jointly and severally. However, where the Sureties are corporations acting as co-sureties, we, the Sureties, bind ourselves in such sum "jointly and severally" as well as "severally" only for the purpose of allowing a joint action or actions against any or all of us. For all other purposes, each Surety binds itself, jointly and severally with the Principal, for the payment of the sum shown opposite the name of the Surety. If no limit of liability is indicated, the limit of liability is the full amount of the penal sum.

CONDITIONS:

The Principal has submitted the bid identified above.

THEREFORE:

The above obligation is void if the Principal - (a) upon acceptance by the Government of the bid identified above, within the period specified therein for acceptance (sixty (60) days if no period is specified), executes the further contractual documents and gives the bond(s) required by the terms of the bid as accepted within the time specified (ten (10) days if no period is specified) after receipt of the forms by the principal; or (b) in the event of failure to execute such further contractual documents and give such bonds, pays the Government for any cost of procuring the work which exceeds the amount of the bid.

Each Surety executing this instrument agrees that its obligation is not impaired by any extension(s) of the time for acceptance of the bid that the Principal may grant to the Government. Notice to the surety(ies) of extension(s) are waived. However, waiver of the notice applies only to extensions aggregating not more than sixty (60) calendar days in addition to the period originally allowed for acceptance of the bid.

WITNESS:

The Principal and Surety(ies) executed this bid bond and affixed their seals on the above date.

PRINCIPAL

SIGNATURE(S)	1. *(Seal)*	2. *(Seal)*	3. *(Seal)*	*Corporate Seal*
NAME(S) & TITLE(S) *(Typed)*	1.	2.	3.	

INDIVIDUAL SURETY(IES)

SIGNATURE(S)	1. *(Seal)*	2. *(Seal)*
NAME(S) *(Typed)*	1.	2.

CORPORATE SURETY(IES)

SURETY A	NAME & ADDRESS		STATE OF INC.	LIABILITY LIMIT ($)	*Corporate Seal*
	SIGNATURE(S)	1.	2.		
	NAME(S) & TITLE(S) *(Typed)*	1.	2.		

SURETY B	NAME & ADDRESS		STATE OF INC.	LIABILITY LIMIT ($)	Corporate Seal
	SIGNATURE(S)	1.	2.		
	NAME(S) & TITLE(S) *(Typed)*	1.	2.		
SURETY C	NAME & ADDRESS		STATE OF INC.	LIABILITY LIMIT ($)	Corporate Seal
	SIGNATURE(S)	1.	2.		
	NAME(S) & TITLE(S) *(Typed)*	1.	2.		
SURETY D	NAME & ADDRESS		STATE OF INC.	LIABILITY LIMIT ($)	Corporate Seal
	SIGNATURE(S)	1.	2.		
	NAME(S) & TITLE(S) *(Typed)*	1.	2.		
SURETY E	NAME & ADDRESS		STATE OF INC.	LIABILITY LIMIT ($)	Corporate Seal
	SIGNATURE(S)	1.	2.		
	NAME(S) & TITLE(S) *(Typed)*	1.	2.		
SURETY F	NAME & ADDRESS		STATE OF INC.	LIABILITY LIMIT ($)	Corporate Seal
	SIGNATURE(S)	1.	2.		
	NAME(S) & TITLE(S) *(Typed)*	1.	2.		
SURETY G	NAME & ADDRESS		STATE OF INC.	LIABILITY LIMIT ($)	Corporate Seal
	SIGNATURE(S)	1.	2.		
	NAME(S) & TITLE(S) *(Typed)*	1.	2.		

INSTRUCTIONS

1. This form is authorized for use when a bid guaranty is required. Any deviation from this form will require the written approval of the Administrator of General Services.

2. Insert the full legal name and business address of the Principal in the space designated "Principal" on the face of the form. An authorized person shall sign the bond. Any person signing in a representative capacity (e.g., an attorney-in-fact) must furnish evidence of authority if that representative is not a member of the firm, partnership, or joint venture, or an officer of the corporation involved.

3. The bond may express penal sum as a percentage of the bid price. In these cases, the bond may state a maximum dollar limitation (e.g., (e.g., 20% of the bid price but the amount not to exceed_____ dollars).

4. (a) Corporations executing the bond as sureties must appear on the Department of the Treasury's list of approved sureties and must act within the limitation listed therein. where more than one corporate surety is involved, their names and addresses shall appear in the spaces (Surety A, Surety B, etc.) headed "CORPORATE SURETY(IES)." In the space designed "SURETY(IES)" on the face of the form, insert only the letter identification of the sureties.

(b) Where individual sureties are involved, a completed Affidavit of Individual surety (Standard Form 28), for each individual surety, shall accompany the bond. The Government may require the surety to furnish additional substantiating information concerning its financial capability.

5. Corporations executing the bond shall affix their corporate seals. Individuals shall execute the bond opposite the word "Corporate Seal"; and shall affix an adhesive seal if executed in Maine, New Hampshire, or any other jurisdiction requiring adhesive seals.

6. Type the name and title of each person signing this bond in the space provided.

7. In its application to negotiated contracts, the terms "bid" and "bidder" shall include "proposal" and "offeror."

P & P-COS-13-73
COMM. OF PROP. & PROC.
APPROVED: 3-26-73
REVISED 3-18-08

GOVERNMENT OF
THE VIRGIN ISLANDS OF THE UNITED STATES

CONTRACTOR'S QUALIFICATION STATEMENT

CONTRACTOR .....

ADDRESS .....

DATE .....

TEL. NUMBER .....

CEL. NUMBER .....

1. How many years experience in construction work has your organization had

   (a) As a General Construction .....

   (b) As a Sub-Contractor .....

2. List the construction contracts your organization has under way on this date:

Contract Amount	Class of Work	Percent Completed	Location	Name of Owner

3. List contracts your organization has completed in the past three years:

Contract Amount	Class of Work	Completed	Location	Name of Owner

4. Have you ever failed to complete any work awarded to you? .....

   If so where and why? .....

   .....

   .....

5. Has any officer or partner of your construction ever been an officer or parent of some other organization that failed to complete a construction contract? ..... If so, state name of individual, other organization and reason therefore .....

   .....

   .....

6. Has any officer or partner of your organization ever failed to complete a construction contract handled in his own name? .....

   If so, state name of individual, name of Owner and reason therefore .....

   .....

   .....

7. In what other lines of business are you financially interested? .....

   .....

   .....

   .....

8. What is the construction experience of the principal individual of your organization?

Individual's Name	Present Position or Office	Years of Construction Experience	Magnitude and Type of Work	In what Capacity

9. In what manner have you inspected this proposed work? Explain in detail.

.....

.....

10. Explain your plan or lay out for performing the proposed work.

.....

.....

.....

.....

.....

.....

.....

.....

.....

.....

11. The work, if awarded to you, will have the personal supervision of whom? .....

.....

.....

12. Do you intend to do the transportation on the proposed work with your own equipment? .....

.....

.....

13. If you intend to sublet the transportation or perform it through an agent, stat estimated amount of sub-contract or agent's contract, and , if known, the name and address of sub-contract or agent, amount and type of his equipment and financial responsibility.

.....

.....

.....

14. Do you intend to do grading and foundation work with your own forces? .....

If so, give type of equipment to be used. .....

.....

.....

.....

15. If you intend to sublet the grading and foundation work or perform it through sub-contract, give the name and address of sub-contractor, if known of his equipment and financial responsibility.

.....

.....

.....

16. Do you intend to sublet any other portion of the work? .....

17. If so, state amount of sub-contract, and if known, the name and address of the sub-contractor, amount and type of his equipment and financial responsibility.

.....

.....

.....

18. From which sub-contractors do you expect to require a bond? ....

.....

.....

19. What equipment do you own that is available for proposed work?

Quantity	Item	Description, Size, Capacity, Etc.	Condition	Years of Service	Present Location

DPP-FS—64 75
Approved 5/7/75
Revised 3/18/08

Give Condensed Current Financial Statement

Condition at Close of Business — **Date**

ASSETS	Dollars	Cents
1. Cash (a) on hand $ ..... (b) In Bank $.....		
(c) Elsewhere $.....		
(d) Total Cash $.....		
2. Notes receivable (a) Due within 90 days		
(b) Due after .....days		
(c) Past due		
3. Accounts receivable from completed contracts, exclusive of claims not approved for payment		
4. Sums earned on uncompleted contracts as shown by Engineer's or Architect's estimate		
(a) Amount receivable after deducting retainage		
(b) Retainage to date due to upon commencement of Contracts		
5. Accounts receivable from source other then commencement of Contracts.....		
6. Deposits for bids or other guarantees:		
(a) Recoverable within ..... days.....		
(b) Recoverable after ..... days		
7. Interest accrued on loan, securities, etc.		
8. Real estate (a) Used for business purposes		
(b) Not used for business purposes		
9. Stocks and Bonds (a) Listed – present market value		
(b) Unlisted – present value		
10. Materials in stock not included in Item 4		
(a) For uncompleted controls (present value)		
(b) Other materials (present value)		
11. Equipment, book value		
12. Furniture and fixtures, book value		
13. Other assets		
TOTAL ASSETS		
LIABILITIES		
1. Notes payable (a) To banks regular		
(b) To bank for certified checks		
(c) To others for equipment obligations		
(d) To others exclusive of equipment obligations		
2. Accounts payable (a) Not past due		
(b) Past due		
3. Real Estate encumbrances		
4. Other Liabilities		
5. Reserves		
6. Capital stock paid up (a) Common		
(b) Common		
(c) Preferred		
(d) Preferred		
7. Surplus (net worth) Earned $.....		
Unearned $.....		
TOTAL LIABLITIES		

GIVE CONDENSED CURRENT FINANCIAL STATEMENT Cont.

CONTINGENT LIABILITIES		
1. Liability on notes receivable, discounted or sold		
2. Liability on accounts receivable, pledged, assigned or sold		
3. Liability s bondman		
4. Liability as guarantor on contracts or on accounts of others		
5. Other contingent liabilities		
TOTAL CONTINGENT LIABILITIES		

include all amounts owing subcontractors for all work in placed and accepted on completed and uncompleted contracts, including retainage.

This is to certify that the information herein reported is to the best of our knowledge true and accurate.

.....
Name of Company

.....
Print Name

.....
Signature

.....
Telephone Number / Cell Phone Number

STANDARD FORM NO P & P-GP-15-73
APPROVED 3-26-73
COMM OF PROP & PROC
REVISED 3-18-08

GENERAL PROVISIONS
(CONSTRUCTION CONTRACT)

1. DEFINITIONS

(a) The term "Contracting Officer" as used herein means the person executing this contract on behalf of the Government and includes a duly appointed successor or authorized representative.

2. SPECIFICATIONS AND DRAWINGS

The Contractor shall keep on the work a copy of the drawings and specifications and shall at all times give the Contracting Officer access thereto. Anything mentioned in the specifications and not shown on the drawings, or shown on the drawings and not mentioned in the specifications, shall be of like effect as if shown or mentioned in both. In case of difference between drawings and specifications, the specifications shall govern. In case of discrepancy either in the figures, in drawings, or in the specifications, the matter shall be promptly submitted to the Contracting Officer, who shall promptly make a determination in writing. Any adjustment by the Contractor without such determination shall be at his own risk and expense. The Contracting Officer shall furnish from time to time such detail drawings and other information as he may consider necessary, unless otherwise provided.

3. CHANGES

(a) The Contracting Officer may, at any time, without notice to the sureties, by written order designated or indicated to be change order, make any change in the work in the general scope of the contract, including but not limited to changes:

(i) In the specifications (including drawings and designs):

(ii) In the method or manner of performance of the work;

(iii) In the Government-furnished facilities, equipment, materials, services, or site, or

(iv) directing acceleration in the performance of the work.

(b) Any other written order or an oral order (which terms as used in this paragraph (b) shall include direction, instruction, interpretation, or determination) from the Contracting Officer, which causes any such change, shall be treated as a change order under this clause, provided that the Contractor gives the Contracting Officer written notice stating the date, circumstances, and source of the order and that the Contractor regards the order as a change order.

(c) Except as herein provided, no order, statement, or conduct of the Contracting Officer shall be treated as a change under this clause or entitle the Contractor to an equitable adjustment hereunder.

(d) If any change under this clause causes an increase or decrease in the Contractor's cost of, or the time required for, the performance of any part of the work under this contract, whether or not changed by any order, an equitable adjustment shall be made and the contract modified in writing accordingly: Provided, however, That except for claims based on defective specifications, no claim for any change under (b) above shall be allowed for any costs incurred more than 20 days before the Contractor gives written notice as therein required: And provided further, That in the case of defective specifications for which the Government is responsible, the equitable adjustment shall include any increase cost reasonably incurred by the Contractor in attempting to comply with such defective specifications.

(e) If the Contractor intends to assert a claim for an equitable adjustment under this clause, he must, within 30 days after receipt of a written change order under (a) above or the furnishing of a written notice under (b) above, submit to the Contracting Officer a written statement setting forth the general nature and monetary extent of such claim, unless this period is extended by the Government. The statement of claim hereunder may be included in the notice under (b) above.

(f) No claim by the Contractor for an equitable adjustment hereunder shall be allowed if asserted after final payment under this contract.

4. DIFFERING SITE CONDITIONS

(a) The Contractor shall promptly, and before such conditions are disturbed, notify the Contracting Officer in writing of: (1) Subsurface or latent physical conditions at the site differing materially from those indicated in this contract, or (2) unknown physical conditions at the site, of an unusual nature, differing material from those ordinarily encountered and generally recognized as inhering in work of the character provided for in this contract. The Contracting Officer shall promptly investigate the conditions, and if he finds that such conditions do materially so differ and cause an increase or decrease in the Contractor's cost of, or the time required for, performance of any part of the work under this contract, whether or not changed as a result such conditions, an equitable adjustment shall be made and the contract modified in writing accordingly.

(b) No claim of the Contractor under this clause shall be allowed unless the Contractor has given the notice required in (a) above; provided, however, the time prescribed therefore may be extended by the Government.

(c) No claim by the Contractor for an equitable adjustment hereunder shall be allowed if asserted after final payment under this contract.

5. TERMINATION FOR DEFAULT—DAMAGES FOR DELAY—TIME EXTENSIONS

(a) If the Contractor refuses or fails to prosecute the work, or any separable part thereof, with such diligence as will insure its completion within the time specified in this contract, or any extension thereof, or fails to complete said work within such time, the Government may, by written notice to the Contractor,

terminate his right to proceed with the work of such part of the work as to which there has been delay. In such event the Government may take over the work and prosecute the same to completion, by contract or otherwise, and may take possession of and utilize in completing the work such materials, appliances, and plant as may be on the site of the work necessary therefore. Whether or not the Contractor's right to proceed with the work is terminated, he and his sureties shall be liable for any damage to the government resulting from his refusal or failure to complete the work within the specified time.

(b) If fixed and agreed liquidated damages are provided in the contract and if the Government so terminates the Contractor's right to proceed, the resulting damage will consist of such liquidated damages until such reasonable time as may be required for final completion of the work together with any increased costs occasioned the Government in completing the work.

(c) If fixed and agreed liquidated damages are provided in the contract and if the Government does not so terminate the Contractor's right to proceed, the resulting damage will consist of such liquidated damages until the work is completed or accepted.

(d) The Contractor's right to proceed shall not be so terminated nor the Contractor charged with resulting damage if:

(1) The delay in the completion of the work arises from unforeseeable causes beyond the control and without the fault or negligence of the Contractor, including but not restricted to, acts of God, acts of the public enemy, acts of the Government in either its sovereign or contractual capacity, acts of another contractor in the performance of a contract with the Government, fires, floods, epidemics, quarantine restrictions, strikes, freight embargoes, unusually severe weather, or delays of subcontractors or suppliers arising from unforeseeable causes beyond the control and without the fault or negligence of both the Contractor and such subcontractors or suppliers; and

(2) The Contractor, within 10 days from the beginning of such delay (unless the Contracting Officer grants a further period of time before the date of final payment under the contract,) notifies the Contracting Officer in writing of the causes of delay.

The Contracting Officer shall ascertain the facts and the extent of any delay and extent the time for completing the work when, in his judgment, the findings of facts justify such an extension, and his findings of fact shall be final and conclusive on the parties, subject only to appeal as provided in Clause 6 of these General Provisions.

(e) If, after notice of termination of the Contractor's right to proceed under the provisions of this clause, it is determined for any reason that the Contract was not in default under the provisions of this clause, or that the delay was excusable under the provisions of this clause, the rights and obligations of the parties shall, if the contract contains a clause provided for termination for convenience of the Government, be the same as if the notice for termination had been issued pursuant to such clause. If, in the foregoing circumstances, this contract does not contain a clause providing for termination for convenience of the Government, the contract shall be equitable adjusted to compensate for such termination and the contract modified accordingly; failure to agree to any such adjustment shall be a dispute concerning a question of fact within the meaning of the clause of this contract entitled "Disputes."

(f) The rights and remedies of the Government provided in this clause are in addition to any other rights and remedies provided by law or under this contract.

(g) As used in Paragraph (d) (1) of this clause, the term 'Subcontractors or Suppliers' means Subcontractors or Suppliers at any tier.

6. DISPUTES

(a) Except as otherwise provided in this contract, any dispute concerning a question of fact arising under this contract which is not disposed of by agreement shall be decided by the Contracting Officer, who shall reduce his decision to writing and mail or otherwise furnish a copy thereof to the Contractor. The decision of the Contracting Officer shall be final and conclusive unless, within 30 days from the date of receipt of such copy, the Contractor mails or otherwise furnishes to the Contracting Officer a written appeal addressed to the head of the Agency involved. The decision of the head of the agency or his duly authorized representative for the determination if such appeals shall be final and conclusive. This provision shall not be pleaded in any suit involving a question of fact arising under this contract as limited judicial review of any such decision to cases where fraud by such official or his representative or board is alleged: **Provided, however,** That any such decision shall be final and conclusive unless the same is fraudulent or capricious or arbitrary or so grossly erroneous as necessarily to imply bad faith or is not supported by substantial evidence. In connection with any appeal proceeding under this clause, the Contractor shall be afforded an opportunity to be heard and to offer evidence in support of his appeal. Pending final decision of a dispute hereunder, the Contractor shall proceed diligently with the performance of the contract and in accordance with the Contracting Officer's decision.

(b) This Disputes clause does not preclude consideration of questions of law in connection with decisions provided for in paragraph (a) above. Nothing in this contract, however, shall be constructed as making final the decision of any administrative official, representative, or board on a question of law.

7. PAYMENTS TO CONTRACTOR

(a) The government will pay the contractor price as hereinafter provided.

(b) The Government will make progress payments monthly as the work proceeds, or at more frequent intervals as

determined by the Contracting Officer, on estimates approved by the Contracting Officer. If requested by the Contracting Officer, the Contractor shall furnish a break down of the total contract price showing the amount included therein for each principal category of the work, in such detail as requested, to provide a basis of determining progress payments. In the preparation of estimates the Contracting Officer, at his discretion, may authorize material delivered on the site and preparatory work done to be taken into consideration. Material delivered to the Contractor at locations other than the site may also be taken into consideration (1) if such consideration is specifically authorized by the contract and (2) if the Contractor furnishes satisfactory evidence that he has acquired title to such material and that it will be utilized on the work covered by this contract.

(c) In making such progress payments, there shall be retained 10 percent of the estimated amount until final completion and acceptance of the contract work. However, if the Contracting Officer, at any time after 50 percent of the work has been completed, finds that satisfactory progress is being made, he may authorize any of the remaining progress payments to be made in full. Also, whenever the work is substantially complete, the Contracting Officer, if he considers the amount retained to be in excess of the amount adequate for the protection of the Government, at his discretion, may release to the Contractor all or a portion of such excess amount. Furthermore, on completion and acceptance of each separate building, public work, or other division of the contract, on which the price is stated separately in the contract, payment may be made therefore without retention of a percentage.

(d) All material and work covered by progress payments made shall thereupon become the sole property of the Government, by this provision shall not be construed as relieving the Contractor from the sole responsibility for all material and work upon which payments have been made or the restoration of any damaged work, or a waiving the right of the Government to acquire the fulfillment of all the terms of the contract.

(e) Upon completion and acceptance of all work, the amount due to the Contractor under this contract shall be paid upon the presentation of a properly executed voucher and after the Contractor shall have furnished the Government with a release, if required, of all claims against the Government arising by virtue of this contract, other than claims in stated amounts as may be specifically excepted by the Contractor from the operation of the release. If the Contractor's claim to amounts payable under the contract has been assigned under the Assignment of Claims Act of 1940, as amended (31 U.S.C. 203, 41 U.S.C. 15), a release may also be required of the assignee.

8. ASSIGNMENT OF CLAIMS

(a) If this contract provides from payments aggregating $1,000 or more, claims for moneys due or to become due to the Contractor from the Government under this contract may be assigned to a bank, trust company, or other financial institution, including any Federal lending agency and may thereafter be further assigned and reassigned to any such institution. Any such assignment or reassignment shall cover all amounts payable under this contract and not already paid, and shall not be made to more than one party, except that any such assignment or reassignment may be made to one party as agent or trustee for two or more parties participating in such financing. Unless otherwise provided in this contract, payments to an assignee of any moneys due to become due under this contract shall not, to the extent provided in said Act, as amended, be subject to reduction or setoff.

9. MATERIAL AND WORKMANSHIP

(a) Unless otherwise specifically provided in this contract, all equipment, material, and articles incorporated in the work covered by this contract are to be new and of the most suitable grade for the purpose intended. Unless otherwise specifically provided in this contract, reference to any equipment, material, article, or patented process, by trade name, make, or catalog number, shall be regarded as establishing a standard of quality and shall not be construed as limited competition, and the Contractor may, at his option, use any equipment, material, article, or process which, in the judgment of the Contracting Officer is equal to that named. The Contractor shall furnish to the Contracting Officer for his approval the name of the manufacturer, the model number, and other identifying data and information respecting the performance, capacity, nature, and rating of the machinery and mechanical and other equipment which the Contractor contemplates incorporating in the work. When required by this contract or when called for by the Contracting Officer, the Contractor shall furnish the Contracting Officer for approval full information concerning the material or articles which he contemplated incorporating in the work. When so directed, samples shall be submitted for approval at the Contractor's expense, with all shipping charges prepaid. Machinery, equipment, material, and articles installed or used without required approval shall be at risk of subsequent rejection.

(b) All work under this contract shall be performed in a skillful and workmanlike manner. The Contracting Officer may, in writing, require the Contractor to remove from the work any employee the Contracting Officer deems incompetent, careless, or otherwise objectionable.

10. INSPECTION AND ACCEPTANCE

(a) Except as otherwise provided in this contract, inspection and test by the Government of material and workmanship required by this contract shall be made at reasonable times and at the site of the work, unless the Contracting Officer determines that such inspection or test of material which is to be incorporated in the work shall be made at the place of production, manufacture, or shipment of such material. To the extent specified by the Contracting Officer at the time of determining to make off-site inspection or test, such inspection or test shall be conclusive as to whether the material involved conforms to the contract requirements. Such off-site inspection or test shall not relieve the Contractor of responsibility for

damage to or loss of the material prior to acceptance, nor in any way affect the continuing rights of the Government after acceptance of the completed work under the terms of paragraph (f) of this clause, except as hereinabove provided.

(b) The Contractor shall, without charge, replace any material or correct any workmanship found by the Government not to conform to the contract requirements, unless in the public interest the Government consents to accept such material or workmanship with an appropriate adjustment in contract price. The Contractor shall promptly segregate and remove rejected material from the premises.

(c) If the Contractor does not promptly replace rejected material or correct rejected workmanship, the Government (1) may, by contract or otherwise, replace such material or correct such workmanship and charge the cost thereof to the Contractor, or (2) may terminate the Contractor's right to proceed in accordance with Clause 5 of these General Provisions.

(d) The Contractor shall furnish promptly, without additional charge, all facilities, labor, and material reasonably needed for performing such safe and convenient inspection and test as may be required by the Contracting Officer. All inspection and test by the Government shall be performed in such manner as not unnecessarily to delay the work. Special, full size, and performance tests shall be performed as described in this contract. The Contractor shall be charged with any additional cost of inspection when material and workmanship are not ready at the time specified by the Contractor for its inspection.

(e) Should it be considered necessary or advisable by the Government at any time before acceptance of the entire work to make an examination of work already completed, by removing or tearing out same, the Contractor shall, on request, promptly furnish all necessary facilities, labor, and material. If such work is found to be defective or nonconforming in any material respect, due to the fault of the Contractor or his subcontractors, he shall defray all the expenses of such examination and of satisfactory reconstruction. If, however, such work is found to meet the requirements of the contract, an equitable adjustment shall be made in the contract price to compensate the Contractor for the additional services involved in such examination and reconstruction and, if completion of the work has been delayed thereby, he shall, in addition, be granted suitable extension of time.

(f) Unless otherwise provided in this contract, acceptance by the Government shall be made as promptly as practicable after completion and inspection of all work required by this contract. Acceptance shall be final and conclusive except as regards latent defects, fraud, or such gross mistakes as may amount to fraud, or as regards the Government's rights under any warranty or guarantee.

11. SUPERINTENDENCE BY CONTRACTOR

The Contractor shall give his personal superintendence to the work or have a competent foreman or superintendent, satisfactory to the Contracting Officer, on the work at all times during progress, with authority to act for him.

12. PERMITS AND RESPONSIBILITIES

The Contractor shall, without additional expense to the Government, be responsible for obtaining any necessary licenses and permits, and for complying with any applicable Federal, State, and municipal laws, codes, and regulations, in connection with the prosecution of the work. He shall be similarly responsible for all damages to persons or property that occur as a result of his fault or negligence. He shall take proper safety and health precautions to protect the work, the workers, the public, and the property of others. He shall also be responsible for all materials delivered and work performed until completion and acceptance of the entire construction work, except for any completed unit of construction thereof which therefore may have been accepted.

13. CONDITIONS AFFECTING THE WORK

The Contractor shall be responsible for having taken steps reasonably necessary to ascertain the nature and location of the work, and the general and local conditions which can affect the work or the cost thereof. Any failure by the Contractor to do so will not relieve him from responsibility for successfully performing the work without additional expense to the Government. The Government assumes no responsibility for any understanding or representations concerning conditions made by any of its officers or agents prior to the execution of this contract, unless such understanding or representations by the Government are expressly stated in the contract.

14. OTHER CONTRACTS

The Government may undertake or award other contracts for additional work, and the contractor shall fully cooperate with such other contactors and Government employees and carefully fit his own work to such additional work as may be directed by the Contracting Officer. The Contractor shall not commit or permit any act which will interfere with the performance of work by any other contractor or by Government employees.

15. PATENT INDEMNITY

Except as otherwise provided, the Contractor agrees to indemnify the Government and its officers, agents, and employees against liability, including costs and expenses, arising out of the performance of this contract or out of the use or disposal by or for the account of the Government of suppliers furnished or construction work performed hereunder.

16. ADDITIONAL BOND SECURITY

If any surety upon a bond furnished in connection with this contract becomes unacceptable to the Government, or if any such surety fails to furnish reports as to his financial condition from time to time as requested by the Government, the Contractor shall promptly furnish such additional security as may be required from time to time to protect the interests of Government and of persons supplying labor or materials in the prosecution of the work contemplated by this contract.

17. COVENANT AGAINST CONTIGENT FEES

The Contractor warrants that no person or selling agency has been employed or retained to solicit or secure this contract upon an agreement or understanding for a commission, percentage, brokerage, or contingent fee, excepting bona fide employees or bona fide established commercial or selling agencies maintained by the Contractor for the purpose of securing business. For breach or violation of this warranty the Government shall have the right to annul this contract without liability or in its discretion to deduct from the contract price or consideration, or otherwise recover, the full amount of such commission, percentage, brokerage, or contingent fee.

18. OFFICIALS NOT TO BENEFIT

No member of the Legislature or members of Congress shall be admitted to any share or part of this contract, or to any benefit that may arise there from; but this provision shall not be construed to extend to this contract if made with a corporation for its general benefit.

19. UTILIZATION OF SMALL BUSINESS CONCERNS

(a) It is the policy of the Government as declared by the Legislature that a fair proportion of the purchases and contracts for suppliers and services for the Government be placed with small business concerns.

(b) The Contractor agrees to accomplish the maximum amount of subcontracting to small business concerns that the Contractor finds to be consistent with the efficient performance of this contract.

20. SUSPENSION OF WORK

(a) The Contracting Officer may order the Contractor in writing to suspend, delay, or interpret all or any part of the work for such period of time as he may determine to be appropriate for the convenience of the Government.

(b) If the performance of all or any part of the work is, for an unreasonable period time, suspended, delayed, or interrupted by an act of the Contracting Officer in the administration of this contract, or by his failure to act within the time specified in this contract (or if no time is specified, within a reasonable time), an adjustment shall be made for any increase in the cost of performance of this contract (excluding profit) necessarily caused by such unreasonable suspension, delay, or interruption and the contract modified in writing accordingly. However, no adjustment shall be made under this clause for any suspension, delay, or interruption to the extent (1) that performance would have been so suspended, delayed, or interrupted by any other cause, including the fault or negligence of the Contractor or (2) for which an equitable adjustment is provided for or excluded under any other provision of this contract.

(c) No claim under this clause shall be allowed (1) for any costs incurred more than 20 days before the Contactor shall have notified the Contracting Officer in writing of the act or failure to act involved (but this requirements shall not apply as to a claim resulting from a suspension order), and (2) unless the claim, in an amount stated, is asserted in writing as soon as practicable after the termination of such suspension, delay, or interruption but not later than the date of final payment under the contract.

TERMINATION OF CONTRACTS

———0———

CONVENIENCE OF THE GOVERNMENT

(a) The performance of work under this contract may be terminated by the Government in accordance with this clause in whole, or from time to time in part, whenever the Contracting Officer shall determine that such termination is in the best interest of the Government. Any such termination shall be effected by delivery to the Contractor of a Notice of Termination specifying the extent to which performance by delivery to the Contractor of a Notice of Termination specifying the extent to which performance of work under the contract is terminated, and the date upon which such termination becomes effective.

(b) After receipt of a Notice of Termination, and except as otherwise directed by the Contracting Officer, the Contractor shall:

(i) stop work under the contract on the date and to the extent specified in the Notice of Termination;

(ii) place no further orders or subcontracts for materials, services or facilities, except as may be necessary for completion of such portion of the work under the contract as is not terminated;

(iii) terminate all orders and subcontracts to the extent that they relate to the performance of work terminated by the Notice of Termination;

(iv) assign to the Government, in the manner, at the times, and to the extent directed by the Contracting Officer, all of the right, title, and interest of the Contractor under the orders and subcontracts so terminated, in which case the Government shall have the right, in its discretion, to settle or pay any or all claims arising out of the termination of such orders and subcontracts;

(v) settle all outstanding liabilities and all claims arising out of such termination of orders and subcontracts, with the approval or ratification of the Contracting Officer, to the extent, he may require, which approval or ratification shall be final for all the purposes of this clause;

(vi) transfer title ad deliver to the Government in the manner, at the times, and to the extent, if any, directed by the Contracting Officer (A) the fabricated or unfabricated parts, work in progress, completed work, supplies, and other material produced as a part of, or acquired in connection with the performance of, the work terminated by the Notice of Termination, and (B) the completed or partially completed plans, drawings, information,

and other property which, if the contract had been completed, would have been required to be furnished to the Government.

(vii) use his best efforts to sell, in the manner, at the times, to the extent, and at the price or prices directed or authorized by the Commissioner of Property and Procurement, any property of the types referred to in (vi) above; provided, however, that the Contractor (A) shall not be required to extend credit to any purchaser, and (B) may acquire any such property under the conditions prescribed by and at the price or prices approved by the Commissioner of Property and Procurement and provided further that the proceeds of any such transfer or disposition shall be applied in reduction of any payments to be made by the Government to the Contractor under this contract or shall otherwise be credited to the price or cost of the work covered by this contract or paid in such other manner as the Commissioner of Property and Procurement may direct;

(viii) complete performance of such part of the work as shall not have been terminated by the Notice of Termination; and

(ix) take such action as may be necessary, or as the Commissioner of Property and Procurement may direct, for the protection and preservation of the property related to this contract which is in the possession of the Contractor and in which the Government has or may acquire an interest.

(c) After receipt of the Notice of Termination, the Contractor shall submit to the Commissioner of Property and Procurement his termination claim, in the form and with certification prescribed by the Commissioner of Property and Procurement. Such claim shall be submitted promptly but in no event later than one year from the effective date of termination, unless one or more extensions in writing are granted by the Commissioner of Property and Procurement, upon request of the Contractor made in writing within such one year period or authorized extension thereof. However, if the Commissioner of Property and Procurement determines that the facts justify such action, he may receive and act upon failure of the Contractor to submit his termination claim within the time allowed, the Commissioner of Property and Procurement may determine, on the basis of information available to him, the amount, if any, due to the Contractor by any reason of the termination and shall thereupon pay to the Contractor the amount so determined.

(d) Subject to the provisions of paragraph (c), the Contractor and the Commissioner of Property and Procurement may agree upon the whole or any part of the amount or amounts to be paid to the Contractor by reason of the total or partial termination of work pursuant to this clause, which amount or amounts may include a reasonable allowance for profit on work done; provided, that such agreed amount or amounts, exclusive of settlement costs, shall not exceed the total contract price as reduced by the amount of payments otherwise made and as further reduced by the contract price of work not terminated. The contract shall be amended accordingly, and the Contractor shall be paid the agreed amount. Nothing in paragraph (e) of this clause, prescribing the amount to be paid to the Contractor in the event of failure of the Contractor and the Commissioner of Property and Procurement to agree upon the whole amount to be paid to the Contractor by reason of the termination of work pursuant to this

clause, shall be deemed to limit, restrict or otherwise determine or affect the amount or amounts which may be agreed to be paid to the Contractor pursuant to this paragraph (d):

(e) In the event of the failure of the Contractor and the Commissioner of Property & Procurement to agree as provided in paragraph (d) upon the whole amount to be paid to the Contractor by reason of the termination of work pursuant to this clause, the Commissioner of Property & Procurement shall pay to the Contractor the amounts determined by him as follows, but without duplication of any amounts agreed upon in accordance with paragraph (d):

(i) for completed supplies, materials and equipment or services accepted by the Government (or sold or acquired as provided in paragraph (b) (vii) above) and not theretofore paid for, a sum equivalent to the aggregate price for such supplies or services computed in accordance with the price or prices specified in the contract, appropriately adjusted for any saving for freight or other charges;

(ii) the total of —

(A) the costs incurred in the performance of the work terminated, including initial costs and preparatory expense allocable thereto, but exclusive of any costs attributable to supplies or services paid or to be paid for under paragraph (e) (i) hereof;

(B) the cost settling and paying claims arising out of the termination of work under subcontracts or orders, as provided in paragraph (b) (v) above, which are properly chargeable to the terminated portion of the contract (exclusive of amounts paid or payable on account of supplies or materials delivered or services furnished by subcontractors or vendors prior to the effective date of the Notice of Termination, which amounts shall be included in the costs payable under (A) above; and

(C) a sum, as profit on (A) above, determined by the Contracting Officer to be fair and reasonable; provided, however, that if it appears that the Contractor would have sustained a loss on the entire contract had it been completed, no profit shall be included or allowed under this subdivision (C) and an appropriate adjustment shall be made reducing the amount of the settlement to reflect the indicated rate of loss; and

(iii) the reasonable costs of settlement, including accounting, legal, clerical and other expenses reasonably necessary for the preparation of settlement claims and supporting data with respect to the terminated portion of the contract and for the termination and settlement of subcontract thereunder, together with reasonable storage, transportation and other costs incurred in connection with the protection or disposition of property allocable to this contract.

GENERAL INFORMATION
FOR
BIDDERS ON GOVERNMENT CONSTRUCTION PROJECTS

—— 0 ——

Authority:

Title 31, Section 236 of the Virgin Islands Code, expressly confers upon the Commissioner of Property and Procurement the power to contract for and on behalf of the Government of the Virgin Islands. This authority has been delegated to a limited extent, in accordance with 31 VIC 250 (a), to certain officials of the Department of Property and Procurement.

It is the bidder's responsibility to learn the limitations of an agent's authority. Since the Government does not exist as a person, its function must of necessity be carried out by agents, and it can . . . as a rule of thumb . . . be held liable **only** if these agents are authorized to act . . . and if they act . . . within the limitations of their authority. Hence, always be sure that the person with whom you are dealing has the authority to act.

Invitation to Bids:

Public Projects are generally performed following public notices and advertisement; competitive bidding, and awarding of a contract therefor. Bidding documents including plans and specifications, together with specific and detailed instructions, are generally purchasable for a fee and may often be obtained at the Main Offices of the Department of Property and Procurement.

In order for a proposal to receive consideration it must conform to the advertisement and specifications and be clear and positive so that the Commissioner may determine therefrom exactly what the bidder proposes to do and the price therefor. Before filing a proposal, a bidder should read Form No. DPP-ITB-CC-16-73 (Instructions to Bidders—Construction Contracts) and all supplementary instructions. You are urged to familiarize yourself with Form No. DPP-GP-15-73 (General Provisions, Construction Contract.)

Purpose of Competition

The underlying purpose for requiring competitive bidding is to promote and encourage competition and to guard against favoritism, improvidence, extravagance, fraud and corruption. Of equal importance is the desire to secure the best work at a cost considered most advantageous to the Government, quality offered, delivery terms and service reputation taken into consideration.

Competitive bidding is for the benefit of taxpayers **and not for the benefit or enrichment of bidders** and the statute will be so administered in order to accomplish this purpose fairly and reasonably with the sole reference to the public interest.

Upon previously satisfying certain prerequisites all parties claiming the ability to perform the advertised contract will be allowed to compete freely without any unreasonable restrictions. Every element which enters into the competitive scheme will be applied and required equally for all and will not be left to the volition of any individual aspirant.

Opening and Recording of Bids:

At the hour and date previously set the bids will be "publicly opened" and full disclosure thereof made and recorded. Bids are generally . . . but not statutorily required to be . . . read

aloud. Thus, the reading will be confined to pertinent information such as the name of the bidder (whether or not he is a preferred bidder), address, period allowed for acceptance, discount for prompt payment, price, and time of delivery.

Any bidder or his authorized representative, the general public, the press and any others having a legitimate interest will be permitted to inspect and copy the original record of the bids. None of the records will be allowed to pass out of the hand of the official charged with conducting the bid opening.

Acceptance or Rejecting of Proposals

Bids may be rejected on the basis of an administrative determination that rejection is in the best interest of the Government. This power will be exercised with a great deal of caution, prudence and good faith and under clear and unmistakable guidelines heretofore established.

Award under a formal advertisement will be made to the bidder offering the most advantageous service to the Government, quality offered, delivery terms and service reputation taken into consideration. There are three (3) elements to eligibility for award: (a) responsiveness to the bid; (b) responsibility of the bidder and (c) price, "quality offered, delivery terms and service reputation."

Definition of Elements:

(a) Responsiveness to the bid specifications:
Bid must meet all requirements specified therein. Bid must not contain any restrictions or qualifications beyond those stipulated in the Invitation.

(b) Responsibility of the Bidder:
Bidder must have the facilities technical capability and financial resources to complete contract in accordance with the terms of the Invitation.

(c) Price reasonableness, "quality offered, delivery terms and service reputation."
All costs must be included. Your bid is your formal offer to supply the require items at the price you indicate and on the terms we specify. Don't promise deliveries cannot fulfill. Past performance will be thoroughly checked prior to the awarding of any contract.

A bid generally will be considered "responsive" if it constitutes a definite, final and unqualified offer to meet the **material** terms of the invitation. A material term is that which could affect price, quality, quantity or delivery or is clearly required by the terms of the invitation to bid and non-compliance therewith is regarded as fatal to the bid for reasons of policy.

Minor informalities will be ignored. A minor informality is a non-conformity which is merely a matter of form or is some non-essential variation. Refer to our Purchasing Manual of Procedures for detailed information.

The Contract

After the bids have been fully evaluated and a determination made there follows the actual acceptance by the Government and notification to the successful bidder. Thereafter a written contract is executed by the parties.

The written contract will generally embody and include by reference the Advertisement, Proposal, Contract Bonds, General Provisions, Special Provisions and Plans and Specifications.

May 1974
Revised 3-18-08

Notice to Proceed and all Work Orders will then follow.

If the successful bidder, after being notified of the award and tender of the written contract, fails to execute same within the period set the Government may annul same and in such case the bid deposit will be forfeited and become the property of the Government.

Operation and Administration of Contract

The contractor is wholly responsible for the timely and satisfactory performance of the contract. He should either have adequate working capital or have a reasonably sound arrangement for obtaining such capital. Sufficient working capital is the contractor's problem and lack of such capital **will not** constitute an excusable cause for delay. Additionally, the contractor must have the proper staff and necessary equipment to perform the contract.

Strict Compliance

The Government is ordinarily entitled to get the construction features it has specified. It is not within the province of the contractor to substitute his judgment by determining that something different is suitable. Government officials who are not technically authorized to issue either formal or constructive Change Orders do not generally hesitate to do so. Fortunately, there is a good, practical and legal solution to this problem. Immediately consult with the Commissioner **or his duly authorized representative.**

An inspector is not generally authorized to make a contract change. Only the Contracting Officer—the Commissioner of the Department of Property and Procurement.

Changes and Differing Site Conditions

These provisions are without doubt the most significant features of a Government Contract. By these provisions the Government can unilaterally change the contract and hold the contractor to performance as changed.

You are therefore urged to read and re-read Section 3 and 4 of the General Provisions of your Contract.

The Differing Site Conditions Clause —Section 4 of the General Provisions—is new. It provides a clear course of action which if followed by the contractor could remove one element of gambling.

Disputes and Remedies

Section 6 of the General Provisions provides a workable machinery for the asserting and settling of **bona fide** controversies which may arise under the contract. The clause provides the oil which lubricates the entire machinery of Government Contracts.

The very structure of a Government Contract places the burden on the Contractor.

After receipt of a Change Order—or a constructive change order—you are legally required by the contract to proceed with the work as changed, and to fight out the question of compensation later through the Disputes Clause, no matter how long that may take or how difficult it may be. If you fail to perform the changed work, you may be terminated for default, unless, of course the work is impossible to perform.

In order to recover for the cost of financing the Changed Work you should assert your claim as promptly as possible. A prompt assertion of claim will protect you if done within the

specified time period.

Remember always an assertion of-claim must be filed personally with the contracting officer or his authorized representative. No magic language is necessary to assert a claim. A simple notice of intent may as a rule of thumb be sufficient. Oral notice of claims should always be supplemented in writing.

The disputes clause is included in the contract purposefully and is intended, absent fraud or bad faith, to provide a quick and efficient administrative remedy and to avoid vexatious and expensive litigations.

Termination for Default—Damages for Delay—Time Extensions

In Government Contracts, time is of the essence. If a contractor refuses or fails to: (i) make progress; (ii) perform, or (iii) complete the project within the time specified, he has in essence breached the contract. This gives the Government the right to cancel—that is terminate—the contract.

Subparagraphs (b) and (c) of Section 5 of this Clause set forth the damages to which the Government is entitled if the default termination is valid and upheld. In addition to excess costs, the Government may also recover **administrative costs** and other **direct** damages. These kinds of damages are not covered by subparagraph (b). They may only be recovered as "other remedies" under subparagraph (g).

"Excusable Delay" is permitted under subparagraph (d). The excuses granted in this clause are generally **far more liberal** than those generally accorded to delinquent contractors in commercial contracts.

The provisions under subparagraph (e) have been included **to prevent** the contractor from obtaining **breach of contract damages** in the event the termination for default was improper for any reason whatsoever.

Subparagraph (g) is a "catchall" provision. Most often, this clause is used to recoup damages other than "excess costs" provided for in subparagraphs (b) and (c).

General

Government contract imposes upon its contractors responsibilities with respect to subcontractors. These require suitable surveillance of subcontractors to insure proper performance.

The official spokesman of the Government of the Virgin Islands, with authority under Government Contracts, is the Commissioner of Property and Procurement and/or his duly authorized representative. Neither his superiors nor his subordinates speak with that authority. He carries a special warrant to perform that function.

The Contracting Officer (The Commissioner of the Department of Property and Procurement) will deal with the contractor on behalf of the Government in accordance with the express term of the contract and the law. He will not waive vested rights of the Government. He will include in the contract those clauses required by law or the Rules and Regulations and administer them in accordance with law.

In all matters where his discretion is to be exercised he will not function alone. He will obtain the consent to his decision of all interested advisors and counselors.

May 1974
Revised 3-18-08

GENERAL PROVISIONS

Section 22. WARRANTY OF CONSTRUCTION

(a) In addition to any other warranties set out elsewhere in this contract, the Contractor warrants that the work performed under this contract confirms to the contract requirements and is free of any defect of equipment, material or design furnished, or workmanship performed by the Contractor or any of this subcontractors and suppliers at any tier. Such warranty shall continue\e for a period of one year from the date of final acceptance of the work, but with respect to any part of the which the Government takes possession of prior to final acceptance, such warranty shall continue for a period of one year from the date the Government takes possession. Under this warranty, the Contractor shall remedy at his own expense any such failure to confirm or any such defect. In addition, the Contractor shall remedy at his own expense any damage to Government owned or controlled real or personal property, when that damage is the result of the Contractor's failure to confirm to contract requirement or any such defect of equipment, material, workmanship, or design. The Contractor shall also restore any work damaged repaired or replaced hereunder will run for one year from the date of such repair or replacement.

(b) The Government shall notify the Contractor in writing within a reasonable time after the discovery of any failure, defect, or damage.

(c) Should the Contractor fail to remedy any failure, detect, or damage described in (a) above within a reasonable time after receipt of notice thereof the Government shall have the right to replace, repair, or otherwise remedy such failure, defect, or damage at the Contractor's expense.

(d) In addition to the rights and remedies provided by this clause, all sub-contractor's, manufactures', and suppliers', warranties expressed or implied, respecting any work and materials shall at the direction of the Government, be enforced by the Contractor for the benefit of the Government. In such case if the Contractor's warranty under (a) above has expired, any suit directed by the Government to enforce a subcontractors, manufactures or suppliers warranty shall be at the expense of the Government. The Contractor shall obtain any warranties which the subcontractors, manufacturers, or suppliers would give in normal commercial practice.

(e) If directed by the Contracting Officer, the Contractor shall require any such warranties to be executed to the Government.

(f) Notwithstanding any other provision of this clause, unless such a defect is caused by the negligence of the Contractor or his subcontractors or suppliers at any tier, the Contractor shall not be liable for the repair of any defects of material or design furnished by the Government nor for the repair of any damage which results from any such defect in Government furnished material or design.

(g) The warranty specified herein shall not limit the Government's rights under the Inspection and Acceptance clause of this contract with respect to latent defects, gross mistake, or fraud.

SECTIONS 242-1 THROUGH 242-108, OF THE VIRGIN ISLANDS RULES AND REGULATIONS, PUBLISHED DECEMBER 1974 GOVERNING GENERAL CONDITIONS FOR CONTRACTING FOR PUBLIC WORKS PROJECTS ARE BY THIS REFERENCE INCORPORATED IN THIS CONTRACT AS FULLY AND EFFECTIVELY AS IF SET FORTH IN DETAIL.

FORM P & P NB 14-73
APPROVED: 3-26-73
COMM OF PROP & PROC
REVISED: 3-18-08

NOTICE TO BIDDER
(Construction Contract)

IMPORTANT — PLEASE READ CAREFULLY

To insure the submission of complete bids and to avoid omissions that could result in your bid being non-responsive, please check each of the following:

1. Have you rechecked your estimate? Are all items and amounts included? ☐
2. Is bid amount entered in the proper space provided on the Bid Form (Construction Contract)? ☐
3. Have you completed all Alternates, Separated Prices and Unit Prices (if any) on Bid Form? ☐
4. Have you acknowledged receipt of all amendments (if any) issued to the specifications? ☐
5. Do your listed subcontractors meet all applicable qualifications requirements? ☐
6. Does your bid guarantee conform to the requirements of Invitation for Bids and Instructions to Bidders? ☐
7. Have you read the clause "Termination for Default - Damages for Delay - Time Extensions," General Provisions (Construction Contract), on delays and damages? ☐

   Submission and acceptance of your bid commits you to complete your contract within the time specified. The contract may provide for assessment of liquidated damages for each day's delay beyond the contract time, for which a time extension is not granted.

8. Have you familiarized yourself with the applicable contracting provisions covering Utilization of Small Business Concerns and the Small Business Subcontracting Program.

   CAUTION—LATE BIDS—Instructions to Bidders, clause entitled "Late Bids and Modifications of Withdrawals" which provides that late bids and modifications of withdrawals thereof sent through the mails ordinarily will be considered only if timely mailed by REGISTERED MAIL or by CERTIFIED MAIL for which a **POSTMARKED RECEIPT** has been obtained.

SPECIAL ATTENTION BIDDERS

ADDITIONAL INSTRUCTIONS

1. INSTRUCTION TO BIDDERS

1. General Information

This request is not to be construed as creating any contractual relationship between the Government of the Virgin Islands (GVI) and any other party. The GVI reserves the right to negotiate final contract terms with any and all firms after the bids have been received. Upon award of the contract, the Commissioner of Property and Procurement will provide a project inspector who will function as the Owner's representative and project manager. The incurred preparation expenses of this offer shall be borne solely by the bidder.

2. Insurance Requirements

The following insurance requirements must be met within ten (10) working days after notice to proceed and documentation of coverage shall be provided to the GVI:

a. CERTIFICATE OF GOVERNMENT INSURANCE COVERAGE (Submit a hard copy of current certificate.)

b. GENERAL PUBLIC LIABILITY:

1. The Contractor shall obtain, pay for, and keep in force the following insurance, effective in all localities where the Contractor may perform any work hereunder, with such carrier or carriers as shall be acceptable to the GVI. Prior to starting work hereunder, the Contractor shall deliver to the GVI certificates of insurance evidencing that such insurance is in effect and providing that the insurer will give the GVI at least 10 days written notice of any material change in or cancellation of such insurance. The copies of certificates shall be delivered to the Department of Property and Procurement.

2. Contractor's Insurance: Workmen's Compensation, including coverage for occupational diseases or equivalent required by law in any event covering all of the Contractor's employees who may be engaged directly or indirectly in any work hereunder. Certificates indicating coverage for a limited time only shall not be in compliance herewith.

3. Employer's liability (including coverage for occupational diseases), $500,000 minimum for the injury or death of any one employee in any one accident; $1,000,000 for the injury or death of more than one employee in anyone accident.

4. Comprehensive General Public Liability (including assumed by contract): Bodily injury, $1,000,000 minimum for the injury or death of any one person in an occurrence; for the injury or death of more than one person in anyone occurrence.

5. Property damage: $500,000 minimum per occurrence; $1,000,000 minimum in the aggregate. The property damage coverage shall include explosion, collapse, undermining, and damage to underground utilities.

6. Comprehensive Automobile Liability: Covering owned, hired, and other non-owned vehicles of the Contractor.

7. Bodily Injury: $500,000 minimum for the injury or death of any one person in anyone occurrence; $1,000,000 minimum for the injury or death of more than one person in anyone occurrence.

c. ADDITIONAL INSURANCE REQUIREMENTS:

1. All policies must provide for no less than 30 days written notice of cancellation or material change.

2. The GVI must be names as "Additional Insured" on all general liability and umbrella policies.

3. If any policy or insurance or any term or condition thereof shall not be satisfactory to the GVI, the Contractor shall make all reasonable efforts to secure insurance satisfactory to the GVI.

4. Nothing herein shall be construed to authorize the Contractor to secure policies of insurance not specified above, covering risks against which the GVI has insurance.

5. The Contractor shall give prompt notice to the GVI of all personal injuries and all losses of or damage to property arising out of work under this contract for which a claim might be made against the GVI and shall promptly report to the GVI all such claims of which the Contractor has notice, whether relating to matters insured or uninsured.

6. No settlement or payment of any claims for loss, injury, or damage, other matter as to which the GVI may be charged with obligation make any payment or reimbursement shall be made by the Contractor without the written approval of the GVI.

7. The General Contractor shall indemnify and save harmless the GVI and the Project Manager for and against all suits, claims, or liability on account of any injuries to persons or damage to property arising out of the negligent acts of the contractor and/or failure to comply with the terms and conditions of said Contract, whether by himself, his employees, and subcontractors, but only in respect to such injuries damages sustained during the performance and prior to the completion and acceptance of the work covered by the Contract.

3. Site Examination

a. Bidders are required to carefully examine the site, all drawings, contract documents, Bidding Requirements, Contract Forms and Technical Specifications prior to submitting their bid.

b. The Bidder shall be aware of the nature, location and general conditions of the work site. The Bidder has gained full knowledge of the working conditions and other facilities which will have bearing on the performance of Bidder's work. Any failure by the Bidder to acquaint himself with all the available information does not relieve the Bidder from any responsibility for properly performing the work.

4. Submission Logistics

The sealed envelope containing the bid must have the following information written on the outside of the envelope:

SEALED BID - DO NOT OPEN

Bid No.
(Name of Bidder)
(Mailing Address of Bidder)
(Telephone number of Bidder)
(Fax number of Bidder)
(Date of bid opening)
(Time of bid opening)

5. Conflict of Interest

A Bidder filing a bid hereby certifies that no officer, agent, or employee of GVI has a pecuniary interest in this bid or has participated in contract negotiations on behalf of GVI; that the bid is made in good faith without fraud, collusion, or connection of any kind with any other Bidder for the same request for bids; the Bidder is competing solely in its own behalf without connection with, or obligation to, any undisclosed person or firm.

The GVI reserves the right to accept or reject any and all bids or to waive any informalities in the bid process or have the work performed by other means.

II. GENERAL TERMS AND CONDITIONS APPLICABLE AFTER AWARD OF CONTRACT

1. Payroll Documents

a. The Contractor and subcontractor shall comply with all rulings and interpretations of the **Davis-Bacon Act** (40 USC 276a-5) and related Acts contained in 29 CFR, Parts 1, 3, and 5.

2. Safety

a. The Contractor shall maintain an adequate safety program to insure the safety of contractor employees, subcontractor employees, and all other individuals working under this contract. The Virgin Islands Occupational Safety and Health Act (OSHA) provides for safety and health protection for employees on the job. The contractor is required to comply with the OSHA standards. In addition, the contractor must also provide the GVI with a written safety program that he intends to follow in pursuing work under this contract. No work under this contract will be permitted until the GVI is assured that the contractor has an adequate safety program in effect.

3. Subcontractors and Suppliers

a. No portion of the work shall be subcontracted without prior written consent of the GVI. In the event that the contractor desires to subcontract some part of the work specified herein, the contractor shall furnish the GVI the names, qualifications and experience of their proposed subcontractors. The contractor shall, however, remain fully liable and responsible for the work to be done by his subcontractor(s) and shall assure compliance with all requirements of the contract.

b. A list of names of the subcontractors or other person or organizations (including those who are to furnish materials or equipment fabricated to a special design) proposed for the principal portions of the work is to be submitted to the GVI within ten (10) days of notification of selection for the award of contract.

c. The contractor will be responsible to the GVI for all aspects of the work and may not subcontract under any circumstances more than forty-nine percent (49%) thereof.

4. Uniform Building Code

a. All work done will be in compliance with the current **Uniform Building Code** and all other applicable Virgin Islands code.

5. **Compliance with Copeland Act Requirements**

a. The Contractor and subcontractor shall comply with the requirements of the Copeland "Anti-Kick Back" Act (18 USC 874) as supplemented in Department of Labor Regulations (29 CPR, part 3).

6. **Equal Employment Opportunity**

a. The Contractor and subcontractor shall be in compliance with Executive Order 11246, entitled "Equal Employment Opportunity", as amended Executive Order 113754, and as supplemented in Department of Labor Regulations (41 CFR, Part 60).

7. **Contract Work Hours and Safety Standards Act**

a. The Contractor and subcontractor shall comply with regulations and standards of the Contract Work Hours and Safety Standards Act (40 USC 327-330) as supplemented by the Department of Labor Regulations (29 CFR, Part 5).

8. **Clean Air and Water Act (applicable to contracts in excess of $100,000.00)**

a. The Contractor and subcontractor shall comply with regulations issued by the United States Environmental Protection Agency (EPA), 40 CFR, Part 15, pursuant to the Clean Air Act, as amended ("Air Act"), 42 USC 7401, et Seq., the Federal Water Pollution Control Act) as amended ("Water Act"), 33 USC 1251, et. Seq., and Executive Order 11738.

9. **Examination and Retention of Contractor Records**

a. The Owner or Comptroller General of the United States, or any of their duly authorized representatives shall, until 3 years after fin'al payment under this contract, have access to and the right to examine any of the Contractor's directly pertinent book's, documents, papers, or other records involving transactions related to this contract for the purpose of making audit, examination, excerpts and transcripts.

10. **Confidential Material**

a. Any material submitted by the Bidder that is considered as confidential in nature must be clearly marked as such. In addition, Bidders must agree that all records and data associated with the GVI are to be considered proprietary and confidential.

Form P & P - A15-1-73
Approved 3-26-73
Revised 3-18-08
Comm. of Prop. & Proc.

AFFIDAVIT OF INDIVIDUAL SURETY

(See Instructions on Page 2)

STATE OF)
)
) ss:
COUNTY OF)
)
)

I, the person whose signature appears below as surety, being duly sworn, depose and say that I am one of the sureties to the attached bond; that I am a citizen of the United States (a Resident Alien who has declared his intention to become a Citizen of the United States,) and of full age and legally competent; that I am not a partner in the business of the principal on the bond or bonds on which I appear or may appear as surety; that the information herein below furnished is true and correct. This affidavit is made to induce the Government of the Virgin Islands to accept me as surety on the attached bond.

MY NAME (first, middle, last)	MY ADDRESS (street and number, city and State)
TYPE AND DURATION OF MY OCCUPATION	NAME OF MY EMPLOYER
MY BUSINESS ADDRESS (Street and number, city and State)	Amount I am worth in Real Estate and Personal Property over and above (1) All my debts and liabilities owing and incurred. (2) Any property exempt from execution (3) Any pecuniary interests I have in the business of the principal on said bond. And (4) Any interest I have in any so-called community property.

LOCATION AND DESCRIPTION OF REAL ESTATE OF WHICH I AM SOLE OWNER IN FEE SIMPLE (not exempt from seizure and sale under any homestead law, community or marriage law, or upon attachment, execution, or judicial process)

FAIR VALUE OF SUCH REAL ESTATE	ASSESSED VALUE OF SUCH REAL ESTATE FOR TAXATION PURPOSES

ALL MORTGAGES OR OTHER ENCUMBRANCES AGAINST ABOVE REAL ESTATE. THERE BEING NO OTHERS (if none, so state)

MY LIABILITIES OWING AND INCURRED DO NOT EXCEED THE AMOUNT OF	Amount I am worth in Real Estate and Personal Property over Personal property subject to execution and sale. This amount being additional to the real estate above described

THE ABOVE PERSONAL PROPERTY CONSISTS OF THE FOLLOWING

ALL OTHER BONDS ON WHICH I AM SURETY (state character and amount of each bond; if none; so state)

MY SIGNATURE AS SURETY

Subscribed and sworn to before me this date at .....

OFFICIAL SEAL

..... (Signature) ..... (Title of official administering oath) ..... (Date)

CERTIFICATE OF SUFFICIENCY

I HEREBY CERTIFY, that the surety named herein is personally known to me; that, in my judgment, said surety is responsible, and qualified to act as such; and that, to the best of my knowledge and belief, the facts stated by said surety in the foregoing affidavit are true.

NAME (typewritten)	SIGNATURE

OFFICIAL TITLE

ADDRESS

INSTRUCTIONS

1. This form shall be used whenever sureties on bonds to be executed in connection with Government contracts are individual sureties. There shall be no deviation from this form except as authorized by the Department of Property and Procurement.

2. A firm, as such, will not be accepted as a surety, nor a partner for copartners or for a firm of which he is a member. Stockholders of a corporate principal may be accepted as sureties provided their qualifications as such are independent of their stockholdings therein. Sureties, if individuals, shall be citizens of the United States or Resident Aliens who have declared their intention to become United States Citizen.

3. The individual surety shall justify, under oath, in a sum not less than the penalty of the bond, according to the form appearing on the face hereof, before a notary public, or some other officer having authority to administer oaths generally. If the officer has an official seal, it shall be affixed, otherwise the proper certificate as to his official character shall be furnished. Where citizenship is not required, as provided in paragraph 2 of these instructions, the affidavit may be amended accordingly.

4. The certificate of sufficiency shall be signed by an officer of a bank or trust company, under Oath by two persons not related to the surety.

5. By signing this affidavit, the individual surety agrees to assign to the Government of the Virgin Islands as security for performance by the Principal such real and/or personal property as the Government of the Virgin Islands shall designate having a fair market value of three times the bonded amount.

FORM - P&P-PB-20-73 APPROVED: 3-26-73 REVISED: 3-18-08 COMM. OF PROP & PROC.	**GOVERNMENT OF THE VIRGIN ISLANDS** **PERFORMANCE BOND** (See Instructions on Reverse)	DATE BOND EXECUTED

PRINCIPAL

SURETY

PENAL SUM OF BOND (Express in words and figures)	CONTRACT NO.	DATE OF CONTRACT

KNOW ALL MEN BY THESE PRESENTS, That we, the PRINCIPAL and SURETY above named, are held and firmly bound unto the Government of the Virgin Islands, hereinafter called the government, in the penal sum of the amount stated above, for the payment of which sum well and truly to be made, we bind ourselves, our heirs, executors, administrators, and successors, jointly and severally, firmly by these presents.

THE CONDITION OF THIS OBLIGATION IS SUCH, that whereas the principal entered into a certain contract with the Government, numbered and dated as shown above and hereto attached:

NOW THEREFORE, if the principal shall well and truly perform and fulfill all the undertakings, covenants, terms, conditions, and agreements of said contract duringthe original term of said contract and any extensions thereof that may be granted by the Government, with or without notice to the surety, and during the life of any guaranty required under the contract, and shall also well and truly perform and fulfill all the undertakings, covenants, terms, conditions, and agreements of any and all duly authorized modifications of said contract that may hereafter be made, notice of which modifications to the surety being hereby waived, then, this obligation to be void; otherwise to remain in full force and virtue.

IN WITNESS WHEREOF, the above-bounden parties have executed this instrument under their several seals on the date indicated above, the name and corporate seal of each corporate party being hereto affixed and these presents duly signed by its undersigned representative, pursuant to authority of its governing body.

In Presence of:

WITNESS		INDIVIDUAL PRINCIPAL	
1	as to	.....	[SEAL]
2	as to	.....	[SEAL]
3	as to	.....	[SEAL]
4	as to	.....	[SEAL]

WITNESS		INDIVIDUAL PRINCIPAL	
1	as to	.....	[SEAL]
2	as to	.....	[SEAL]

Attest	CORPORATE PRINCIPAL	
	BUSINESS ADDRESS	
	BY	AFFIX CORPORATE SEAL
	TITLE	
Attest	CORPORATE SURETY	
	BUSINESS ADDRESS	
	BY	AFFIX CORPORATE SEAL
	TITLE	

The rate of premium on this bond is ..... per thousand.

Total amount of premium charged, $ .....

(The above must be filled in by corporate surety)

CERTIFICATE AS TO CORPORATE PRINCIPAL

I,....., certify that I am the ..... secretary

of the corporation named as principal in the within bond, that .....

who signed the said bond on behalf of the principal, was then ..... of said corporation; that I know his/her signature, and his/her signature thereto is genuine; and that said bond was duly signed, sealed, and attested for and in behalf of said corporation by authority of its governing body.

[CORPORATE]
..... [SEAL]

INSTRUCTIONS

1 This form shall be used for construction work or the furnishing of supplies or services, whenever a performance bond is required. There shall be no deviation from this form except as authorized by the Department of Property and Procurement.

2 The surety on the bond may be any corporation authorized under the laws of the Government of the Virgin Islands any State or possession of the United States, or by the Secretary of the Treasury to act as surety, or two responsible individual sureties. Where individual sureties are used, this bond must be accompanied by a complete Affidavit of Individual Surety for each individual surety (Standard Form.)

3 The name; including full Christian name, and business or residence address of each individual party to the bond shall be inserted in the space provided therefor, and each such party shall sign the bond with his usual signature on the line opposite the scroll seal, and if signed in Maine or New Hampshire, an adhesive seal shall be affixed opposite the signature.

4 If the principals are partners, their individual names shall appear in the space provided therefor, with the recital that they are partners composing a firm, naming it, and all the members of the firm shall execute the bond as individuals.

5 If the principal or surety is a corporation, the name of the State in which incorporated shall be inserted in the space provided therefore, and said instrument shall be executed and attested under the corporate seal as indicated in the form. If the corporation has no corporate seal the fact shall be stated, in which case a scroll or adhesive seal shall appear following the corporate name.

6 The official character and authority of the person or persons executing the bond for the principal, if a corporation shall be certified by the secretary or assistant secretary, according to the form herein provided. In lieu of such certificate there may be attached to the bond copies of so much of the records of the corporation as will show the official character and authority of the officer signing, duly certified by the secretary or assistant secretary, under the corporate seal, to be true copies.

7 The date of this bond must not be prior to the date of the instrument in connection with which it is given.

FORM - P&P-PB-20-73 APPROVED 3-26-73 REVISED 3-18-08 COMM OF PROP & PROC.	**GOVERNMENT OF THE VIRGIN ISLANDS** **PAYMENT BOND** (See Instructions on Reverse)	DATE BOND EXECUTED

PRINCIPAL

SURETY

PENAL SUM OF BOND (Express in words and figures)	CONTRACT NO.	DATE OF CONTRACT

KNOW ALL MEN BY THESE PRESENTS, That we, the PRINCIPAL and SURETY above named, are held and firmly bound unto the Government of the Virgin Islands, hereinafter called the government, in the penal sum of the amount stated above, for the payment of which sum well and truly to be made, we bind ourselves, our heirs, executors, administrators, and successors, jointly and severally, firmly by these presents.

THE CONDITION OF THIS OBLIGATION IS SUCH, that whereas the principal entered into a certain contract with the Government, numbered and dated as shown above and hereto attached:

NOW THEREFORE, if the principal shall promptly make payment to all persons supplying labor and material in the prosecution of the work provided for in said contract, and any and all duly authorized modifications of said contract that may hereafter be made, notice of which modifications to the surety being hereby waived, then this obligation to be void; otherwise to remain in full force and virtue.

IN WITNESS WHEREOF, the above-bounden parties have executed this instrument under their several seals on the date indicated above, the name and corporate seal of each corporate party being hereto affixed and these presents duly signed by its undersigned representative, pursuant to authority of its governing body.

In Presence of:

WITNESS		INDIVIDUAL PRINCIPAL	
1	as to	.....	[SEAL]
2	as to	.....	[SEAL]
3	as to	.....	[SEAL]
4	as to	.....	[SEAL]

WITNESS		INDIVIDUAL PRINCIPAL	
1	as to	.....	[SEAL]
2	as to	.....	[SEAL]

Attest	CORPORATE PRINCIPAL	
	BUSINESS ADDRESS	
	BY	AFFIX CORPORATE SEAL
	TITLE	
Attest	CORPORATE SURETY	
	BUSINESS ADDRESS	
	BY	AFFIX CORPORATE SEAL
	TITLE	

The rate of premium on this bond is ..... per thousand.

Total amount of premium charged, $ .....

(The above must be filled in by corporate surety)

CERTIFICATE AS TO CORPORATE PRINCIPAL

....., certify that I am the ..... secretary

of the corporation named as principal in the within bond, that .....

who signed the said bond on behalf of the principal, was then ..... of said corporation; that I know his/her signature, and his/her signature thereto is genuine; and that said bond was duly signed, sealed, and attested for and in behalf of said corporation by authority of its governing body.

[CORPORATE]
..... [SEAL]

INSTRUCTIONS

1 This form, for the protection of persons supplying labor and material, shall be used whenever a payment bond is required. It may also be used in any other case in which a payment bond is to be required. There shall be no deviation from this form except as authorization by the Government of the Virgin Islands.

2 The surety on the bond may be any corporation authorized under the laws of the Government of the Virgin Islands any State or possession of the United States, or by the Secretary of the Treasury to act as surety, or two responsible individual sureties. Where individual sureties are used, this bond must be accompanied by a complete Affidavit of Individual Surety for each individual surety (Standard Form.)

3 The name; including full Christian name, and business or residence address of each individual party to the bond shall be inserted in the space provided therefor, and each such party shall sign the bond with his usual signature on the line opposite the scroll seal, and if signed in Maine or New Hampshire, an adhesive seal shall be affixed opposite the signature.

4 If the principals are partners, their individual names shall appear in the space provided therefor, with the recital that they are partners composing a firm, naming it, and all the members of the firm shall execute the bond as individuals.

5 If the principal or surety is a corporation, the name of the State in which incorporated shall be inserted in the space provided therefore, and said instrument shall be executed and attested under the corporate seal as indicated in the form. If the corporation has no corporate seal the fact shall be stated, in which case a scroll or adhesive seal shall appear following the corporate name.

6 The official character and authority of the person or persons executing the bond for the principal, if a corporation shall be certified by the secretary or assistant secretary, according to the form herein provided. In lieu of such certificate there may be attached to the bond copies of so much of the records of the corporation as will show the official character and authority of the officer signing, duly certified by the secretary or assistant secretary, under the corporate seal, to be true copies.

7 The date of this bond must not be prior to the date of the instrument in connection with which it is given.

RELEASE OF CLAIMS UNDER CONTRACT

WHEREAS, the terms of a contract dated _____, entered into by the Government of the Virgin Islands, represented by the **Department of Property & Procurement** Contracting Officer, and _____, a corporation organized and existing under the laws of the **U.S. Virgin Islands** with principal offices in _____, **St. Thomas, V.I.**, for the _____, state that: "Upon completion and acceptance of all work required hereunder, the amount due the contractor under this contract will be paid upon the presentation of a properly executed and duly certified voucher therefor, after the contractor shall have furnished the Government with a release, if required, of all claims against the Government arising under and by virtue of this contract, other such claims, if any, as may be specifically excepted by the contractor from the operation of the release in stated amounts to be set forth therein,"

NOW, THEREFORE, in consideration of the premises and the payment by the Government of the Virgin Islands to the contractor of the amount due under the contract the sum of _____, the contractor hereby remises, releases, and forever discharges the Government from all manner of debts, dues, sum or sums of money, accounts, claims, and demands whatsoever, in law and in equity, under or by virtue of the said contract and warrants good title to all materials, supplies and equipment installed or incorporated in the ..... and all work delivered in the premises, together with all improvements and appurtenances constructed thereon by ..... to the Government of the Virgin Islands free of any claims, liens, or charges; further, that neither it nor any person, firm or corporation furnishing any material or labor for any work covered by this contract has any unpaid expenses or wages for such material or labor nor has any right to a lien upon the premises or any improvements or appurtenances thereon.

IN WITNESS WHEREOF, the hand and seal of the contractor have been hereunto set this ..... day of ..... , 20.....

By .....

(seal)

I, _____, certify that I am the _____ of the corporation named as contractor herein; that _____, who signed this release on behalf of the corporation, was then _____of said corporation and that said release was duly signed for and on behalf of said corporation by authority of its governing body.

.....

Sworn to before me this date .....

.....

.....

Notary